higher education & training

Department:
Higher Education and Training
REPUBLIC OF SOUTH AFRICA

MARKING GUIDELINE

NATIONAL CERTIFICATE

APRIL-EXAMINATION

INDUSTRIAL ELECTRONICS N2

3 APRIL 2014

This marking guideline consists of 7 pages.

Copyright reserved

QUESTION 1

1.1 True

1.2 False

1.3 True

1.4 False

1.5 True

1.6 True

1.7 True

1.8 False

1.9 False

1.10 True

(10 x 1) **[10]**

TOTAL SECTION A: 10

SECTION B

QUESTION 2

2.1 2.1.1

$$R_{P1} = \frac{R_1 R_2}{R_1 + R_2} = \frac{1{,}5\times10^3 \times 3{,}3\times10^3}{1{,}5\times10^3 + 3{,}3\times10^3} = 1031{,}25\Omega \quad ✓✓$$

$$R_{S1} = R_{P1} + R_2 + R_4 + R_3$$
$$= 1031{,}25 + 560 + 680 + 220 \quad ✓✓$$
$$= 2491{,}25\Omega$$
$$R_T = \frac{R_{S1} R_6}{R_{S1} + R_6} = \frac{2491{,}25\times1{,}8\times10^3}{2491{,}25 + 1{,}8\times10^3} = 1045\Omega \quad ✓✓$$

(6)

2.1.2

$$I_T = \frac{V_T}{R_T} = \frac{50}{1045} = 0{,}048\text{A} \quad ✓✓$$

(2)

Copyright reserved

2.1.3 $$I_1 = \frac{R_{S1}}{R_{S1}+R_6} \times I_T = \frac{2491,25}{2491,25+1,8\times10^3} \times 0,048 = 0,028A$$ ✓ ✓ ✓ ✓ (4)

2.1.4 Green, Blue, Brown, Gold (2)

2.2 Current law:
The algebraic sum of currents flowing towards a junction is equal to the sum of the currents flowing away from that junction. ✓✓

Voltage law
In a closed loop, the algebraic sum of the emfs acting around the loop is equal to the algebraic sum of the potential differences around that loop i.e. the algebraic sum of all the emfs and the voltage drops is equal zero. ✓✓

(4)
[18]

QUESTION 3

3.1 3.1.1

$$e = E_m Sin\theta$$
$$= 22\,Sin942,6t$$
$$E_m = amplitude\ of\ wave$$
$$= 22V$$ ✓

(1)

✓

3.1.2 $E_m = 22\ V$ ✓ (1)

3.1.3 $\omega = 2\pi f = 942,6$

$$f = \frac{942,6}{2\pi} = 150\ Hz$$ ✓ ✓ (2)

3.1.4

$$e = 22\,Sin942,6t\ volts$$
$$= 22\times Sin942,6\times 2\times 10^{-3}\times 57,3$$
$$= 20,92IV$$ ✓ (2)

3.1.5

$$e = 22\,Sin\theta\ volts$$
$$= 22\times Sin\,45^o$$ ✓
$$= 15,556V$$ ✓ (2)

Copyright reserved

3.2 3.2.1 $X_L = 2\pi fL = 2\times\pi\times50\times3 = 942,478\Omega$ ✓✓ (2)

3.2.2 $Z = \sqrt{R^2 + (X_L)^2} = \sqrt{700^2 + (942,478)^2} = 1173,995\Omega$ ✓✓✓ (3)

3.2.3 $I = \frac{V}{Z} = \frac{200}{1173,995} = 0,170A$ OR $170mA$ ✓✓ (2)

3.2.4 $\theta = Cos^{-1}\frac{R}{Z} = Cos^{-1}\frac{700}{942,478} = 42,036^{O}$ ✓ ✓ ✓ (3)

[18]

QUESTION 4

4.1

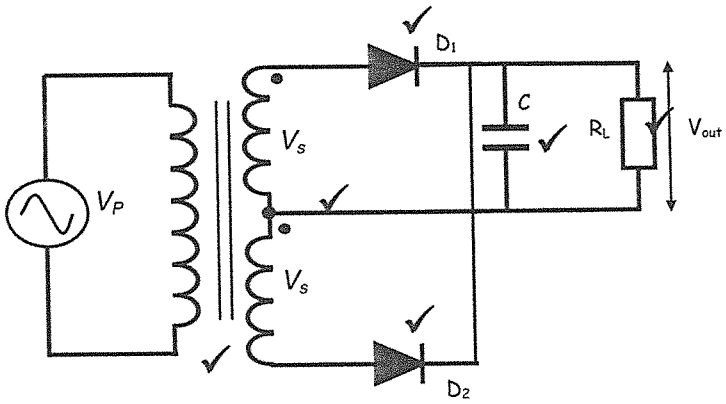

(6)

4.2 4.2.1



(2)

4.2.2

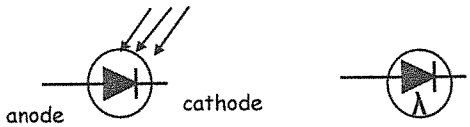

(2)

4.2.3

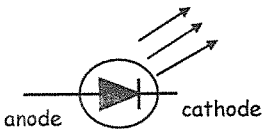

(2)

Copyright reserved

4.3 4.3.1 Pentavalent ∧

4.3.2 Four ∧

4.3.3 Covalent ∧

4.3.4 Four ∧

4.3.5 Fifth ∧

4.3.6 Covalent ∧

4.3.7 Electron ∧

4.3.8 Donor ∧

4.3.9 Donor ∧

4.3.10 Electron ∧

4.3.11 Electron ∧

4.3.12 Holes ∧ (6)
[18]

QUESTION 5

5.1

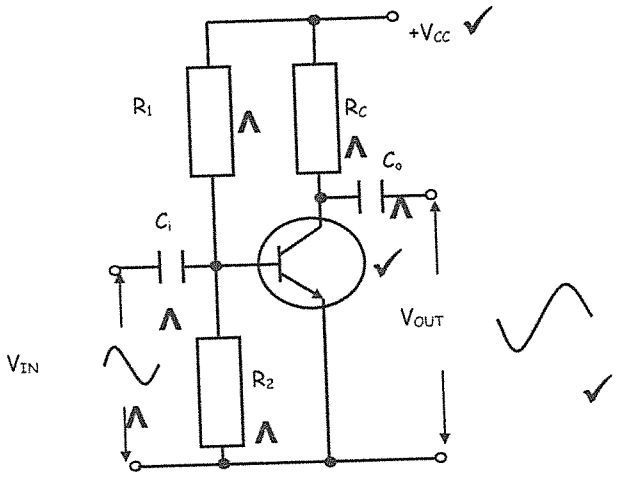

(6)

5.2 5.2.1 THE CUT-OFF REGION In this region both the collector-base and emitter-base are reverse-biased and only leakage current flows. The transistor is said to be in the 'off' state. (2)

5.2.2 THE ACTIVE REGION In this region the collector-base is reverse biased, the emitter-base is forward biased. In this area the transistor is used as an amplifier. (2)

Copyright reserved

5.2.3 THE SATURATION REGION In this region both the collector-base and emitter-base are forward biased. The transistor is fully 'on' and the voltage drop between collector and emitter is less than 0,6V. It is in this area that the transistor can be used as a switch. ✓ (2)

5.3 Physical quantity to be measured ✓
Accuracy required ✓
Converting principle which is most suitable. ✓ (3)

5.4 When a temperature difference exists between the hot junction and the cold junction, a potential difference is produced that causes a current to flow. When a meter is connected to the terminals of the cold-junction, the meter indication will be proportional to the difference in temperature between the hot- and cold-junctions. ✓ ✓✓ (3)
[18]

QUESTION 6

6.1

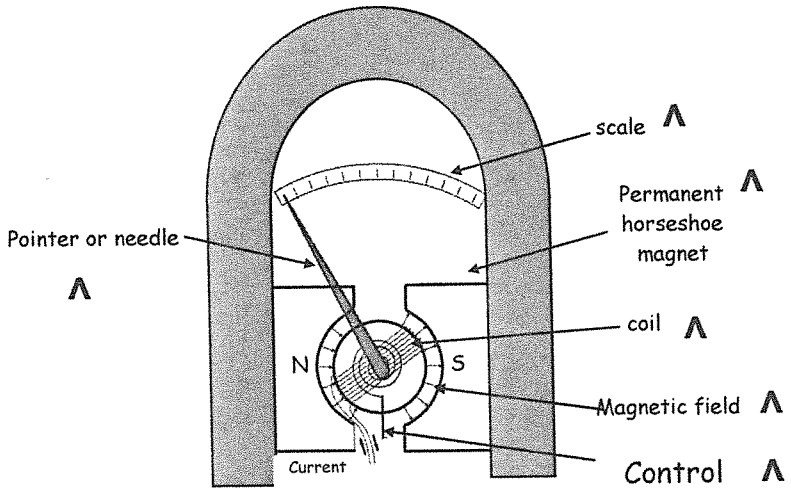

3 marks for labels
3 marks for sketch (6)

6.2 6.2.1 **Error! Objects cannot be created from editing field codes.** ✓✓✓ (3)

6.2.2

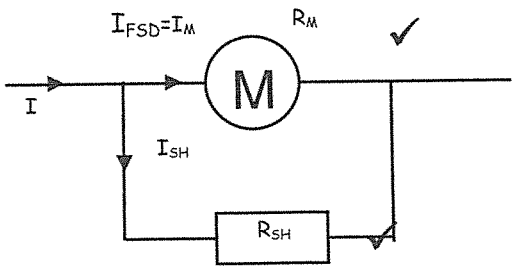

(2)

6.3

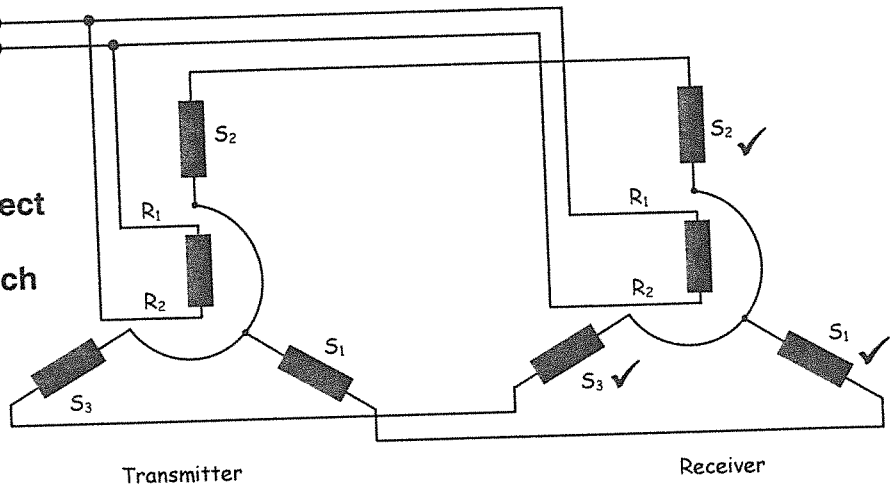

5 marks for correct connections
2 marks for sketch

(7)
[18]

TOTAL SECTION B: 90
GRAND TOTAL: 100

Copyright reserved