higher education & training

Department:
Higher Education and Training
REPUBLIC OF SOUTH AFRICA

T750**(E)**(A6)T

NATIONAL CERTIFICATE

INDUSTRIAL ELECTRONICS N1

(8080641)

29 July 2019 (X-Paper)
09:00–12:00

This question paper consists of 8 pages and 1 formula sheet.

Copyright reserved

DEPARTMENT OF HIGHER EDUCATION AND TRAINING
REPUBLIC OF SOUTH AFRICA

NATIONAL CERTIFICATE
INDUSTRIAL ELECTRONICS N1
TIME: 3 HOURS
MARKS: 100

INSTRUCTIONS AND INFORMATION

1. Answer ALL the questions.
2. Read ALL the questions carefully.
3. Number the answers according to the numbering system used in this question paper.
4. Keep subsections of questions together.
5. Take π as 3,142.
6. Start each question on a NEW page.
7. Sketches must be large, neat and fully labelled.
8. Write neatly and legibly.

Copyright reserved

QUESTION 1

1.1 Choose a term from COLUMN B that matches a description in COLUMN A. Write only the letter (A–P) next to the question number (1.1.1–1.1.10) in the ANSWER BOOK.

COLUMN A		COLUMN B	
1.1.1	Atom with THREE valence electrons	A	hydrometer
1.1.2	Majority charge carriers found in N-type materials	B	direct current
1.1.3	Instrument used to measure current flow	C	conductor
1.1.4	Current flowing in both directions	D	doping
1.1.5	Materials with few or no free electrons	E	transformer
1.1.6	Process of adding impurities to intrinsic semiconductor materials	F	trivalent
1.1.7	Electronic component normally used for rectification	G	holes
1.1.8	Component working on the principle of mutual induction	H	semiconductor
1.1.9	Not a good conductor or good insulator in pure state	I	henry
1.1.10	Unit of measurement for inductance	J	ammeter
		K	pentavalent
		L	insulator
		M	electrons
		N	diode
		O	transistor
		P	alternating current

(10 × 1) (10)

1.2 Refer to FIGURE ONE and determine each of the values below.

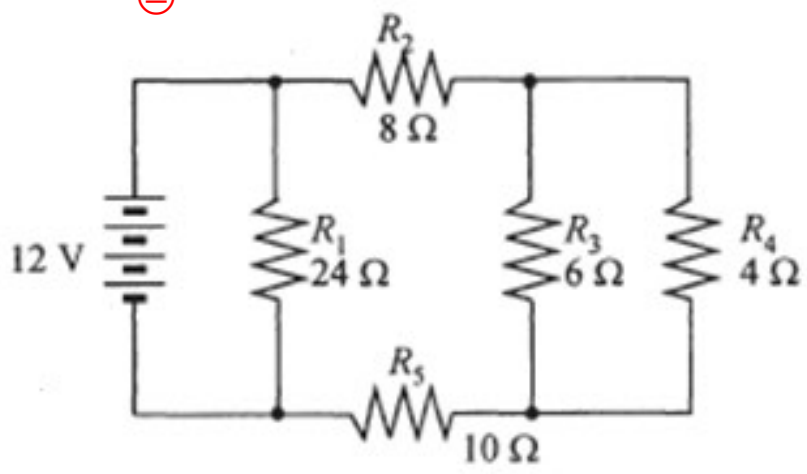

FIGURE 1

1.2.1 Total resistance of circuit (8)

1.2.2 Current flow through whole circuit (3)

1.2.3 Total power dissipated by circuit (3)

1.3 Give the colour code for resistor R_3 (6 Ω) which has a tolerance of 1%. (3)
[27]

QUESTION 2

2.1 Three identical cells with a combined emf of 4,5 volts and a total internal resistance of 1,5 ohms are connected to one another in series. This battery is then connected across an external resistor with a value of 25 Ω.

Calculate each of the following values:

2.1.1 Internal resistance of ONE cell (2)

2.1.2 Total resistance of circuit (2)

2.1.3 Current flow through circuit (3)

2.1.4 Voltage drop across external resistor (3)

2.2 A conductor has a resistance of 5 Ω at a temperature of 0 °C.

Calculate the resistance if the temperature increases to 60 °C and the conductor has a coefficient of 0,0059 Ω/°C. (3)

2.3 State FOUR factors that affect the strength of an electromagnet. (4)

Copyright reserved

2.4 Sketch the IEC symbols for each of the following components:

2.4.1 Variable inductor

2.4.2 Preset capacitor

2.4.3 Rheostat

2.4.4 Auto transformer

2.4.5 Potentiometer

(5 × 1) (5)

2.5 State THREE advantages of primary cells. (3)
[25]

QUESTION 3

3.1 Various options are given as possible answers to the following questions. Choose the answer and write only the letter (A–D) next to the question number (3.1.1–3.1.10) in the ANSWER BOOK.

3.1.1 Rectifier diodes conduct when …

A the P-type material is connected to the positive supply and the N-type to the negative supply.
B the P-type and N-type materials are connected to the positive supply.
C the N-type material is connected to the positive supply and the P-type to the negative supply.
D the diode is reverse biased.

3.1.2 Potential difference is measured with an instrument called a …

A voltmeter.
B amperemeter.
C wattmeter.
D ohmmeter.

3.1.3 A disadvantage of an analogue multimeter is that …

A the ohm scale is linear.
B the pointer has to be zeroed each time it is used.
C there are no errors of parallax.
D it switches off when not in use (auto shut-off feature).

Copyright reserved

3.1.4 Semi-conductor materials have …

A six valence electrons.
B eight valence electrons.
C no valence electrons.
D four valence electrons.

3.1.5 An insulator …

A is an element that allows current to flow because it has many free electrons.
B is an element that has an abundance of protons.
C allows current to flow because it forms metallic bonds.
D does not allow current to flow because it has no free electrons.

3.1.6 The colour code for a 6 Ω-resistor with a 2% tolerance value is …

A blue; black; black; silver.
B blue; brown; black; silver.
C blue; black; gold; red.
D blue; black; gold; silver.

3.1.7 An atom becomes an ion when it …

A forms ionic bonds.
B combines with other atoms to form covalent bonds.
C gains or loses electrons.
D becomes polarised.

3.1.8 The junction voltage of silicon is approximately …

A 0,07 volts.
B 0,7 volts.
C 0,2 volts.
D 0,02 volts.

3.1.9 A bipolar NPN transistor has …

A two junctions.
B three junctions.
C one barrier layer.
D no junctions.

3.1.10 The … is a factor that can affect capacitance.

A temperature
B thickness of the plates
C dielectric constant
D resistance of the plates

(10 × 1) (10)

Copyright reserved

3.2 The resistance of a silver conductor is 10 Ω.

Calculate the length of the conductor if the cross-sectional area is 0,000010 m^2 and the specific resistance of silver is 0,0159 μΩm. (4)

3.3 Name the FOUR factors that influence the resistance of a conductor. (4)

3.4 Explain how each factor in QUESTION 3.3 influences the resistance. (4 × 2) (8)

[26]

QUESTION 4

4.1 Choose the correct word or words from those given in brackets. Write only the word or words next to the question number (4.1.1–4.1.10) in the ANSWER BOOK.

4.1.1 Transformers have no moving parts and are regarded as having (no losses/high losses) when in operation.

4.1.2 The term *lattice structure* refers to (insulators/semiconductors).

4.1.3 A (digital/analogue) measuring instrument is accurate and easy to use.

4.1.4 A zener diode is a (voltage regulator/current regulator).

4.1.5 A hydrometer is normally used to measure (relative density/specific resistivity).

4.1.6 Energy is the (rate/ability) of doing work.

4.1.7 A bipolar diode has (one/two/three) junctions.

4.1.8 An atom that has lost electrons is known as a (conductor/ion/proton).

4.1.9 Like or similar poles of a bar magnet (repel/attract) each other.

4.1.10 When the resistance of a conductor increases with a rise in temperature it is regarded as having a (positive/negative) temperature coefficient.

(10 × 1) (10)

4.2 4.2.1 Make a neat, fully labelled sketch of an atom with an atomic number of ELEVEN. (6)

4.2.2 Does the atom in QUESTION 4.2.1 represent a conductor or an insulator? (1)

Copyright reserved

4.3 Indicate whether the following statements are TRUE or FALSE. Choose the answer and write only 'True' or 'False' next to the question number (4.3.1–4.3.5) in the ANSWER BOOK.

4.3.1 A cell can also be referred to as a battery.

4.3.2 Primary cells are used in the manufacturing of a lead-acid battery.

4.3.3 Transistors are used for rectification purposes.

4.3.4 Cells must be connected in series with one another in order to increase the current capacity of a battery.

4.3.5 The colour code of a 9 Ω resistor with a tolerance value of 20% is white; black; black; no colour.

(5 × 1) (5)
[22]

TOTAL: 100

Copyright reserved

INDUSTRIAL ELECTRONICS N1

FORMULA SHEET

$$V = I \times R$$

$$P = \frac{V^2}{R}$$

$$P = I^2 R$$

$$P = V \times I$$

$$I = \frac{E}{R + r}$$

$$Q = C \times V$$

$$R = \frac{\rho \ell}{A}$$

$$R_t = R_o(1 + \alpha_o \Delta t)$$

$$R_t = R_1 + R_2 + R_3 ..... R_n$$

$$C_t = C_1 + C_2 + C_3 ..... C_n$$

$$L_t = L_1 + L_2 + L_3 ..... L_n$$

$$\frac{1}{C_t} = \frac{1}{C_1} + \frac{1}{C_2} + \frac{1}{C_3} ..... \frac{1}{C_n}$$

$$\frac{1}{R_t} = \frac{1}{R_1} + \frac{1}{R_2} + \frac{1}{R_3} ..... \frac{1}{R_n}$$

$$\frac{1}{L_t} = \frac{1}{L_1} + \frac{1}{L_2} + \frac{1}{L_3} ..... \frac{1}{L_n}$$

$$\frac{V_p}{V_s} = \frac{N_p}{N_s} = \frac{I_s}{I_p}$$

Copyright reserved