higher education & training

Department:
Higher Education and Training
REPUBLIC OF SOUTH AFRICA

NASIENRIGLYN

NASIONALE SERTIFIKAAT

INDUSTRIËLE INSTRUMENTE N5

12 APRIL 2018

Hierdie nasienriglyn bestaan uit 8 bladsye.

Kopiereg voorbehou

AFDELING A: FLOW MEASUREMENTS

VRAAG 1

1.1 C
1.2 D
1.3 D
1.4 B
1.5 C
1.6 A
1.7 C
1.8 B

(8 × 1) **[8]**

VRAAG 2

2.1 2.1.1

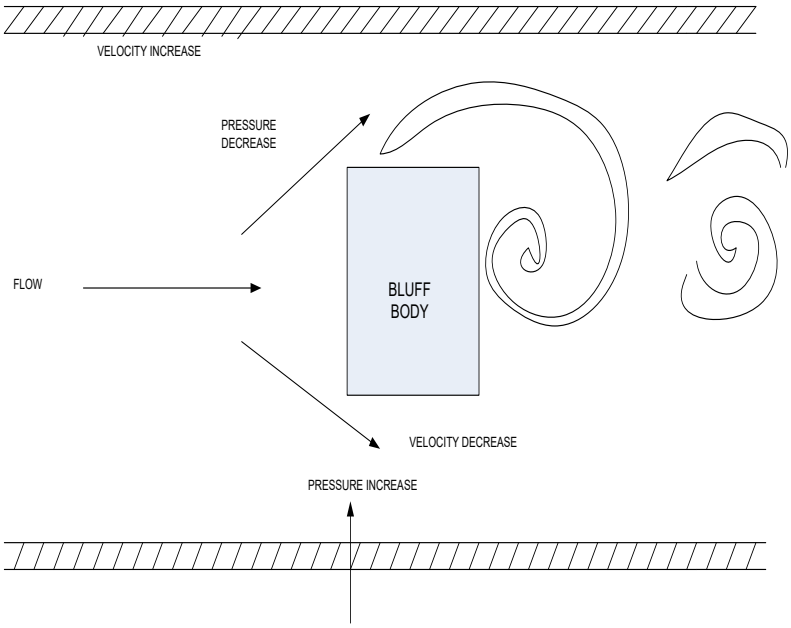

(6)

2.1.2
- Liquid suspension
- Steam measurements
- Natural gas measurement
- Liquid chemicals (Any 3 × 1) (3)

2.2 2.2.1
A
B
C
D (4)

2.2.2 Externally heated tube/External elements and heater (2)

2.3 2.3.1

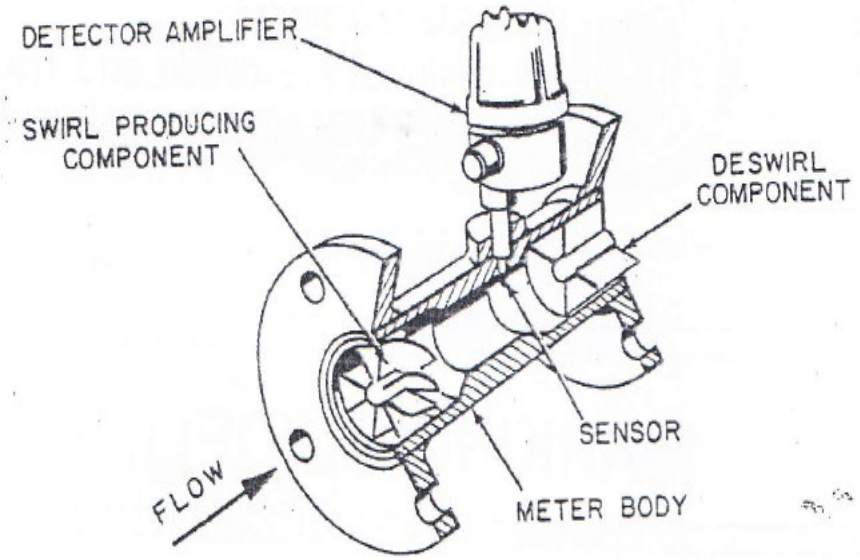
DETECTOR AMPLIFIER
SWIRL PRODUCING COMPONENT
DESWIRL COMPONENT
SENSOR
METER BODY
FLOW

OR

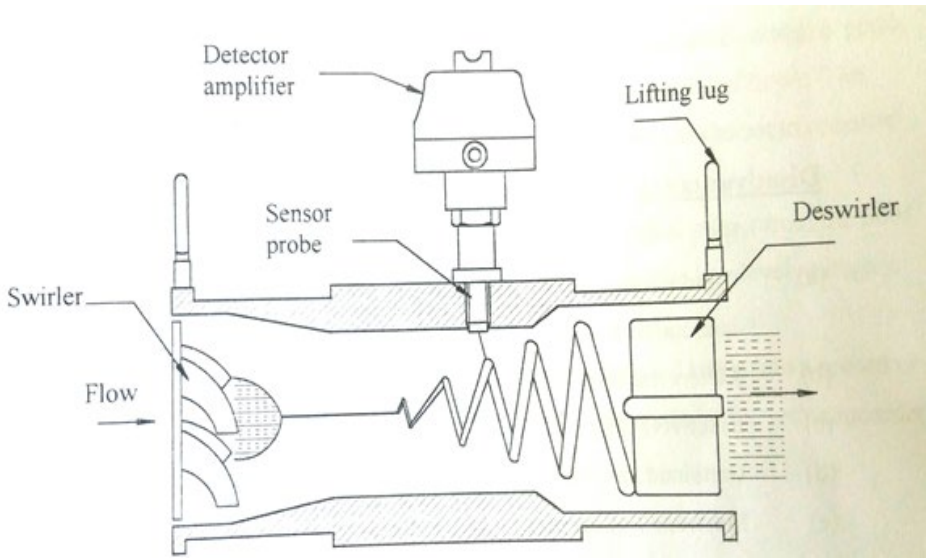
Detector amplifier
Lifting lug
Sensor probe
Deswirler
Swirler
Flow

(6)

2.3.2 Advantages
- No moving parts
- Low-pressure losses
- High accuracy

Disadvantages
- Expensive
- In-mounting requirement
- Not accurate in slurry application (3 + 3) (6)

[27]

TOTAL AFDELING A: 35

AFDELING B: DENSITY, HUMIDITY AND VISCOSITY MEASUREMENT

VRAAG 3

3.1

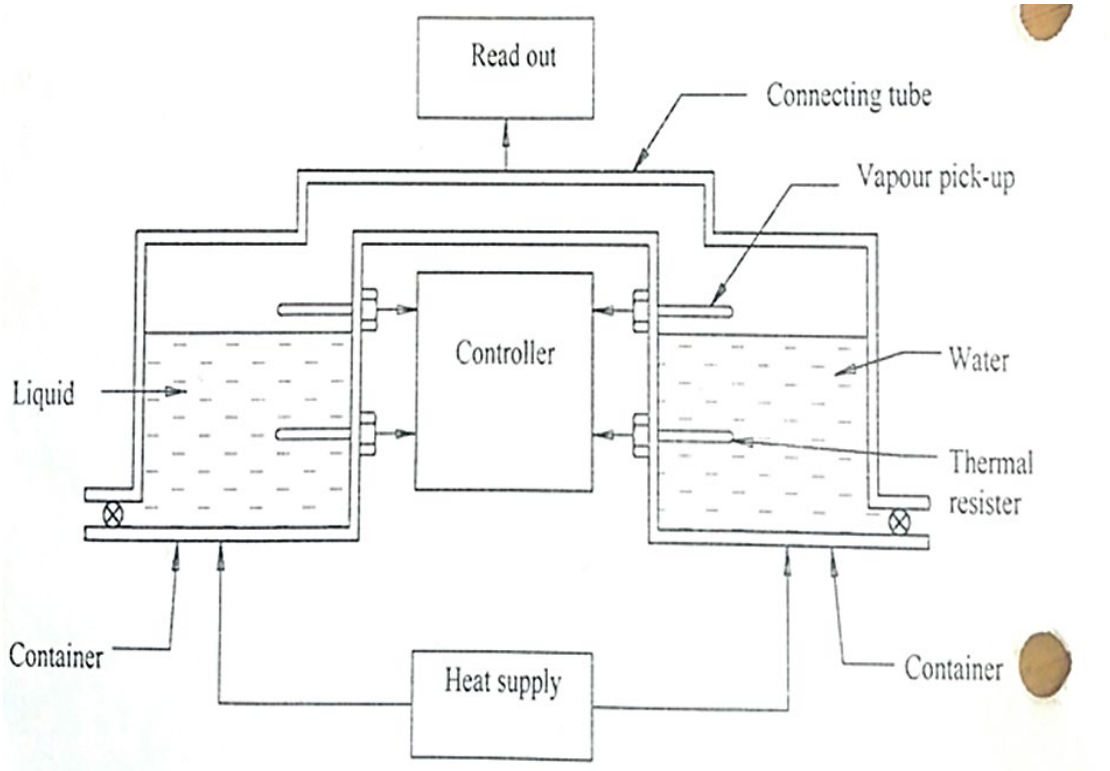

- Liquid and water must be boiled.✓
- When liquid and water starts to boil, vapour will be formed.✓
- This vapour will be picked up and sent to the controller to record the temperature measured with a thermal resister.✓
- If the temperature of the liquid at boiling point differs from the boiling point of the water, the difference in temperature will be directly proportional to the density of the liquid.✓
- The pressure of both containers is kept constant with a connecting tube connecting the container.✓ (10)

3.2

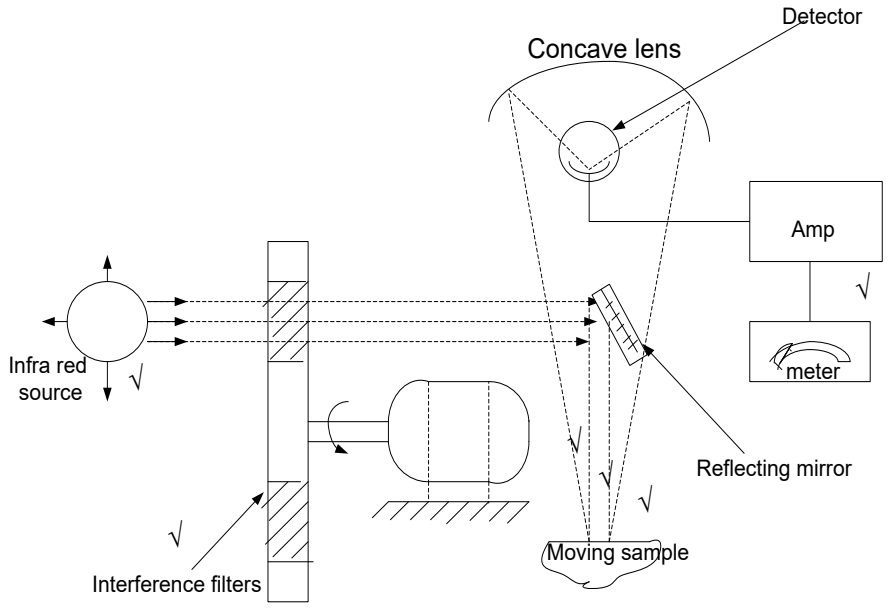

- The instrument consists of a light source, filters to separate the measuring and reference wave lengths, lenses to concentrate the beam on the sample and a concave mirror to reflect the beam onto a photocell.✓
- The reference filter will measure a specific wavelength and will be compared with a measured wavelength obtained from the measuring lens.✓
- These wavelengths will be picked up by the photocell and induce two current pulses.✓
- The relation between the two signals will be a function of the vapour present on the surface of the sample.✓ (10)

3.3

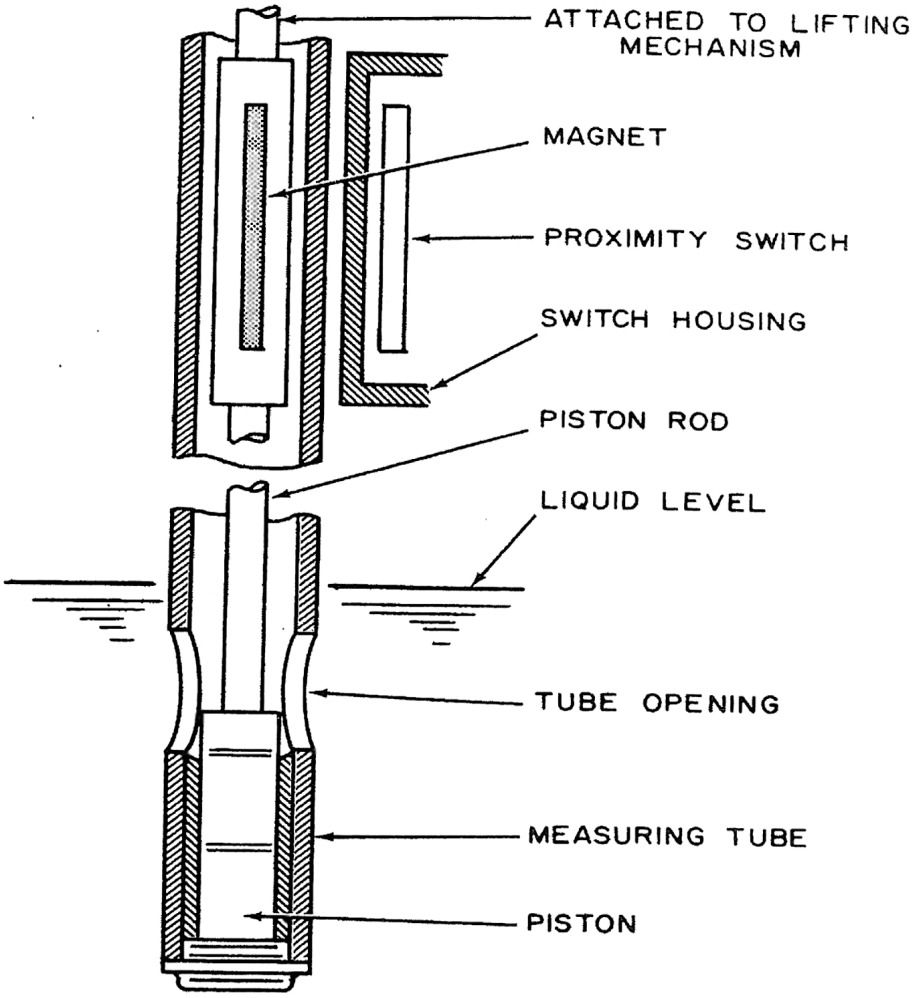

(9)
[29]

TOTAL AFDELING B: 29

AFDELING C: pH MEASUREMENT

VRAAG 4

4.1 $pH_1 = \log(\frac{1}{0,15}) = 0,824$✓

$pH_2 = \log(\frac{1}{(0,0025}) = 2,6$✓

Change in pH = 0,824 – 2,6✓
= -1,776✓ (4)

4.2 4.2.1 A conductivity cell constant is a function of the area of the electrodes,✓ the distance between the electrodes✓ and the electric field pattern between the electrodes.✓ (3)

4.2.2 The electrodes acquire a certain surface potential✓ due to loss or gain of electrons✓ when an electric current is passed between electrodes in a solution of electrolysis.✓ (3)

4.3

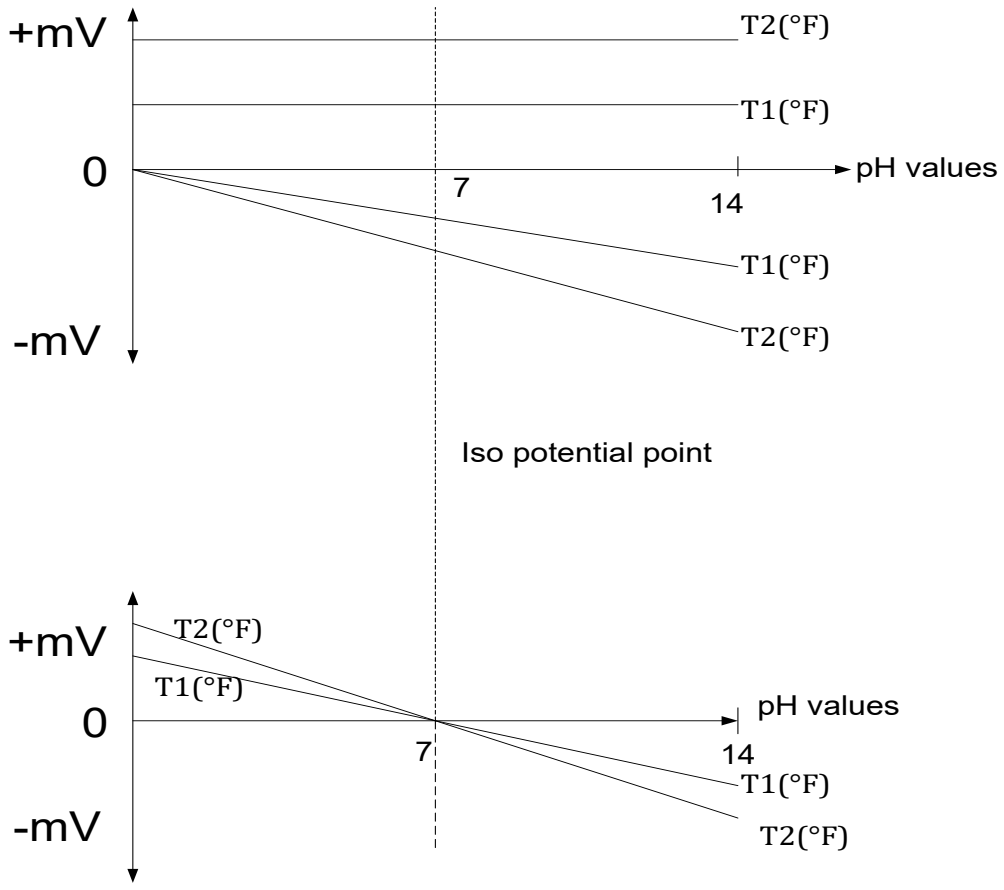

(10)
[20]

TOTAL AFDELING C: 20

AFDELING D: AUTOMATIC CONTROL

VRAAG 5

5.1 5.1.1
- All four bellows will have the same pressure.
- The motion pin will be on its true centre line.
- No control actions will be generated. (3)

5.1.2
- The output will increase by ±10 kPa if the gain is direct or decrease by ±10 kPa should the gain be indirect.✓
- This would be due to a pressure increase in the process bellows while the pressure in the other bellows stays constant.✓
- The motion pin will move off its centre line causing the flapper to move either towards or away from the nozzle.✓
- This should cause the nozzle feedback pressure to either increase or decrease, thus causing the output to change accordingly.✓ (4)

5.1.3 $PB = \frac{100}{\text{gain}} = \frac{100}{1{,}0} = 100$✓ (1)

5.1.4 By swivelling the gain adjustment dial from direct to reverse (1)

5.2

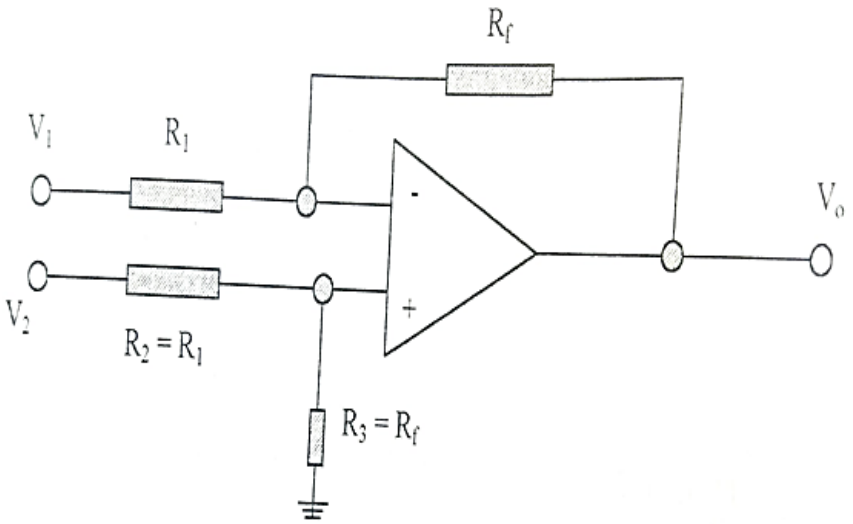

(4)

5.3
- Wheatstone bridge
- Linear variable differential transformer
- Linear variable capacitive transducer (3)

[16]

TOTAL AFDELING D: 16
GRAND TOTAL: 100

Kopiereg voorbehou