higher education & training

Department:
Higher Education and Training
REPUBLIC OF SOUTH AFRICA

NATIONAL CERTIFICATE:
MULTIDISCIPLINARY DRAWING OFFICE PRACTICE

GENERAL DRAUGHTING

(8090194)

2 December 2019 (X-Paper)
09:00–13:00

CLOSED-BOOK EXAMINATION

REQUIREMENTS: ONE A2 drawing sheet

Calculators may be used.

This question paper consists of 3 pages and 5 diagram sheets.

Copyright reserved

DEPARTMENT OF HIGHER EDUCATION AND TRAINING
REPUBLIC OF SOUTH AFRICA

NATIONAL CERTIFICATE:
MULTIDISCIPLINARY DRAWING OFFICE PRACTICE
GENERAL DRAUGHTING
TIME: 4 HOURS
MARKS: 100

INSTRUCTIONS AND INFORMATION

1. Answer ALL the questions.
2. Read ALL the questions carefully.
3. Number the answers according to the numbering system used in this question paper.
4. ALL drawing work must conform to the latest SABS 0111 Code of Practice.
5. Estimate ALL dimensions NOT shown in reasonable proportion.
6. Unspecified radii must be 3 mm.
7. Work neatly.

Copyright reserved

QUESTION 1: GEOMETRIC CONSTRUCTION

FIGURE 1, DIAGRAM SHEET 1 (attached), shows a front view of a crane hook.

Draw, to scale 1:1, the given view. Insert any 10 dimensions. Show ALL geometric construction lines. Print the following title and scale centred beneath the view:

CRANE HOOK
SCALE 1:1 **[25]**

QUESTION 2: DEVELOPMENT

FIGURE 2, DIAGRAM SHEET 2 (attached), shows a sheet-metal fitting.

2.1 Draw, to scale 1:1, the given view.

2.2 Develop the sheet-metal fitting. The starting point of the development is at a-a.

Show ALL projection lines and numbering. **[20]**

QUESTION 3: INTERPENETRATION CURVE

FIGURE 3, DIAGRAM SHEET 3 (attached), shows the front and top views of a rod end.

Draw the given views of the rod end in first-angle orthographic projection and complete the elevations with the interpenetration curve. Show ALL construction lines. **[15]**

QUESTION 4: THE LOCI

FIGURE 4, DIAGRAM SHEET 4 (attached), shows half of a hexagon and a semicircle. A piece of string is tied at point A and tightly wound around the hexagon and the semicircle in an anticlockwise direction.

Trace the locus of the end as it fully unwinds in a clockwise direction. **[15]**

QUESTION 5: ORTHOGRAPHIC PROJECTION

FIGURE 5, DIAGRAM SHEET 5 (attached), shows a truncated hexagon pipe which in turn rests on a truncated rectangular prism with a length of 60 mm.

Draw, to scale 1:1, the following views in third-angle orthographic projection:

5.1 The given front view and the auxiliary view

5.2 A left view

5.3 A top view

Show ALL hidden details. **[25]**

TOTAL: 100

Copyright reserved

DIAGRAM SHEET 1

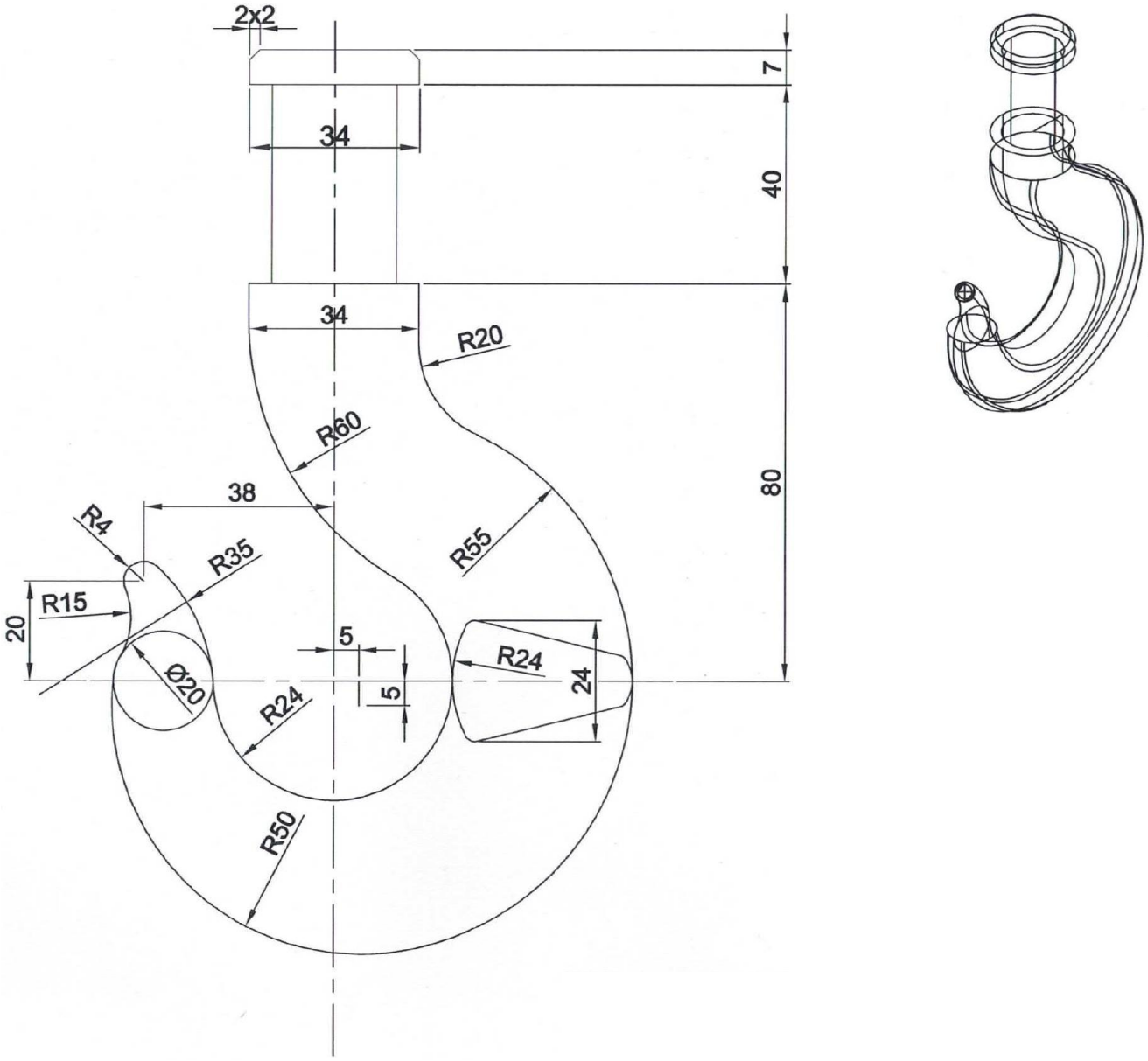

FIGURE 1

Copyright reserved

DIAGRAM SHEET 2

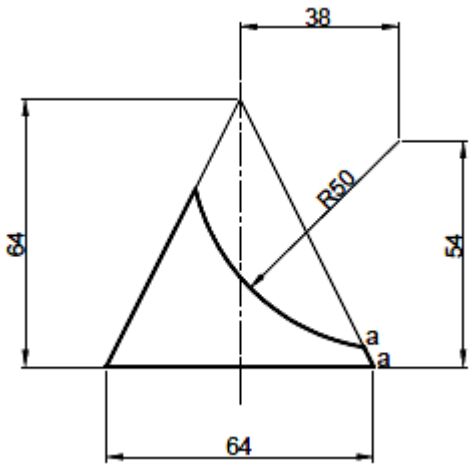

FIGURE 2

Copyright reserved

DIAGRAM SHEET 3

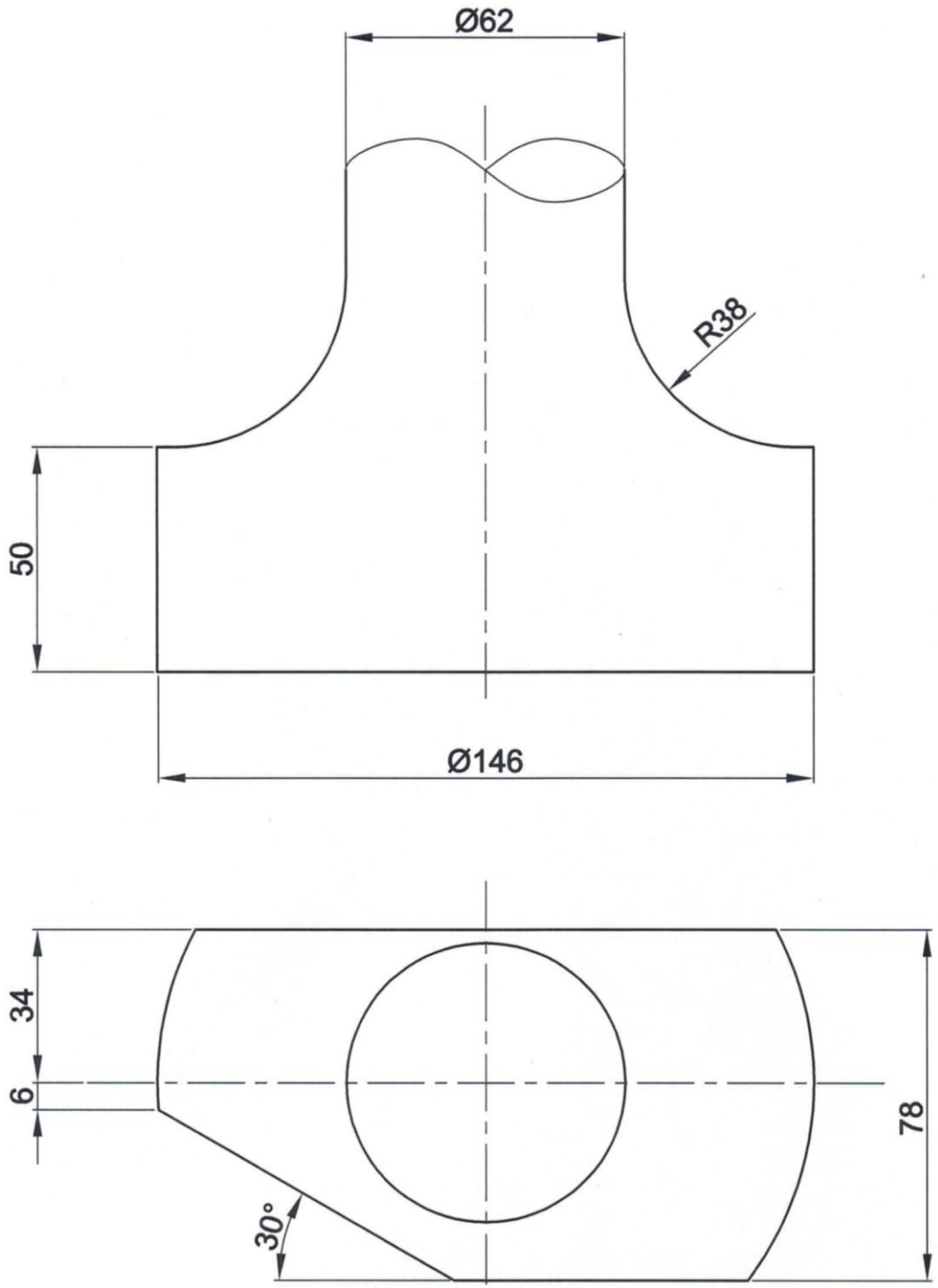

FIGURE 3

Copyright reserved

DIAGRAM SHEET 4

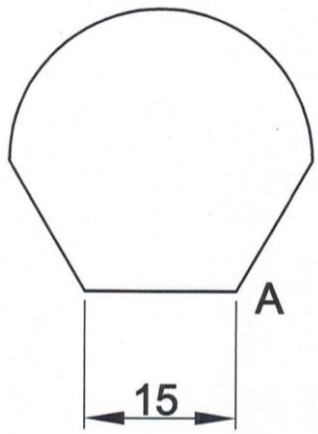

FIGURE 4

Copyright reserved

DIAGRAM SHEET 5

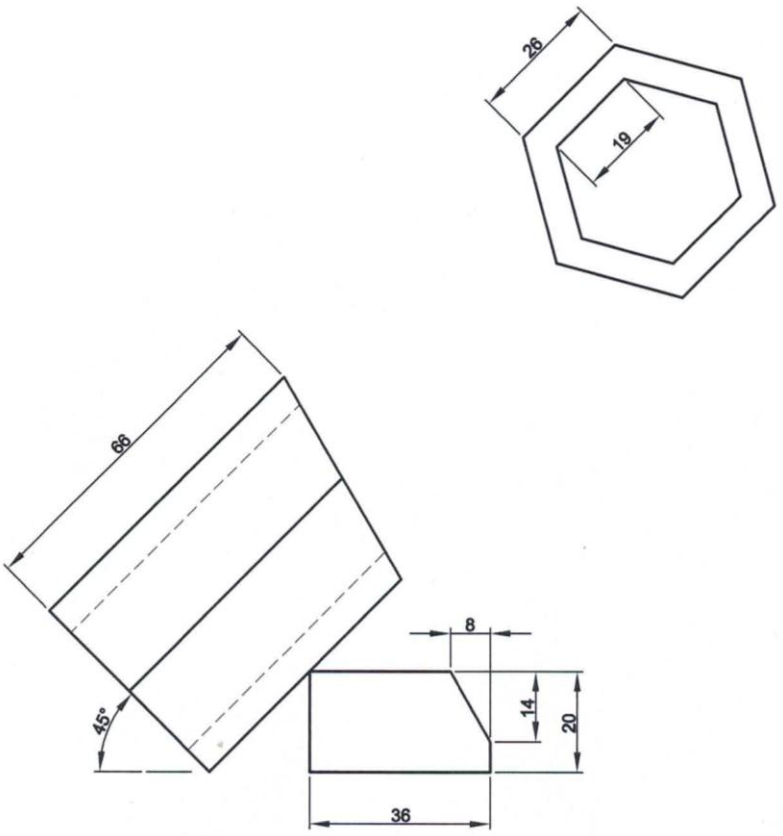

FIGURE 5

Copyright reserved