higher education & training

Department:
Higher Education and Training
REPUBLIC OF SOUTH AFRICA

NATIONAL CERTIFICATE: MULTI-DISCIPLINARY DRAWING OFFICE PRACTICE

GENERAL DRAUGHTING

(8090194)

13 August 2021 (X-paper)
09:00–13:00

REQUIREMENTS: **ONE A2 drawing sheet**

CLOSED-BOOK EXAMINATION

Drawing instruments and nonprogrammable calculators may be used.

This question paper consists of 4 pages and a diagram sheet of 5 pages.

309Q1G2113

Copyright reserved

DEPARTMENT OF HIGHER EDUCATION AND TRAINING
REPUBLIC OF SOUTH AFRICA

NATIONAL CERTIFICATE: MULTI-DISCIPLINARY
DRAWING OFFICE PRACTICE
GENERAL DRAUGHTING
TIME: 4 HOURS
MARKS: 100

INSTRUCTIONS AND INFORMATION

1. Answer all the questions.
2. Read the questions carefully before attempting to answer them.
3. Use both sides of the DRAWING SHEET.
4. A balanced layout is very important and candidates will be penalised for poor planning.
5. A 15-mm border must be drawn around the drawing sheet (on both sides).
6. The question numbers must be clearly indicated.
7. All drawing work, including candidate information, must be completed in pencil on the A2 drawing sheet.
8. All drawing work must comply with the SABS 0111-1990 code of practice.
9. On completion, fold the A2 sheet to A4 size with the examination number visible on the front.
10. Use own discretion for dimensions not given.
11. Use a 3 mm fillet radius for all radii not given.
12. Work neatly.

Copyright reserved

QUESTION 1: LOCI

FIGURE 1 on the DIAGRAM SHEET (attached) shows a hexagon and a square with a piece of string that has been wound tightly around the square in an anti-clockwise direction from B to A. Point B is fixed. Draw to scale 1:1 the locus of point A as it is unwound in a clockwise direction until point A touches the square.

Show ALL construction lines. **[15]**

QUESTION 2: ORTHOGRAPHIC PROJECTION

FIGURE 2 on the DIAGRAM SHEET (attached) shows a cylinder with a hexagonal prism hole, resting on a truncated octagonal prism. Draw in first-angle orthographic projection using scale 1:1 the following views:

2.1 The given front view (5)

2.2 The left view (10)

2.3 The top view (10)

Show only the hidden details of the hexagonal hole. Place the symbol for first-angle orthographic projection centrally beneath the layout.

HINT: Start your drawing from the top view of the truncated octagonal prism.

[25]

QUESTION 3: GEOMETRIC CONSTRUCTION

FIGURE 3 on the DIAGRAM SHEET (attached) shows a front view of a piston and crank. Draw to scale 1:1 the given view.

Insert any THREE linear dimensions and any TWO diametrical dimensions to the finished drawing.

Print the following title and scale centrally beneath the drawing:

PISTON AND CRANK

SCALE 1:1 **[25]**

Copyright reserved

QUESTION 4: DEVELOPMENT

FIGURE 4 on the DIAGRAM SHEET (attached) shows a truncated square-based pyramid that is open at both ends.

4.1 Draw the given views to scale 1:1. (6)

4.2 Draw the pattern of the truncated pyramid. The starting point for your pattern is at PP. (14)

[20]

QUESTION 5: INTERPENETRATION

FIGURE 5 on the DIAGRAM SHEET (attached) shows two views of a fork end. Draw using scale 1:1 the front view and top view and complete the curve of interpenetration.

ALL construction lines must be shown to project the curve of interpenetration. **[15]**

TOTAL: 100

Copyright reserved

DIAGRAM SHEET

QUESTION 1

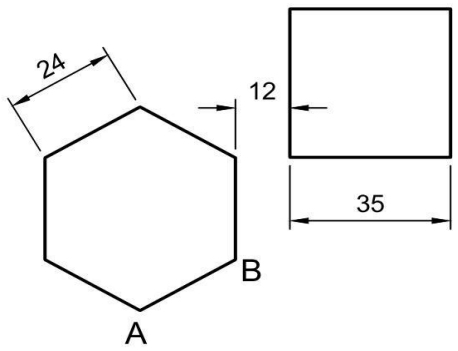

FIGURE 1

Copyright reserved

QUESTION 2

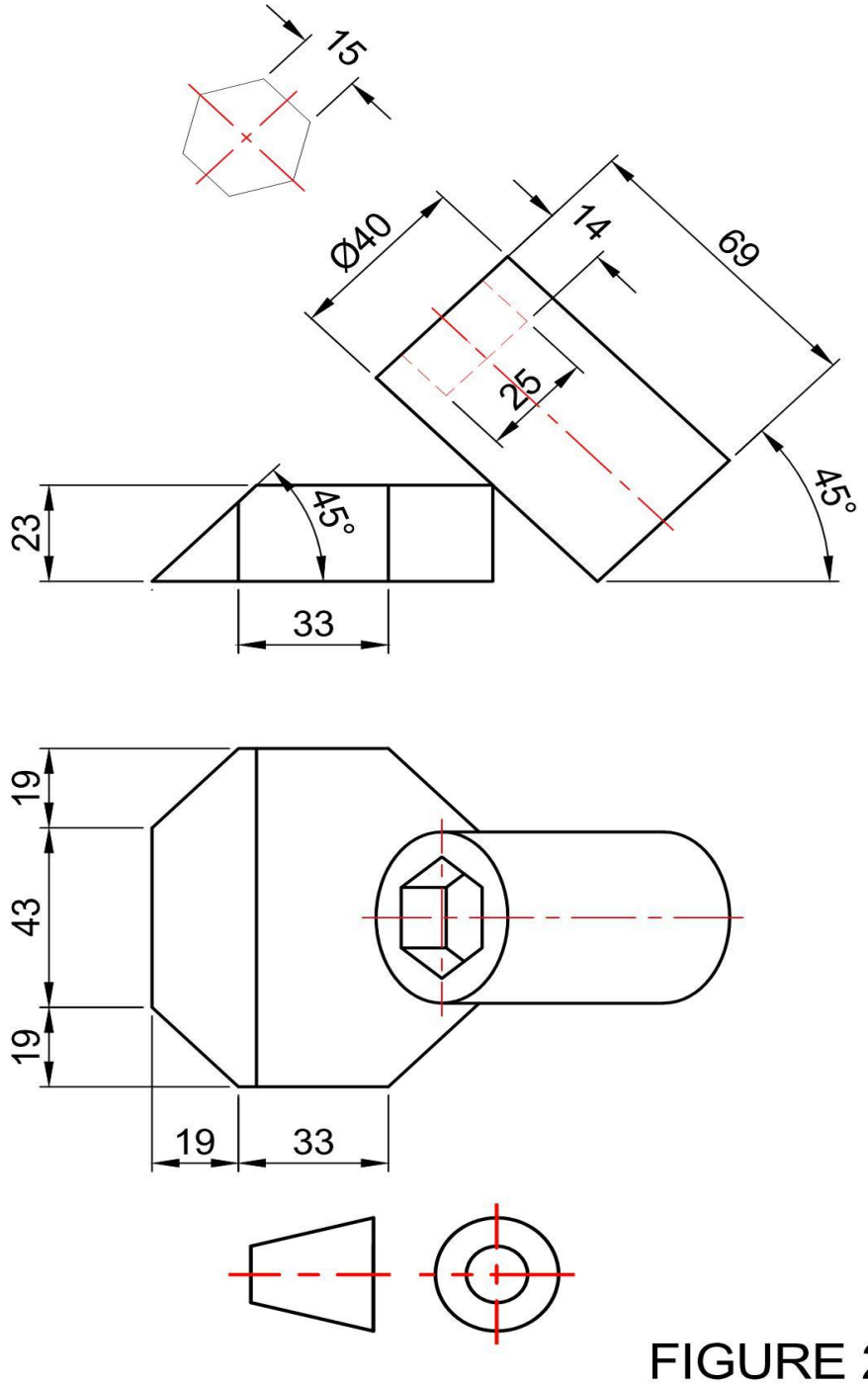

FIGURE 2

Copyright reserved

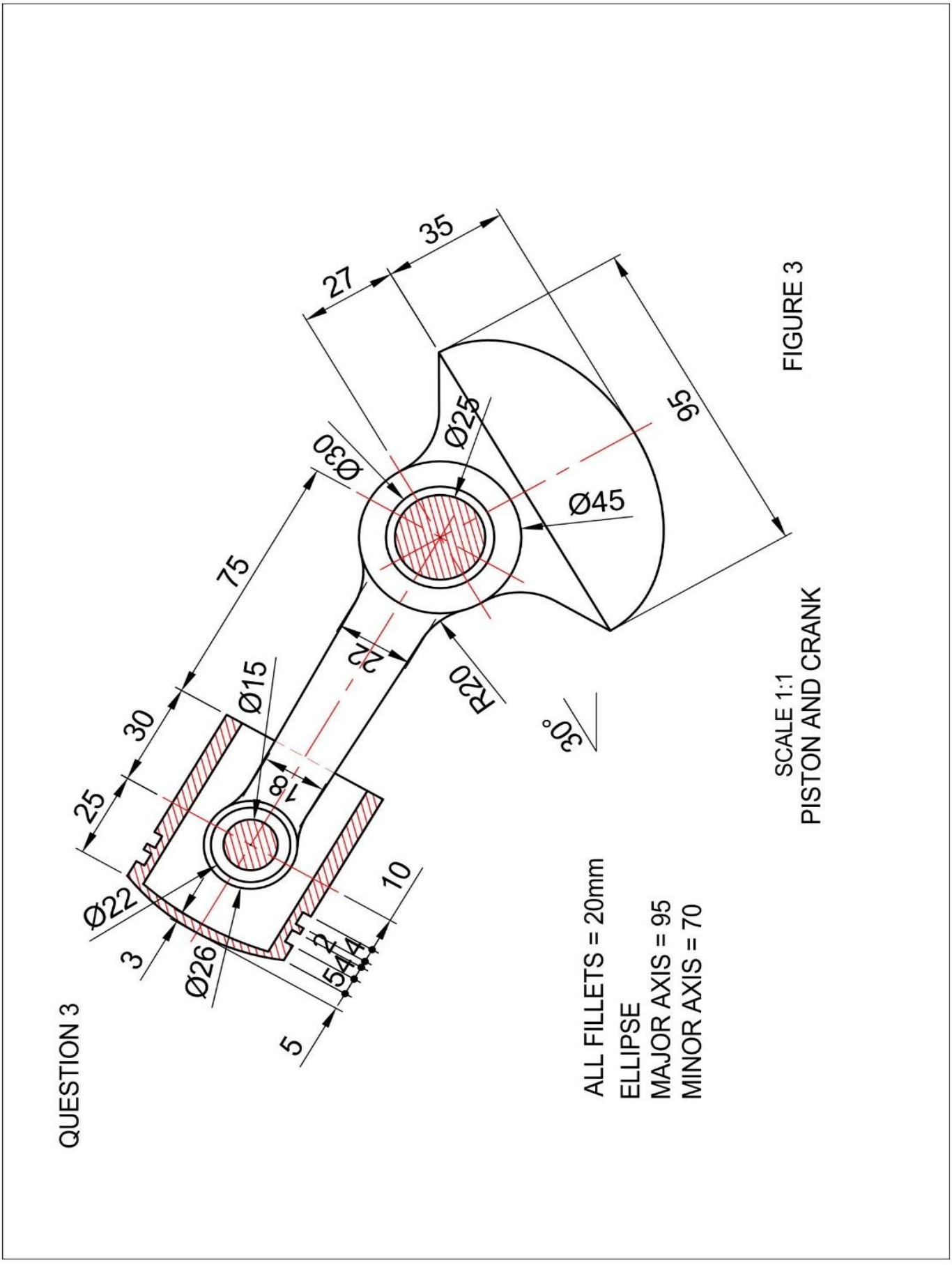
QUESTION 3
35
27
95
Ø25
Ø30
Ø45
75
22
R20
30°
Ø15
30
25
18
Ø22
3
Ø26
10
2
5
4
4
5
ALL FILLETS = 20mm
ELLIPSE
MAJOR AXIS = 95
MINOR AXIS = 70
SCALE 1:1
PISTON AND CRANK
FIGURE 3

QUESTION 4

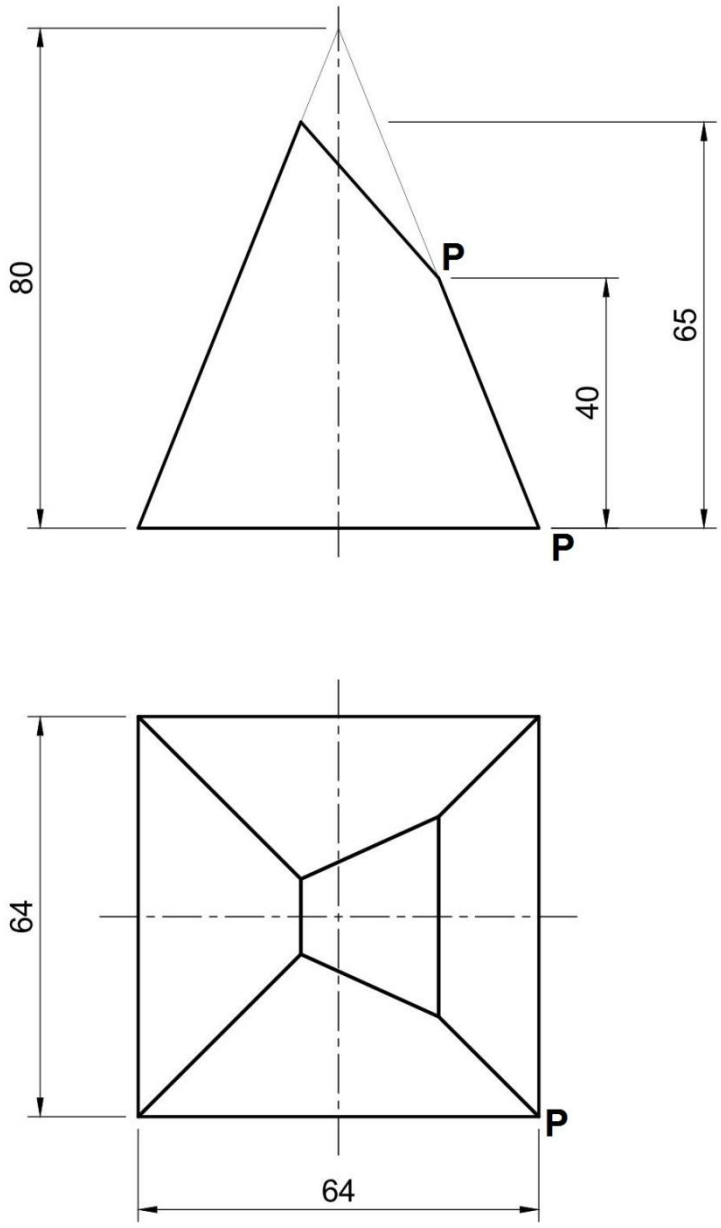

FIGURE 4

Copyright reserved

QUESTION 5

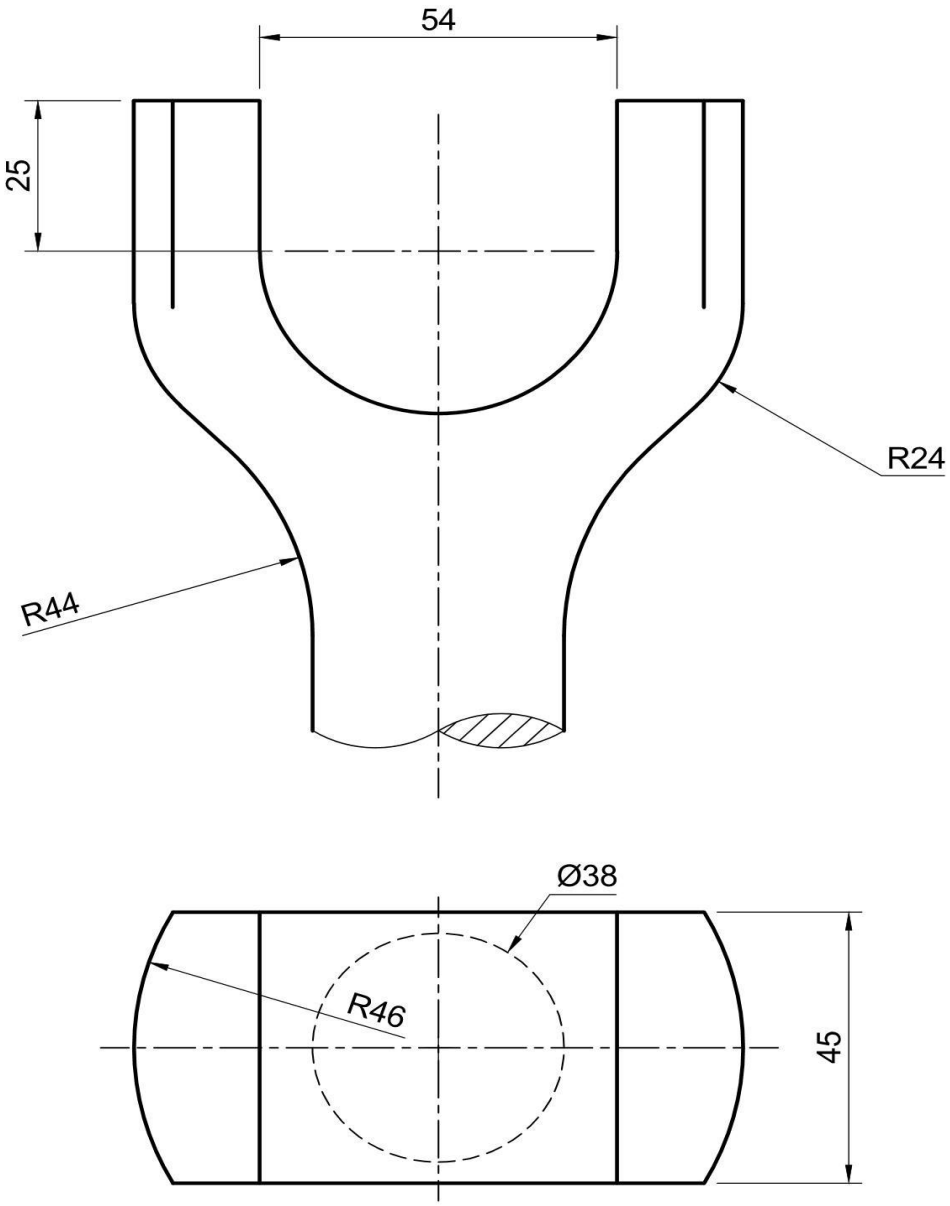

FIGURE 5

Copyright reserved