higher education & training

Department:
Higher Education and Training
REPUBLIC OF SOUTH AFRICA

T740**(E)**(A13)T

NATIONAL CERTIFICATE

GENERAL DRAUGHTING

(8090194)

13 August 2019 (X-Paper)
09:00–13:00

CLOSED-BOOK EXAMINATION

REQUIREMENTS: ONE A2 drawing sheet

Calculators may be used.

This question paper consists of 4 pages and 5 diagram sheets.

Copyright reserved

DEPARTMENT OF HIGHER EDUCATION AND TRAINING
REPUBLIC OF SOUTH AFRICA

NATIONAL CERTIFICATE
GENERAL DRAUGHTING
TIME: 4 HOURS
MARKS: 100

INSTRUCTIONS AND INFORMATION

1. Answer ALL the questions.
2. Read ALL the questions carefully.
3. Number the answers according to the numbering system used in this question paper.
4. ALL drawings must be large, clear, neat and in good proportion.
5. Keep questions and subsections of questions together.
6. ALL drawings must comply with the SABS 0111-1990.
7. Use your discretion where NO dimensions are given.
8. Work neatly.

Copyright reserved

QUESTION 1: THE LOCI

FIGURE 1, DIAGRAM SHEET 1 (attached), shows a circular disc with centre O. The disc rolls without slipping along the contour from A to B in the direction shown.

Draw the locus of P. Name the loci generated by these conditions. Show ALL calculations. **[15]**

QUESTION 2: ORTHOGRAPHIC PROJECTION

FIGURE 2, DIAGRAM SHEET 2 (attached), shows the front and auxiliary views of a right regular hexagonal pyramid with a cylindrical hole.

Draw the following views in third-angle orthographic projection:

2.1 Front view and auxiliary view (9)

2.2 Top view (8)

2.3 Right view (8)

Show ALL hidden details. **[25]**

QUESTION 3: GEOMETRIC CONSTRUCTION

FIGURE 3, DIAGRAM SHEET 3 (attached), shows the front view of a bell crank.

Draw, to scale 1:1, the front view of the bell crank. Insert any 10 dimensions. Print the following title and scale centred beneath the view:

BELL CRANK
SCALE 1:1

Show ALL construction lines. **[25]**

QUESTION 4: INTERPENETRATION

FIGURE 4, DIAGRAM SHEET 4 (attached), shows the front and top views of a hexagonal prism interpenetrating another hexagonal prism.

4.1 Draw, to scale 1:1, the given views.

4.2 Complete the curve of interpenetration on the front view.

4.3 Complete the curve of interpenetration on the top view.

Show ALL projection lines. **[15]**

Copyright reserved

QUESTION 5: DEVELOPMENT

FIGURE 5, DIAGRAM SHEET 5 (attached), shows a pictorial view of two right regular solids.

5.1 Draw the development of the branch pipe.

5.2 Draw the development of the main pipe.

Show ALL construction lines. **[20]**

TOTAL: 100

Copyright reserved

DIAGRAM SHEET 1

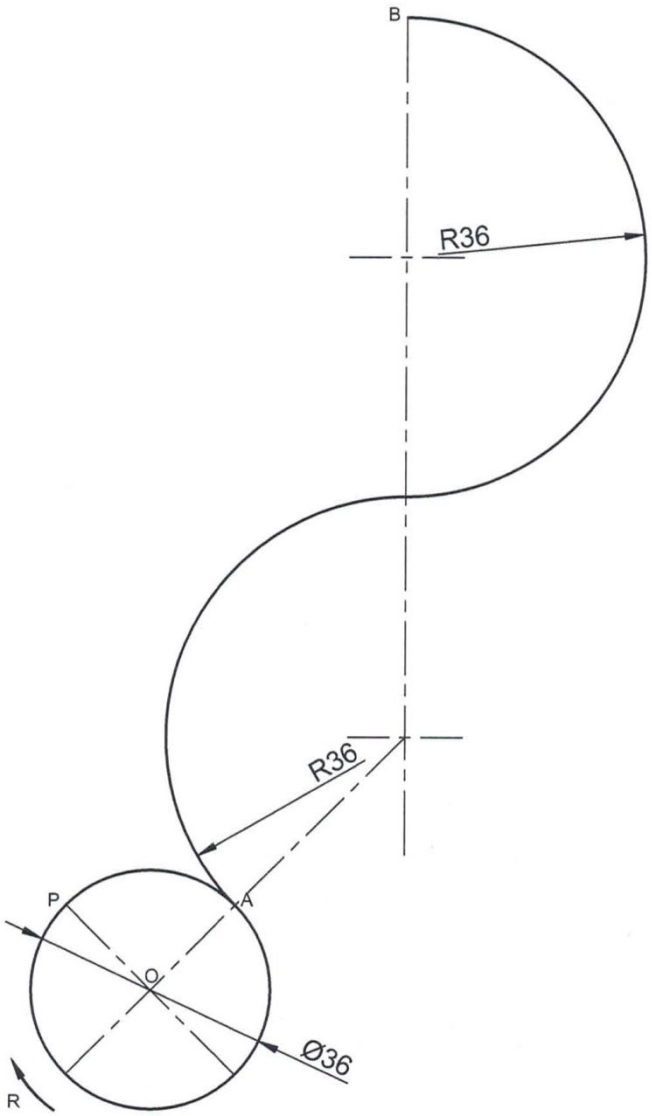

FIGURE 1

Copyright reserved

DIAGRAM SHEET 2

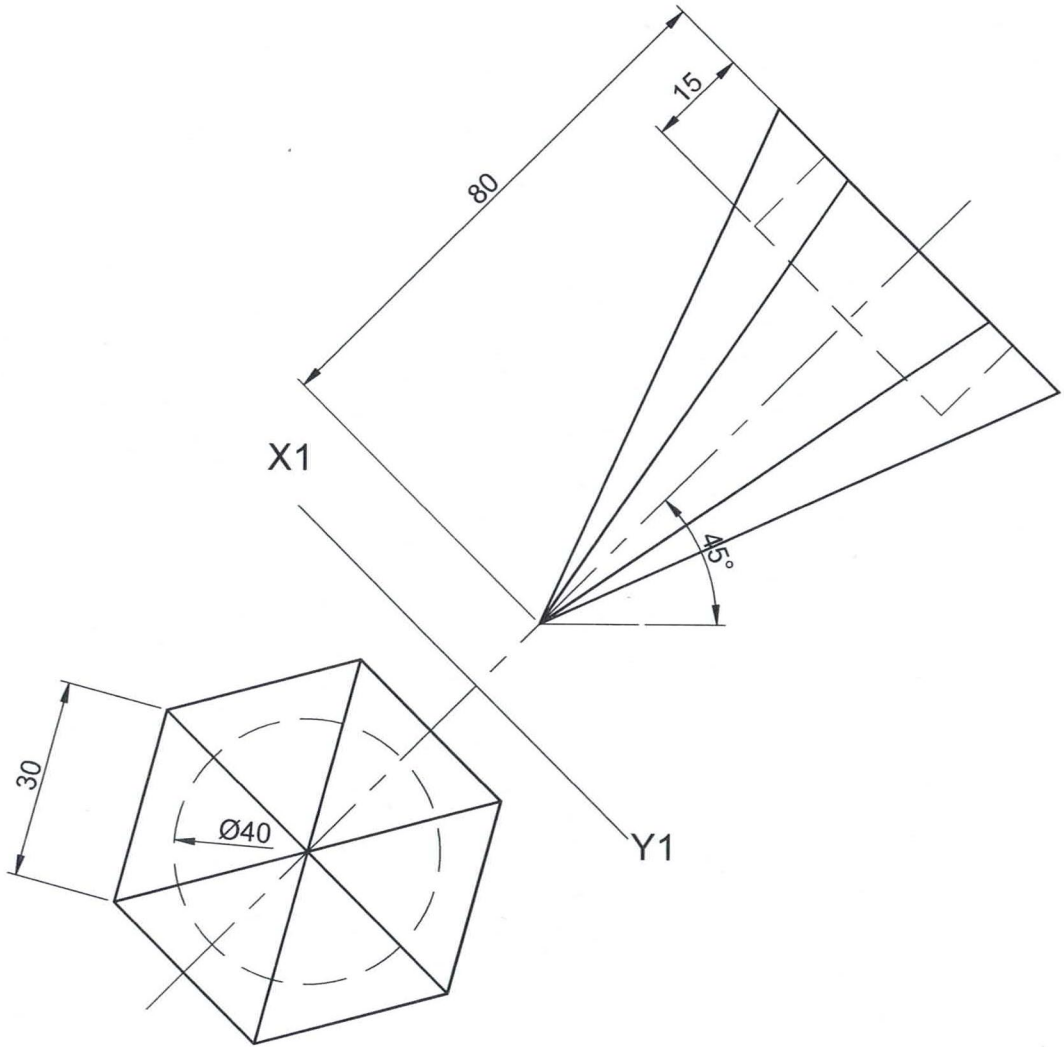

FIGURE 2

Copyright reserved

DIAGRAM SHEET 3

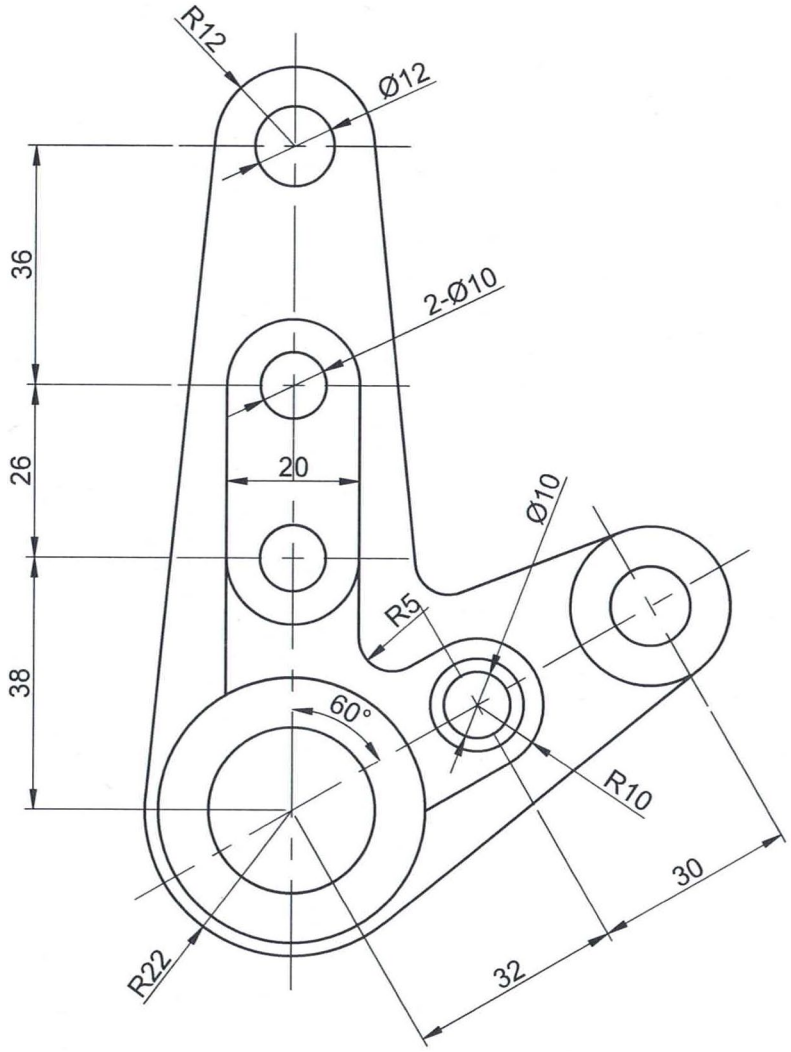

BELL CRANK

FIGURE 3

Copyright reserved

DIAGRAM SHEET 4

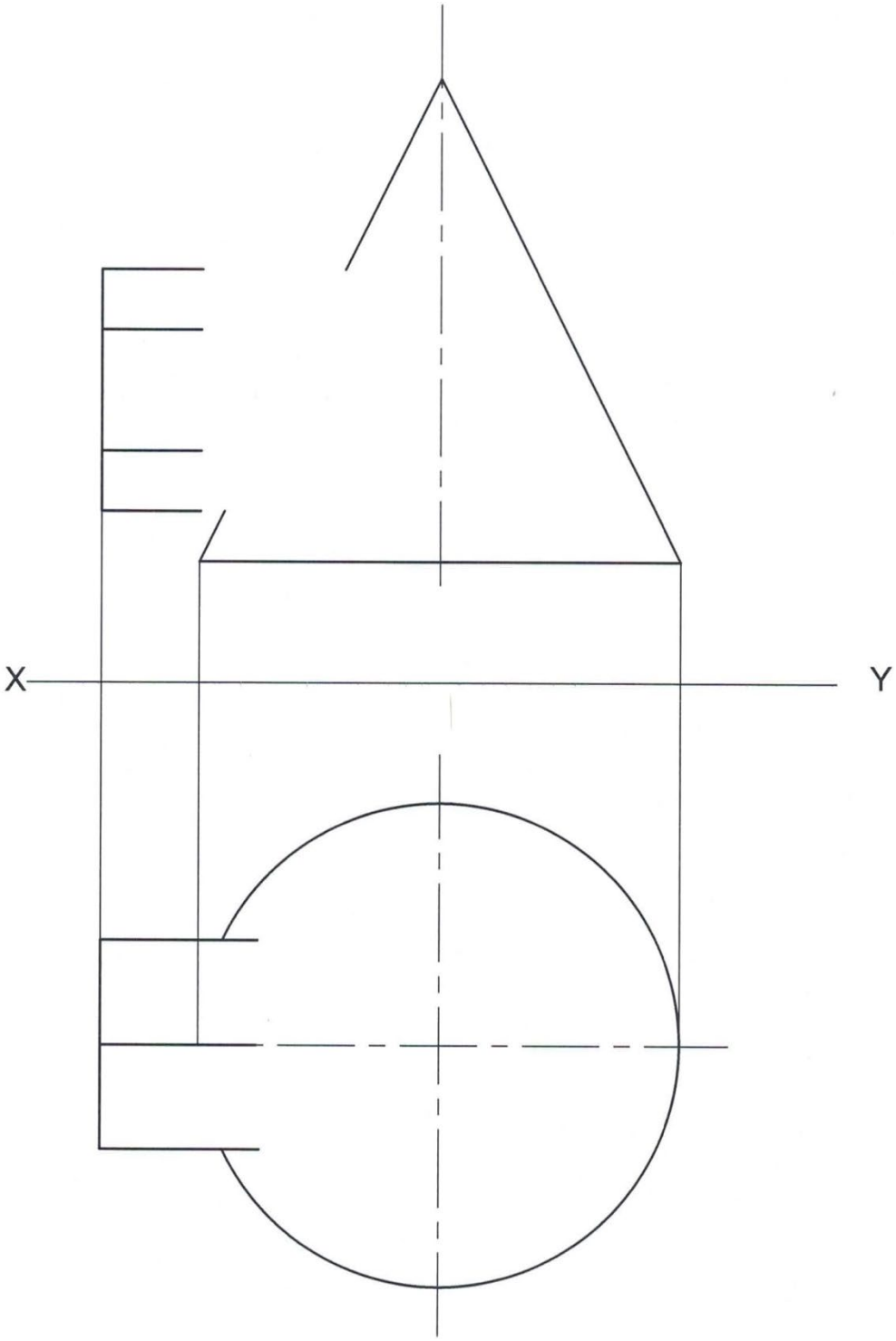

FIGURE 4

Copyright reserved

DIAGRAM SHEET 5

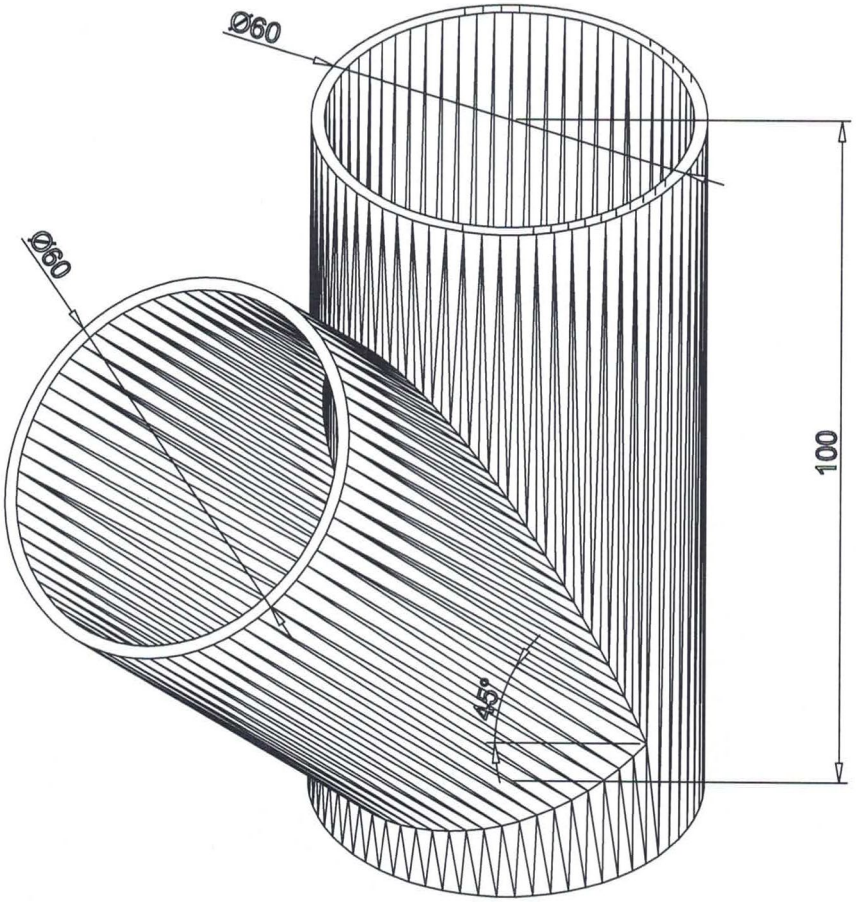

FIGURE 5

Copyright reserved