higher education & training

Department:
Higher Education and Training
REPUBLIC OF SOUTH AFRICA

MARKING GUIDELINE

NATIONAL CERTIFICATE

GENERAL DRAUGHTING

13 AUGUST 2019

This marking guideline consists of 6 pages.

Copyright reserved

QUESTION 1: THE LOCI

EPI-CYCLOID

$\beta = r/R \times 360°$

$= 18/36 \times 360$

$= 180°$

$\beta/12 = 15°$ per segment

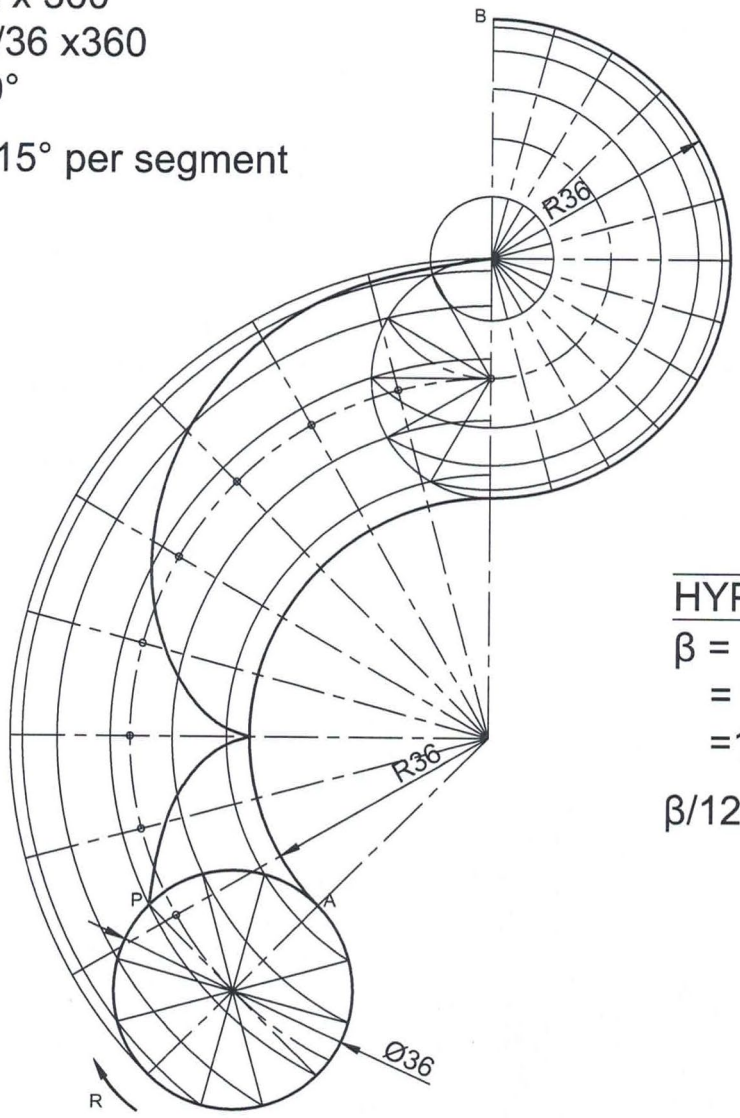

HYPO-CYCLOID

$\beta = r/R \times 360°$

$= 18/36 \times 360$

$= 180°$

$\beta/12 = 15°$ per segment

CORRECTNESS	5
ACCURACY	2
LINEWORK	1
CALCULATIONS	4
NAME OF LOCIS	2
LAYOUT	1
TOTAL	15

[15]

QUESTION 2: ORTHOGRAPHIC PROJECTION

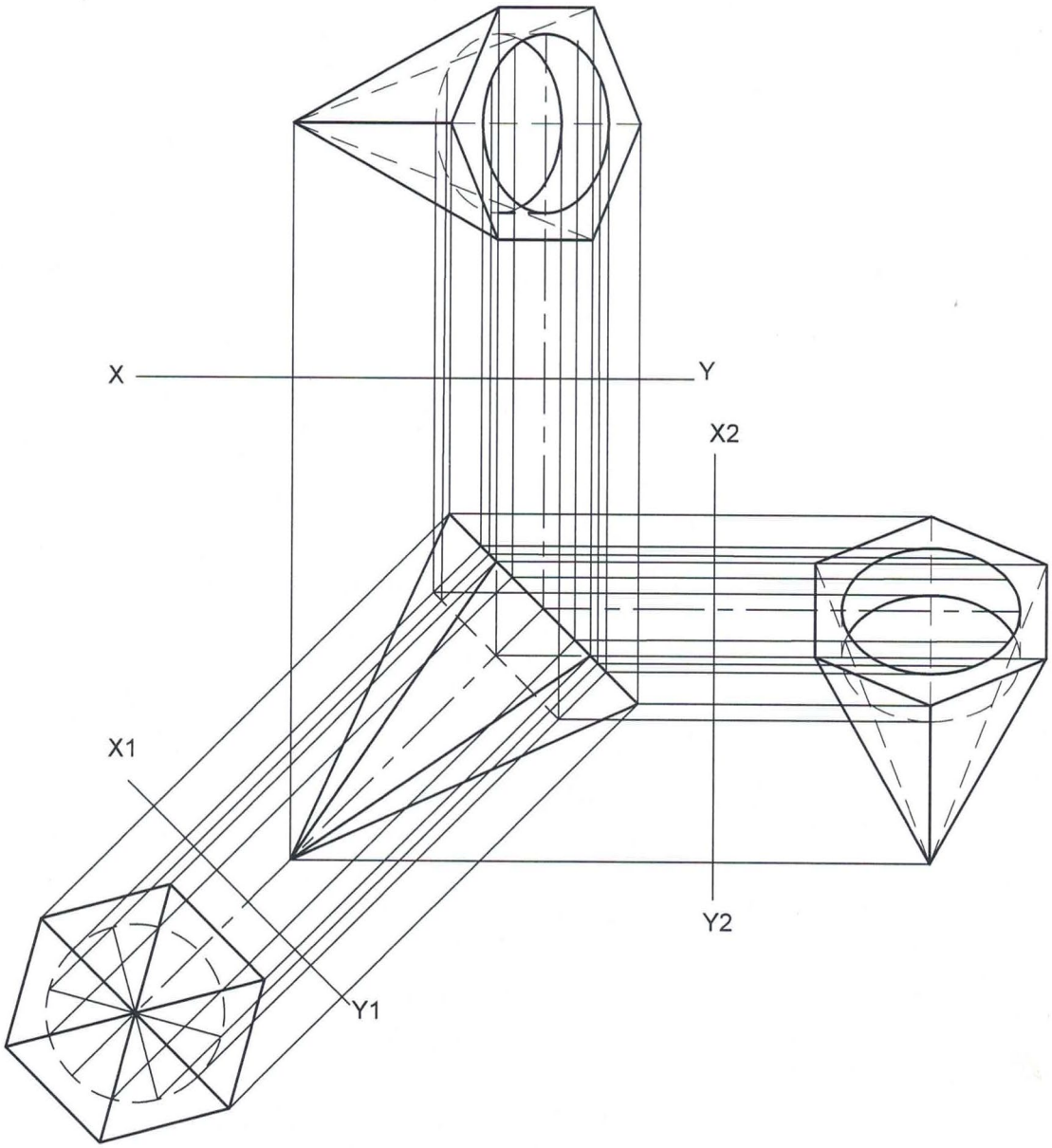

	FV	LV	TV
CORRECTNESS	4	4	4
ACCURACY	1.5	1	1
LINEWORK	2.5	2	2
LAYOUT	1	1	1
TOTAL	9	8	8

[25]

QUESTION 3: GEOMETRIC CONSTRUCTION

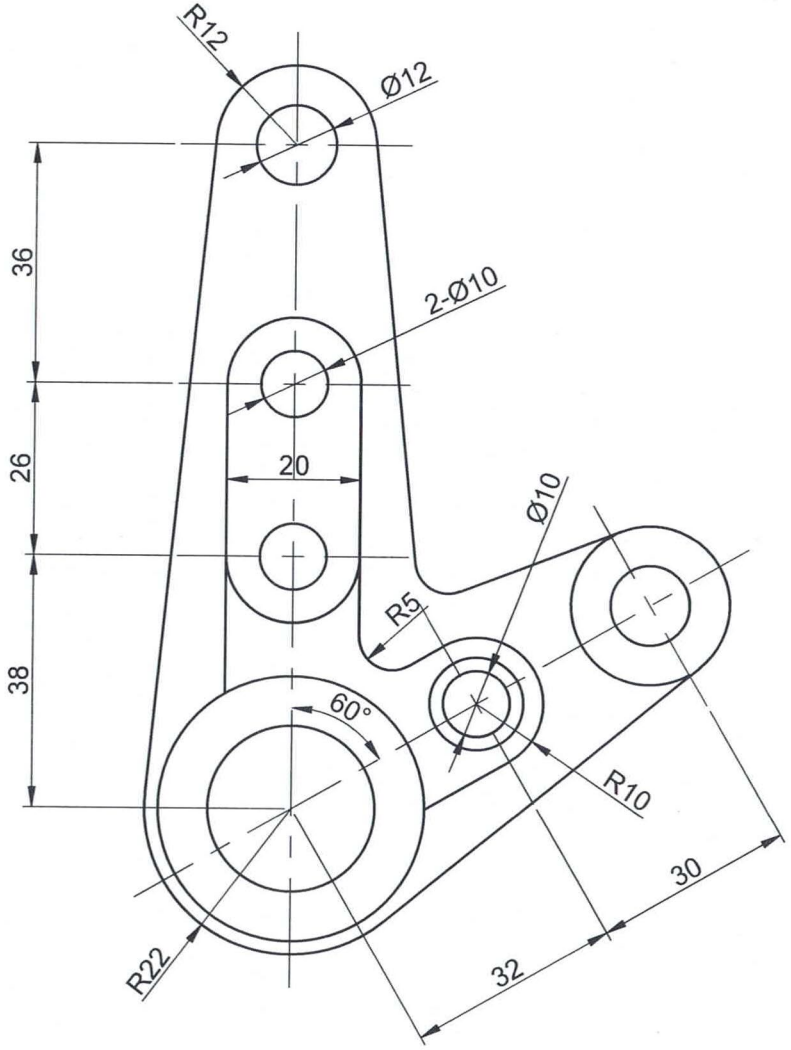

BELL CRANK
SCALE 1:1

CORRECTNESS	8
ACCURACY	4
LINEWORK	4
DIMENSIONS	5
TITLE & SCALE	2
LAYOUT	2
TOTAL	25

[25]

Copyright reserved

QUESTION 4: INTERPENETRATION

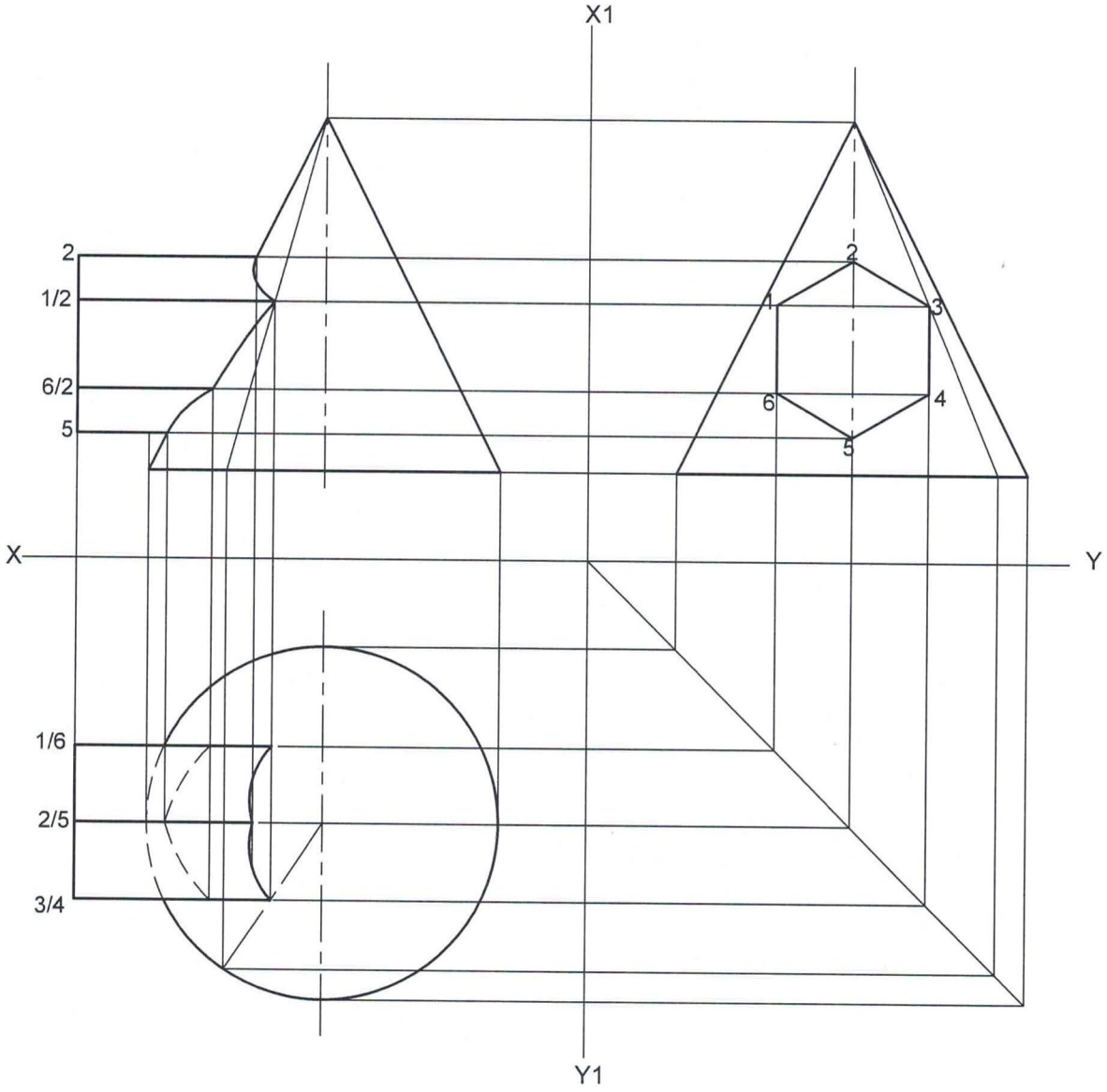

	FV	TV
CORRECTNESS	3.5	3.5
ACCURACY	1	1
LINEWORK	2	2
LAYOUT	1	1
TOTAL	7.5	7.5

[15]

QUESTION 5: DEVELOPMENT

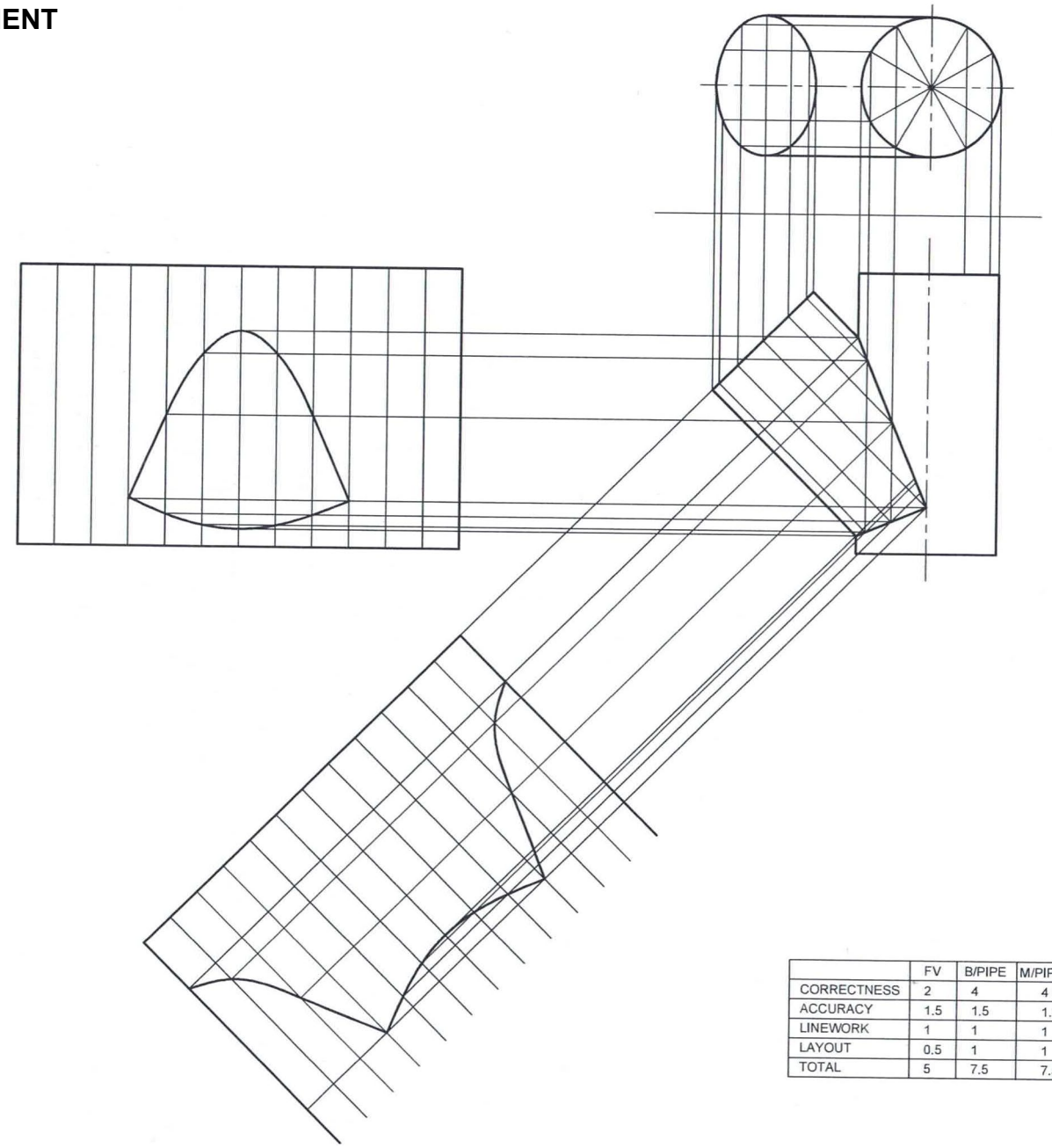

	FV	B/PIPE	M/PIPE
CORRECTNESS	2	4	4
ACCURACY	1.5	1.5	1.5
LINEWORK	1	1	1
LAYOUT	0.5	1	1
TOTAL	5	7.5	7.5

[20]

TOTAL : 100

Copyright reserved