higher education & training

Department:
Higher Education and Training
REPUBLIC OF SOUTH AFRICA

MARKING GUIDELINE

NATIONAL CERTIFICATE: MULTI-DISCIPLINARY DRAWING OFFICE PRACTICE

GENERAL DRAUGHTING

7 AUGUST 2018

This marking guideline consists of 8 pages.

Copyright reserved

QUESTION 1: GEOMETRIC CONSTRUCTION

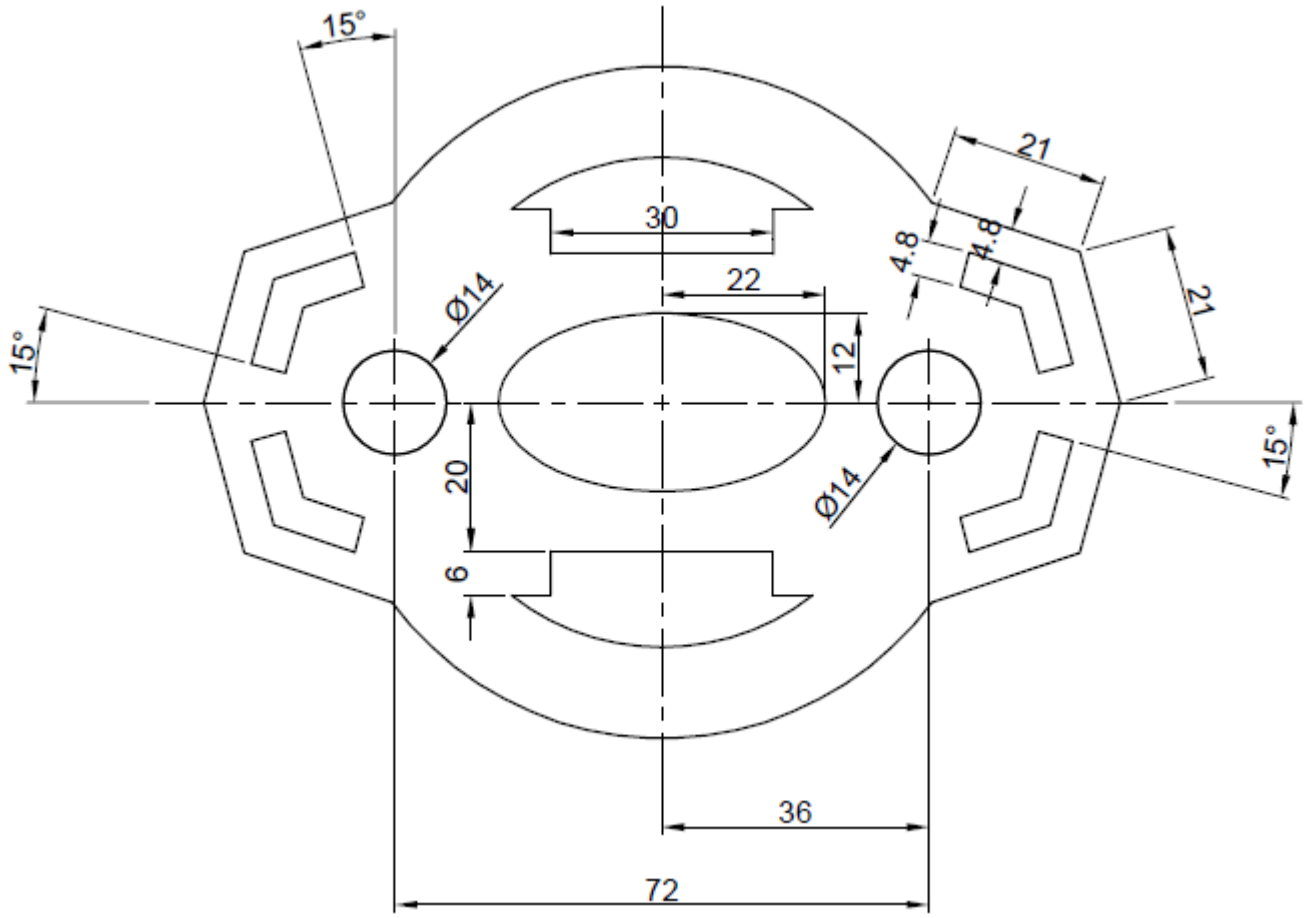

PLATE
SCALE 1 : 1

QUESTION 1	Marks	Total achieved
Correctness	10	
Accuracy	4	
Line work	2	
Neatness	2	
Scale	2	
TOTAL:	**20**	

[20]

QUESTION 2: DEVELOPMENT

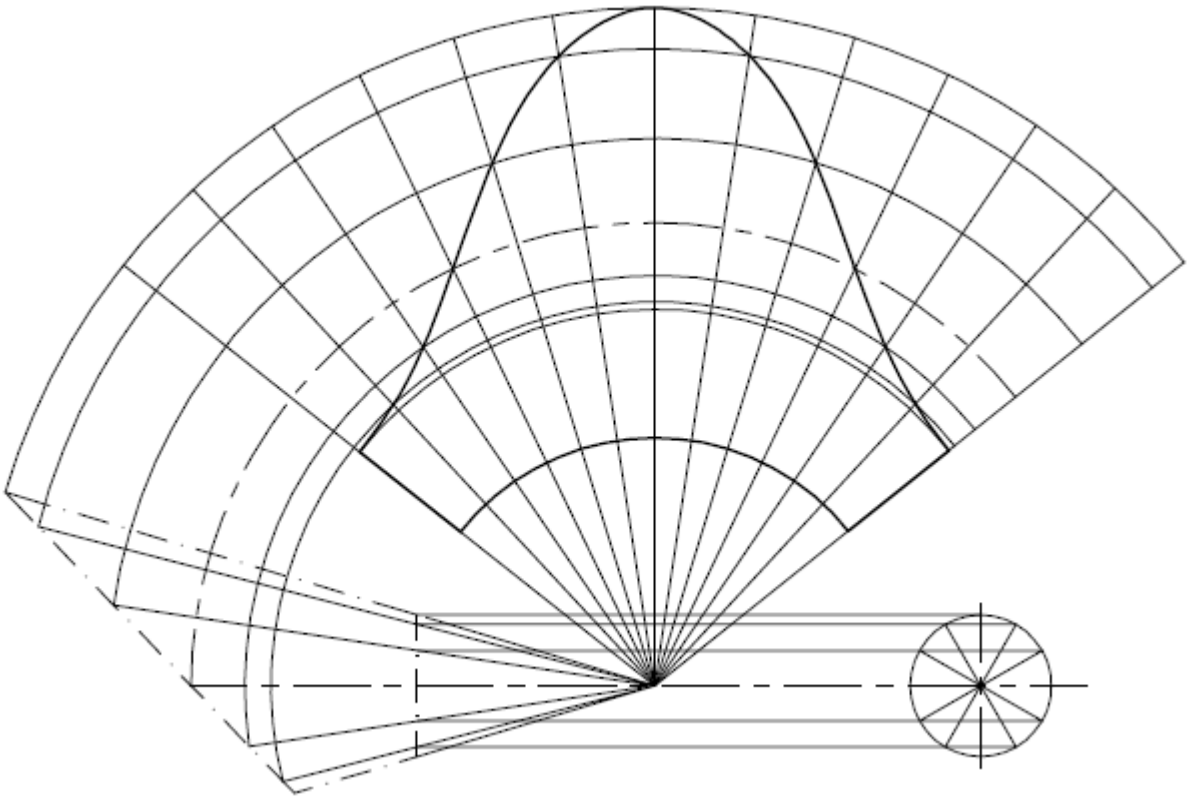

SCALE 1 : 5

QUESTION 2	Marks		Total achieved
	GV	DEV	
Correctness	2	10	
Accuracy	1	2	
Line work	1	2	
Neatness	1	1	
SUBTOTAL:	5	15	
TOTAL:	**20**		

[20]

QUESTION 3: INTERPENETRATION

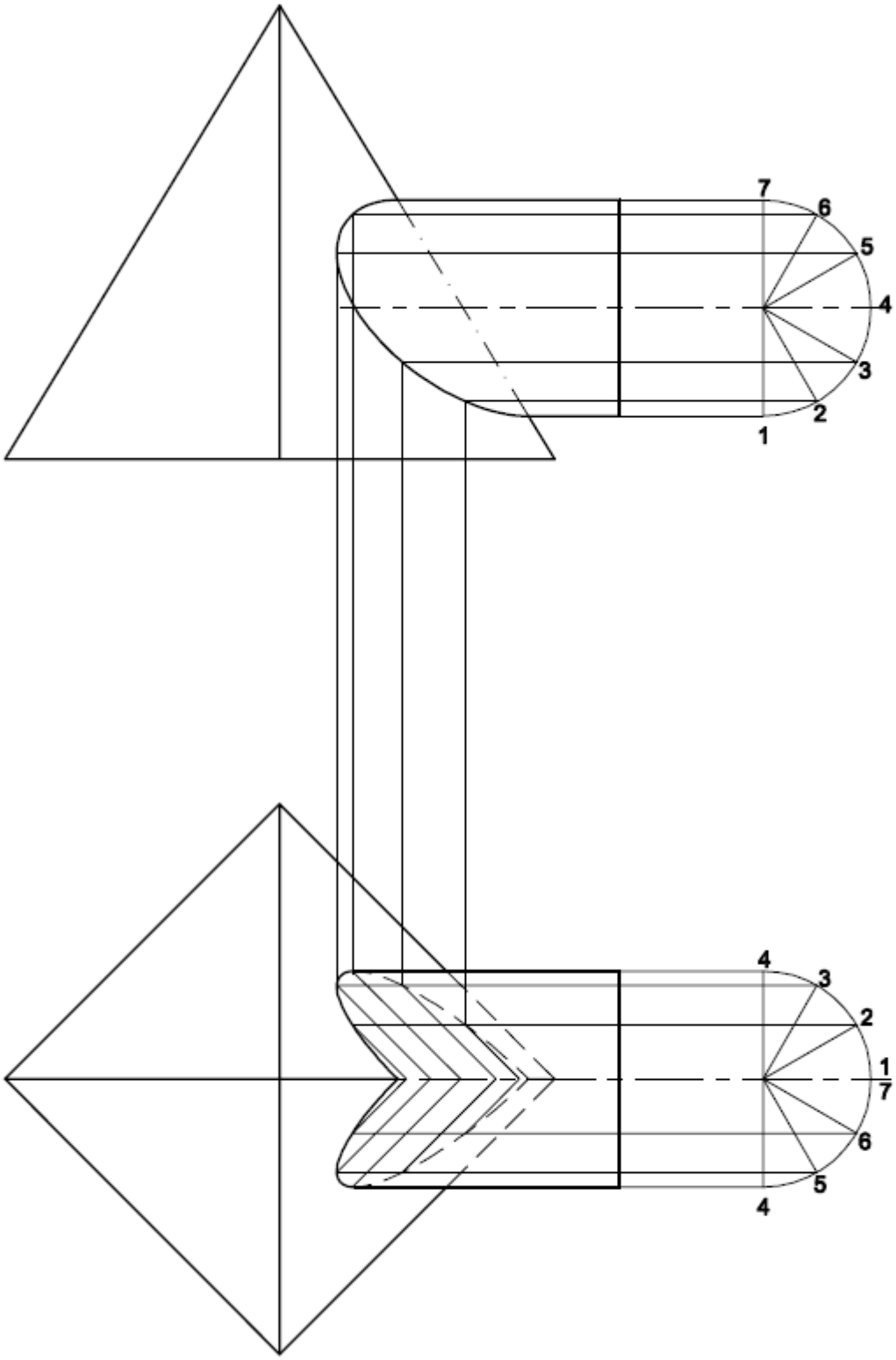

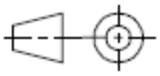

SCALE 1 : 1

QUESTION 3	**Marks**		**Total achieved**
	FV	**TV**	
Correctness	3	3	
Accuracy	2	2	
Line work	2	2	
Neatness	0,5	0,5	
SUBTOTAL:	7,5	7,5	
TOTAL:	**15**		

[15]

QUESTION 4: ORTHOGRAPHIC PROJECTION

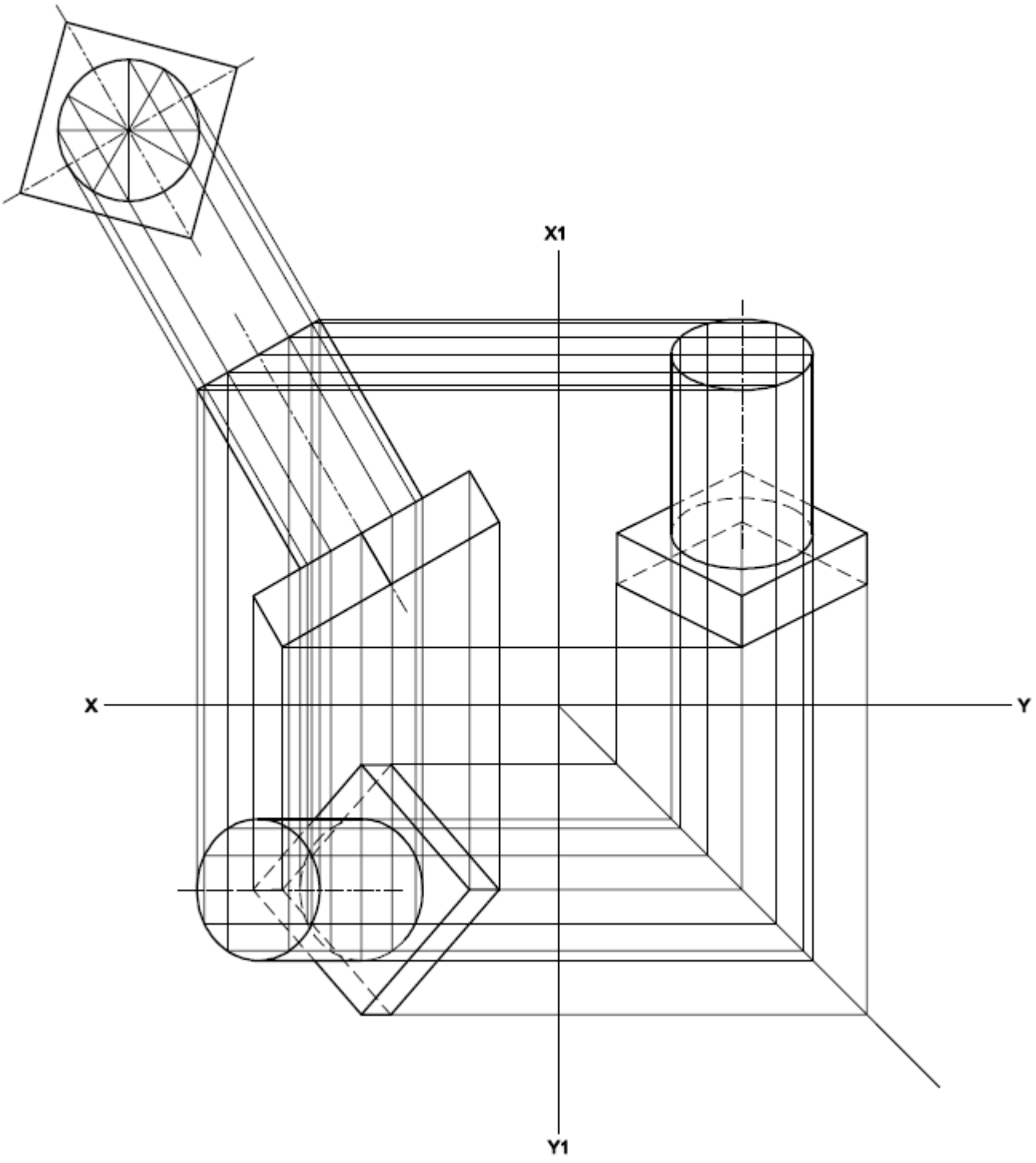

QUESTION 4	**Marks**			**Total achieved**
	GV	**TV**	**LV**	
Correctness	2	5	5	
Accuracy	1	2,5	2,5	
Line work	0,5	2	2	
Neatness	0,5	0,5	0,5	
SUBTOTAL:	4	10	10	
TOTAL:	**24**			

[24]

QUESTION 5: THE LOCI

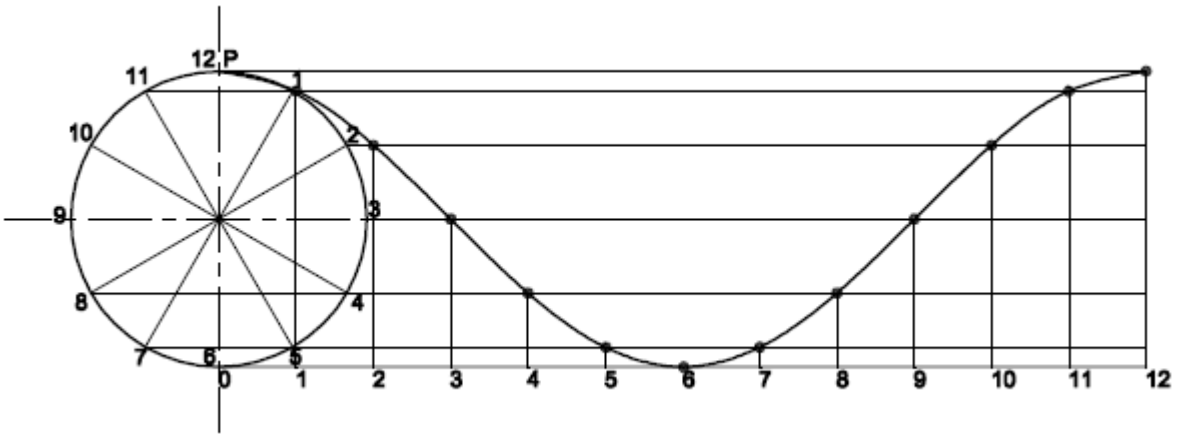

QUESTION 5	Marks	Total achieved
Correctness	7	
Accuracy	3	
Line work	3	
Neatness	2	
TOTAL:	**15**	

[15]

QUESTION 6: THEORY

TYPE OF DRAWING PAPER	
6.1	CARTRIDGE PAPER
6.2	DETAIL PAPER
6.3	GRID PAPER
6.4	TRACING PAPER

(Any relevant 3 × 2) **[6]**

TOTAL: 100

Copyright reserved