higher education & training

Department:
Higher Education and Training
REPUBLIC OF SOUTH AFRICA

T580**(E)**(N17)T

NOVEMBER EXAMINATION

NATIONAL CERTIFICATE

FITTING AND MACHINING THEORY N2

(11022032)

17 November 2016 (X-Paper)
09:00–12:00

Calculators may be used.

Candidates will require drawing instruments.

This question paper consists of 9 pages and 1 formula sheet.

Copyright reserved

DEPARTMENT OF HIGHER EDUCATION AND TRAINING
REPUBLIC OF SOUTH AFRICA

NATIONAL CERTIFICATE
FITTING AND MACHINING THEORY N2
TIME: 3 HOURS
MARKS: 100

NOTE: If you answer more than the required number of questions, only the required number of questions will be marked. All work you do not want to be marked must be clearly crossed out.

INSTRUCTIONS AND INFORMATION

1. Answer ALL the questions in SECTION A.
2. Answer ONLY TWO questions in SECTION B.
3. Answer either QUESTION 1.1 OR 1.2 of QUESTION 1.
4. Read ALL the questions carefully.
5. Number the answers according to the numbering system used in this question paper.
6. Write neatly and legibly.

Copyright reserved

SECTION A

QUESTION 1: OCCUPATIONAL SAFETY

NOTE: Answer ONLY QUESTION 1.1 OR QUESTION 1.2

1.1 The Occupational Health and Safety Act of 1993 and its applicable regulations apply.

Indicate whether the following statements are TRUE or FALSE. Choose the answer and write only 'true' or 'false' next to the question number (1.1.1–1.1.5) in the ANSWER BOOK.

1.1.1 A ladder should be placed against a wall with its feet a quarter of its length away from the wall.

1.1.2 Gas cylinders can be lifted by means of electromagnets.

1.1.3 When changing air tools, the quick method of bending the hose should be used to cut off the air supply.

1.1.4 It is always a good practice to ensure that cool air is supplied at the intake of a compressor.

1.1.5 Where more than one worker is used to move heavy equipment, teamwork is extremely important to prevent accidents.

(5 × 1) (5)

OR

1.2 The regulations applicable to the Minerals Act of 1991 apply.

Indicate whether the following statements are TRUE or FALSE. Choose the answer and write only 'true' or 'false' next to the question number (1.2.1–1.2.5) in the ANSWER BOOK.

1.2.1 Illumination of machinery in a mine is not necessary if people are moving around the machine but not working on it.

1.2.2 Any experienced worker can oil a machine in motion at any time.

1.2.3 First-aid certificates shall be renewed at intervals of not more than three years.

1.2.4 When an accident causes the death of a person, such a place must first be inspected by a mining engineer.

1.2.5 If the inspection of an area where a fatal accident occurred does not take place within three days, the work may continue.

(5 × 1) (5)
[5]

Copyright reserved

QUESTION 2: COUPLINGS

Couplings are classified into three main groups.

2.1 Name the THREE main groups into which couplings are classified. (3)

2.2 Give ONE example of a coupling that falls into each group listed in 2.1. (3)
[6]

QUESTION 3: LIMITS AND FITS

3.1 Give an example of a bilateral tolerance, indicating its basic size and upper and lower limits. (1)

3.2 Give an example of a unilateral tolerance, indicating its basic size and upper and lower limits. (1)

3.3 List the THREE main classes of fit associated with the ISO schedule of limits and fits. (3)

3.4 State the class of fit associated with the following types of fit:

3.4.1 Sliding fit

3.4.2 Shrink fit

(2 × 1) (2)
[7]

QUESTION 4: BEARINGS

4.1 Give FOUR reasons for the overheating of anti-friction bearings. (4)

4.2 Briefly describe the heating-lamp method of mounting anti-friction bearings. (3)
[7]

QUESTION 5: LUBRICATION AND VALVES

5.1 State TWO factors that should be considered when choosing a lubricant for a specific operation. (2)

5.2 Define the term *burning point*. (1)

5.3 Name the valves shown in FIGURE 1. Write only the name of the valve next to the question number (5.3.1–5.3.4) in the ANSWER BOOK.

Copyright reserved

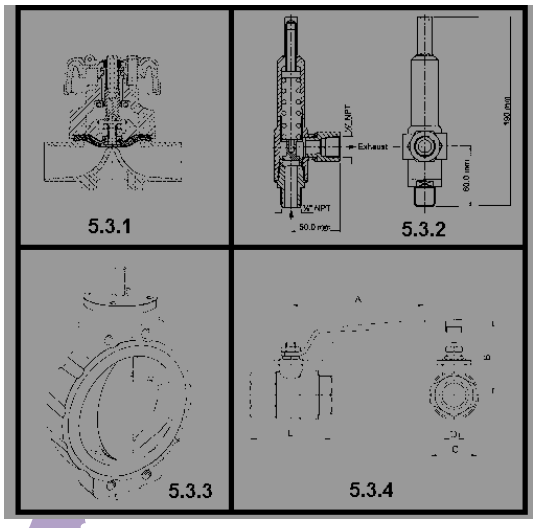

FIGURE 1

(4 × 1) (4)
[7]

QUESTION 6: PACKING, STUFFING BOXES AND JOINTS AND WATER-PIPE SYSTEMS

6.1 The statements below refer to packing, stuffing boxes and joints.

Indicate whether the following statements are TRUE or FALSE. Choose the answer and write only 'true' or 'false' next to the question number (6.1.1–6.1.3) in the ANSWER BOOK.

6.1.1 Packing is used to wrap up seals so that they are ready for use.

6.1.2 A protective cover should be placed over threaded sections to prevent damage to seals.

6.1.3 Asbestos is no longer recommended as a packing material because of its association with health problems.

(3 × 1) (3)

6.2 Name the THREE methods of accommodating expansion and contraction in pipe lines as shown in FIGURE 2. Write only the name of the joint next to the letters (A-C) in the ANSWER BOOK.

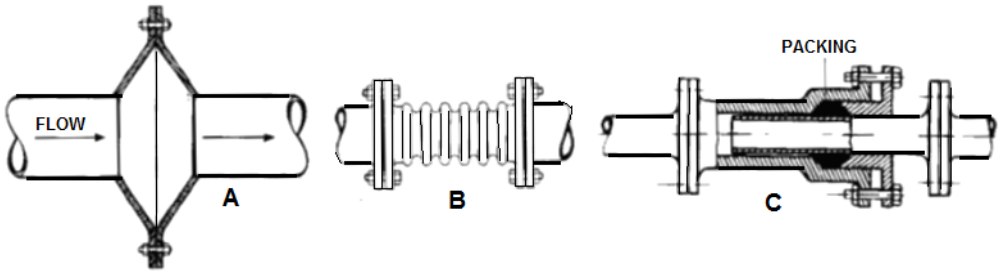

FIGURE 2

(3 × 1) (3)

6.3 Welding and flanging are TWO methods of joining steel pipes.

Name THREE other methods of joining steel pipes. (3)
[9]

QUESTION 7: PUMPS

7.1 Name the THREE categories into which pumps are classified. (3)

7.2 Briefly explain the operation of a gear pump. (3)
[6]

QUESTION 8: COMPRESSORS

8.1 State TWO functions of the aftercooler used in compressors. (2)

8.2 Name THREE types of rotary compressors. (3)
[5]

QUESTION 9: V-BELT, CHAIN AND GEAR DRIVES AND REDUCTION GEARBOXES

9.1 Explain the following V-belt terms:

9.1.1 Centre distance

9.1.2 Arc of contact

(2 × 1) (2)

9.2 Give TWO reasons why an intermediate gear is used in a gear drive. (2)

9.3 Name FOUR basic components of a single reduction gearbox. (4)
[8]

TOTAL SECTION A: 60

SECTION B

Answer only TWO of the questions in SECTION B.

QUESTION 10: HYDRAULICS AND PNEUMATICS

10.1 Explain the function of a check valve in a hydraulic system. (1)

10.2 Make neat free-hand sketches of the ISO symbols representing the following pneumatic components:

10.2.1 Throttle valve

10.2.2 Check valve

10.2.3 Receiver/tank

10.2.4 Dryer

10.2.5 Filter

(5 × 1) (5)

10.3 Name SIX types of valves that you would find in hydraulic systems. (6)

10.4 State FIVE basic aspects of inspection in the routine maintenance of a pneumatic circuit. (5)

10.5 List THREE main functions of a directional control valve in a hydraulic circuit. (3)
[20]

QUESTION 11: CENTRE LATHES

11.1 Explain the function of a mandrel. (1)

11.2 State THREE advantages of using a mandrel on a lathe. (3)

11.3 Name the THREE basic instructional forms used on a CNC lathe. (3)

11.4 Explain the difference between absolute programming and incremental programming used on CNC lathe. (2)

11.5 A two-start square thread with a 5 mm pitch is to be cut on a lathe. The pitch diameter of the thread is 100 mm and the clearance angle is 3º.

Calculate:

11.5.1 The helix angle of the thread (3)

11.5.2 The lead angle of the cutting tool used. (1)

11.5.3 The following angle of the cutting tool used (1)

Copyright reserved

11.6 11.6.1 Briefly explain how the travelling steady operates on a centre lathe.

11.6.2 Briefly explain how the fixed steady operates on a centre lathe.

(2 × 2) (4)

11.7 One method of cutting a taper on a centre lathe is the compound slide method.

11.7.1 State ONE advantage of using the compound slide method.

11.7.2 State ONE disadvantage of using the compound slide method.

(2 × 1) (2)
[20]

QUESTION 12: MILLING MACHINES AND SURFACE GRINDERS

12.1 There are FOUR methods of indexing using dividing head on milling machines.

12.1.1 Name the FOUR methods of indexing (4)

12.1.2 State the circumstance under which each of the indexing methods listed in 12.1.1 will be used. (4)

12.2 Explain the purpose of the dividing head. (2)

12.3 A work piece must have 13 gear teeth machined on its circumference.

12.3.1 What type of indexing would you perform on this gearblank? (1)

12.3.2 Give a reason for the answer in QUESTION 12.3.1. (1)

12.3.3 Calculate the required indexing, using a Cincinnati dividing head table, as shown below. (3)

The Cincinnati Dividing Head											
Side 1	**24**	**25**	**28**	**30**	**34**	**37**	**38**	**39**	**41**	**42**	**43**
Side 2	**46**	**47**	**49**	**51**	**53**	**54**	**57**	**58**	**59**	**62**	**66**

12.4 Grinding wheels have markings for identification purposes.

List the FIVE factors by which you would identify a grinding wheel. (5)
[20]

TOTAL SECTION B: 40
GRAND TOTAL: 100

Copyright reserved

FITTING AND MACHINING THEORY N2

FORMULA SHEET

$f = f_t \times T \times N$

$S = \frac{\pi D N}{60}$

$S = \pi D n$

$\frac{40}{N}$

$\frac{N}{9°}$

$\text{Set-over} = \frac{D - d}{2} \times \frac{\text{length of workpiece}}{\text{length of taper}}$

$\text{Set-over} = \frac{\text{length of workpiece}}{2} \times \text{Ratio}$

$\tan \frac{\theta}{2} = \frac{X}{L}$

Leading angle = 90° - (Helix angle + clearance angle)

Following angle = 90° + (Helix angle - clearance angle)

Lead = No. of starts × pitch

$\text{Mean diameter} = OD - \frac{\text{Pitch}}{2}$

$\tan \theta = \frac{\text{Lead}}{\text{Mean circumference}}$

Copyright reserved