higher education & training

Department:
Higher Education and Training
REPUBLIC OF SOUTH AFRICA

# NATIONAL CERTIFICATE

# FITTING AND MACHINING THEORY N1

(11021871)

**22 November 2019 (X-Paper)**
**09:00–12:00**

**This question paper consists of 9 pages and 1 formula sheet.**

Copyright reserved

# DEPARTMENT OF HIGHER EDUCATION AND TRAINING
# REPUBLIC OF SOUTH AFRICA

NATIONAL CERTIFICATE
FITTING AND MACHINING THEORY N1
TIME: 3 HOURS
MARKS: 100

---

**NOTE:** If you answer more than the required number of questions, only the required number will be marked. Clearly cross out ALL work you do NOT want to be marked.

**INSTRUCTIONS AND INFORMATION**

1. Answer ALL the questions in SECTION A except at QUESTION 1 where either QUESTION 1.1 **OR** QUESTION 1.2 must be answered.
2. Answer ALL the questions in SECTION B.
3. Read ALL the questions carefully.
4. Number the answers according to the numbering system used in this question paper.
5. Write neatly and legibly.

---

Copyright reserved 

## SECTION A: GENERAL PRACTICE

## QUESTION 1: OCCUPATIONAL SAFETY

Answer either QUESTION 1.1 **OR** QUESTION 1.2.

1.1 Name FIVE pieces of personal protective equipment that can be worn to give protection in a workshop or plant. (5)

**OR**

1.2 1.2.1 The Minerals Act No. 50 of 1991 lists regulations under general provisions. Regulation 10.2.4 deals with the use of compressed air.

List THREE ways in which compressed air should NOT be used. (3)

1.2.2 State TWO conditions under which a diesel engine may NOT be used underground. (2)
**[5]**

## QUESTION 2: MEASURING INSTRUMENTS

2.1 FIGURE 1 shows a vernier calliper.

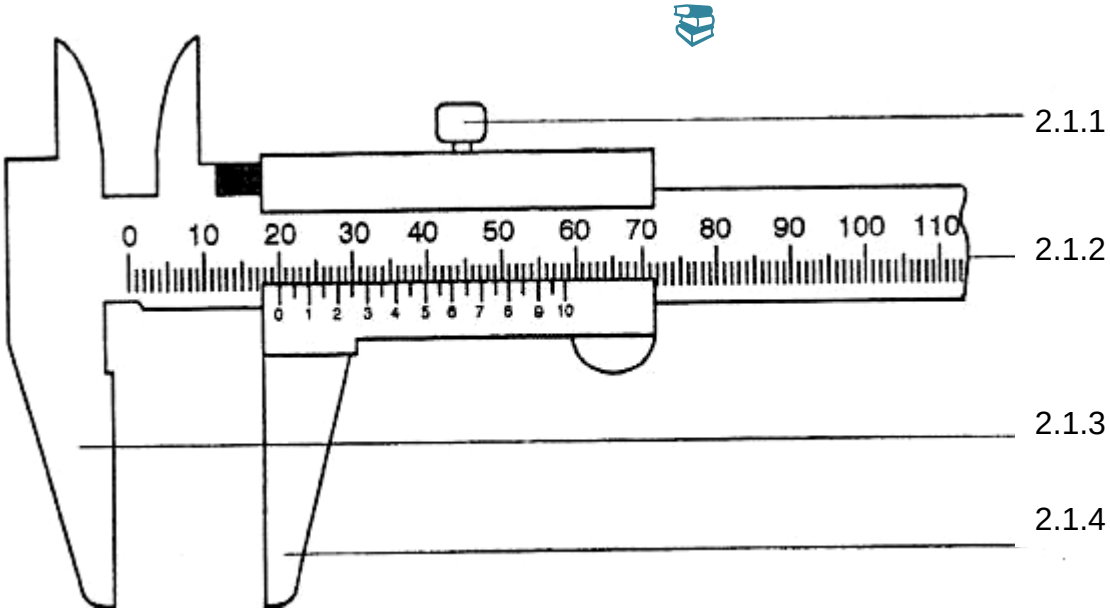


**FIGURE 1**

Label the parts of the vernier calliper by writing only the answer next to the question number (2.1.1–2.1.4) in the ANSWER BOOK. (4 × 1) (4)

2.2 Give THREE uses of a vernier calliper. (3)

2.3 What is the accuracy of normal vernier callipers? (2)

2.4 Give TWO uses of a dial test indicator. (2)
**[11]**

## QUESTION 3: SCREW THREADS

3.1 Define each of the following terms used to describe screw threads and give ONE use of each:

3.1.1 Single-start screw thread

3.1.2 Multistart screw thread

(2 × 2) (4)

3.2 When are right- and left-handed screw threads used simultaneously? (2)
**[6]**

## QUESTION 4: HAND TOOLS

4.1 List THREE types of pliers besides long-nose pliers. (3)

4.2 Give THREE uses of long-nose pliers. (3)
**[6]**

## QUESTION 5: METALS AND PLASTICS

5.1 Name the FOUR elements that make up white metal. (4)

5.2 Give FOUR uses of zinc. (4)

5.3 Tufnol is a plastic commonly used in the industry instead of using steel.

List FOUR properties of Tufnol. (4)
**[12]**

Copyright reserved 

## QUESTION 6: MARKING OFF

FIGURE 2 shows a surface gauge.

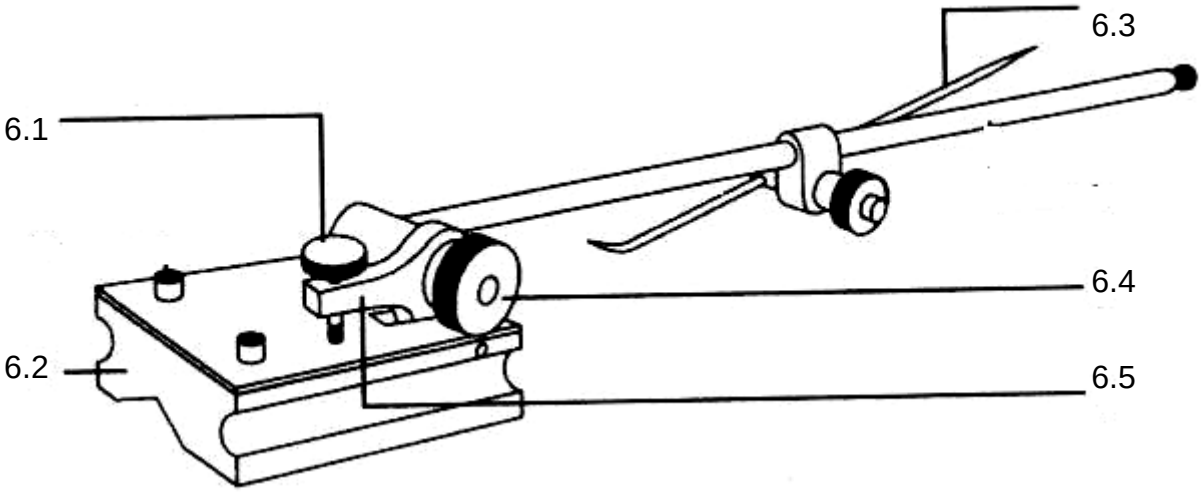


**FIGURE 2**

Label the parts of the surface gauge by writing only the answer next to the question number (6.1–6.5) in the ANSWER BOOK. (5 × 1) **[5]**

## QUESTION 7: KEYS AND KEYWAYS

7.1 Give TWO uses of a gib-head taper key. (2)

7.2 Calculate the thickness and width of a key that has to be fitted to a shaft with a diameter of 360 mm. (4)
**[6]**

## QUESTION 8: FASTENERS

8.1 Explain how a tab washer is used to prevent a nut from working loose. (3)

8.2 Give ONE function of a flat washer. (1)
**[4]**

## QUESTION 9: HAND TAPS, STOCKS, DIES AND REAMERS

9.1 Name THREE types of reamers. (3)

9.2 Why do most metal-cutting operations need cutting fluids? (2)
**[5]**

**TOTAL SECTION A: 60**

## SECTION B

## QUESTION 10: DRILLING MACHINES

10.1 Why should a workpiece not be held with one's hands when drilling? (2)

10.2 FIGURE 3 shows an angle-plate clamping.

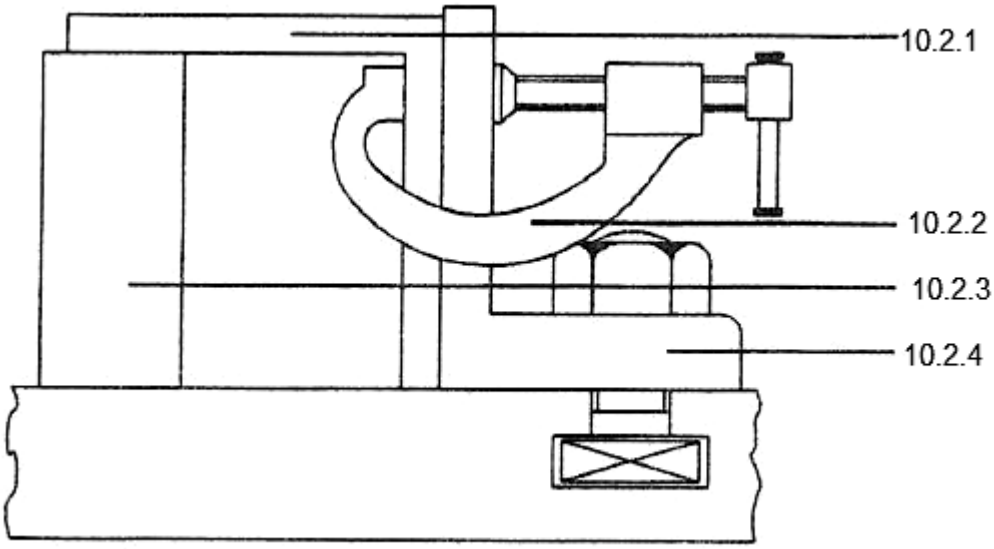


**FIGURE 3**

Label the parts of the angle-plate clamping by writing only the answer next to the question number (10.2.1–10.2.4) in the ANSWER BOOK. (4 × 1) (4)

10.3 Why is it important to take off ties and tuck in loose clothing when drilling? (1)

10.4 A drill 13 mm in diameter is used to drill a hole in an aluminium plate.

Calculate the cutting speed of this metal in millimetres per second if the drilling machine is spinning at 250 r/min. (3)

**[10]**

## QUESTION 11: GRINDING MACHINES AND MACHINE CUTTING TOOLS

11.1 Give TWO disadvantages of a Huntington wheel dresser. (2)

11.2 FIGURE 4 shows a diamond-tipped wheel dresser.

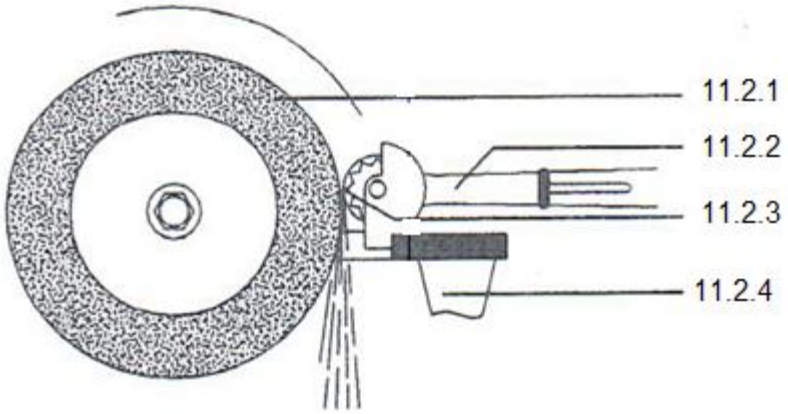


**FIGURE 4**

Label the components of the diamond-tipped wheel dresser by writing only the answer next to the question number (11.2.1–11.2.4) in the ANSWER BOOK. (4 × 1) (4)

11.3 What is the purpose of a work rest in a grinding machine? (2)

11.4 What must the size of the gap between the work rest and the wheel be? (1)

11.5 If a central nut secures the wheel to the flanges, why must the thread be in the opposite direction to the rotation of the spindle? (1)

**[10]**

## QUESTION 12: CENTRE LATHES

12.1 Give TWO disadvantages of setting over the tailstock for taper turning on a lathe. (2)

12.2 FIGURE 5 shows a bearing setup on a face plate for boring.

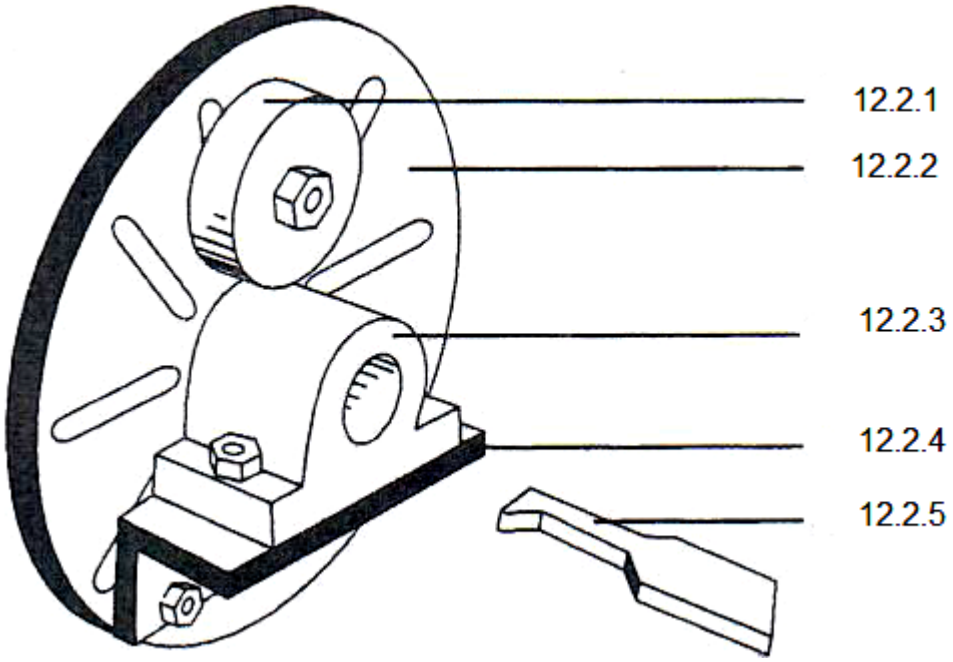


**FIGURE 5**

Label the components of the bearing setup by writing only the answer next to the question number (12.2.1–12.2.5) in the ANSWER BOOK. (5 × 1) (5)

12.3 Name THREE parts of the carriage on a lathe. (3)

**[10]**

## QUESTION 13: MILLING MACHINES

13.1 FIGURE 5 shows a milling machine.

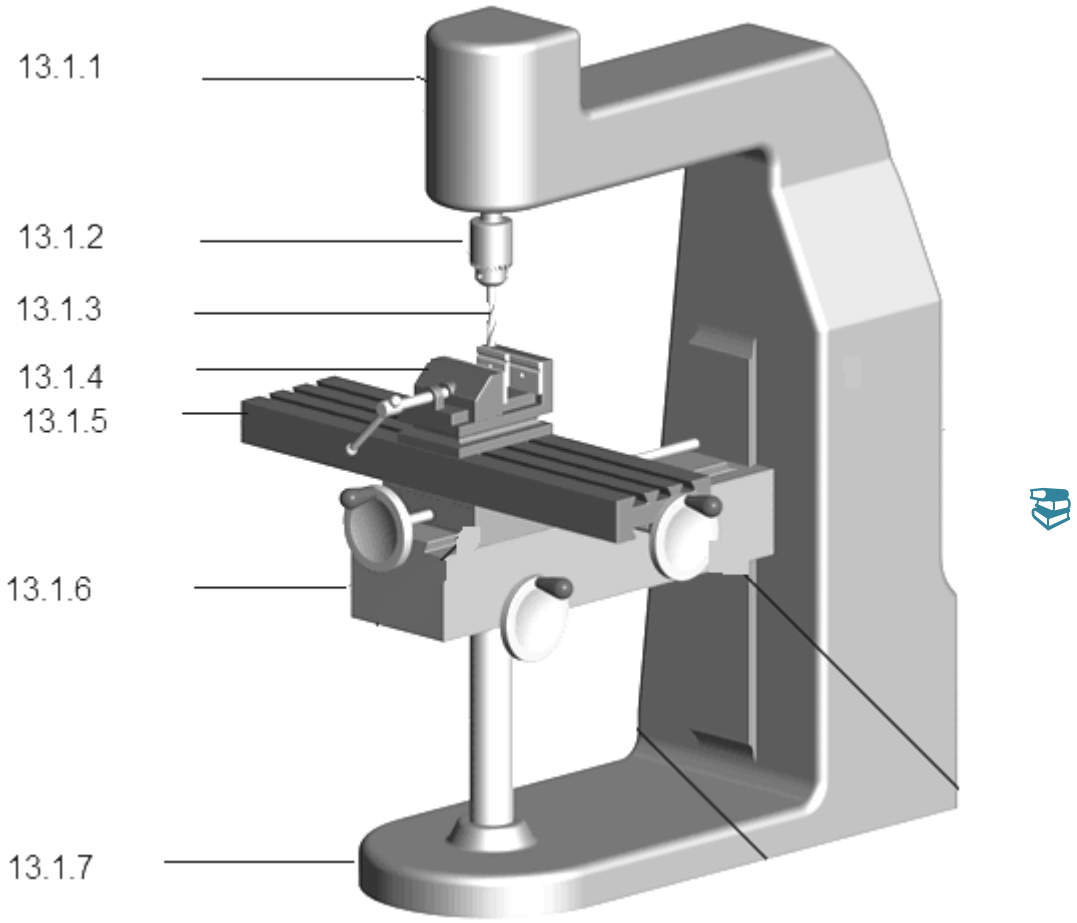


**FIGURE 5**

Label the components of the milling machine by writing only the answer next to the question number (13.1.1–13.1.7) in the ANSWER BOOK. (7 × 1) (7)

13.2 List THREE ways in which the universal milling machine differs from the plain milling machine. (3)

**[10]**

**TOTAL SECTION B: 40**
**GRAND TOTAL: 100**

Copyright reserved

## FORMULA SHEET

Any applicable formula may also be used.

1. $V = \pi \times D \times N$

2. w = feed/stroke × strokes/min × t

3. Strokes/min = $\frac{S}{Length\ of\ \ stroke}$ × ratio

4. $h = \frac{D}{6}$

5. $w = \frac{D}{4}$

6. Depth (D) = 0,613 × P

Copyright reserved