higher education & training

Department:
Higher Education and Training
REPUBLIC OF SOUTH AFRICA

T570**(E)**(N22)T

NOVEMBER EXAMINATION

NATIONAL CERTIFICATE

FITTING AND MACHINING THEORY N1

(11021871)

22 November 2016 (X-Paper)
09:00–12:00

Drawing instrument and calculators may be used.

This question paper consists of 9 pages and 1 formula sheet.

Copyright reserved

DEPARTMENT OF HIGHER EDUCATION AND TRAINING
REPUBLIC OF SOUTH AFRICA

NATIONAL CERTIFICATE
FITTING AND MACHINING THEORY N1
TIME: 3 HOURS
MARKS: 100

INSTRUCTIONS AND INFORMATION

1. Answer ALL the questions in SECTION A
2. Answer ALL FOUR questions in SECTION B
3. Answer either question 1.1 OR 1.2 of QUESTION 1
4. Read ALL the questions carefully.
5. Number the answers according to the numbering system used in this question paper.
6. Write neatly and legibly

SECTION A: GENERAL FITTING

QUESTION 1: OCCUPATIONAL SAFETY

1.1 State FIVE safety measures when using hand tools in a fitting workshop. **[5]**

OR

1.2 Indicate whether the following statements are TRUE or FALSE. Choose the answer and write only 'true' or 'false' next to the question number (1.2.1 – 1.2.5) in the ANSWER BOOK.

1.2.1 Every employee shall carry out any lawful order given to him and shall obey the safety rules and procedures laid down by his employer or by anyone authorised thereto by his employer.

1.2.2 An employer or a user of machinery , as the case may be , shall not permit a person to enter a workplace or premises where machinery is used and where the safety of such persons is likely to be places at risk, unless such person enters such a workplace or premises with the express or implied permission of and subject to the conditions laid down by such employer or user of machinery: provided that this sub-regulation shall not apply in respect of a person entitled by law to enter such workplace or premises.

1.2.3 Every shaft, pulley, wheel, gear, sprocket, coupling, collar, clutch, friction drum or similar object to be securely fenced or guarded except set screws, keys or bolts on revolving shafts, couplings, collars, friction drums, clutches wheels, pulleys, gears.

1.2.4 Where machinery constitutes a danger to persons, the employer or user of machinery concerned shall cause the premises in question to be enclosed, and where such premises shall be kept closed and locked so that workers may not come and go freely as they please.

1.2.5 If a person operates any machinery which requires constant attention in order to avoid accidents, he shall under no circumstances leave his post while such machinery is in operation, unless he is relieved by any person – as long as the machine is being watched during in his absence.

(5 × 1) **[5]**

Copyright reserved

QUESTION 2: MEASURING INSTRUMENTS

2.1 Make a neat drawing of only the following measuring instruments with at least FOUR labelled parts.

2.1.1 A metric inside micrometer.

2.1.2 A vernier height gauge.

(2 × 4) (8)

2.2 State TWO advantages of the digital Vernier caliper. (2)

2.3 Give the degree of accuracy of a metric micrometer. (1)
[11]

QUESTION 3: SCREW THREADS

3.1 Write down the FOUR screw thread-terms listed between (3.1.1–3.1.4) and give the definition of each.

3.1.1 Lead

3.1.2 Flank

3.1.3 Included angle

3.1.4 The included helix angle

(4 × 1) (4)

3.2 Explain the differences in application and thread form (shape) between a Square Thread and an Acme Thread. (2)

3.3 Calculate the depth of a V-screw thread (M20 x 2, 5).
Take depth = 0.7 x pitch (1)
[7]

QUESTION 4: HAND TOOLS

4.1 List the question numbers from 4.1.1–4.1.5 and name the hammers as listed in FIGURE 1 by writing the answers next to the numbers (4.1.1–4.1.5) in the ANSWER BOOK.

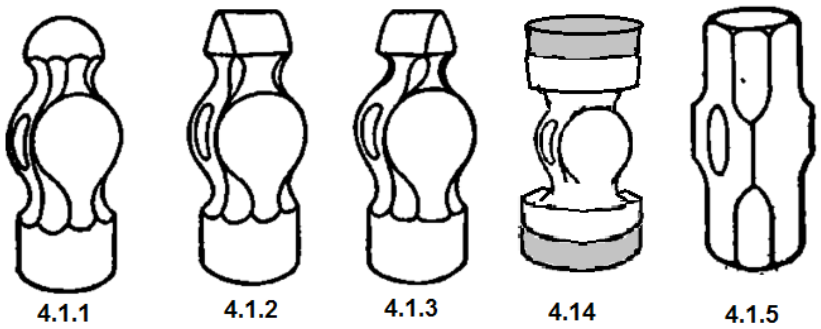

FIGURE 1 **[5]**

QUESTION 5: METALS AND PLASTICS

5.1 Name THREE types of carbon steel. (3)

5.2 State ONE property and ONE application of the following non-ferrous metals:

5.2.1 Copper

5.2.2 Tin

(2 × 2) (4)

5.3 Name THREE steel alloying elements commonly used in the manufacture of machine components. (3)

5.4 State TWO properties of chromium which make it suitable for use in engineering (2)

[12]

QUESTION 6: MARKING OFF

6.1 Define the following terms when interpreting a drawing during marking off procedures:

6.1.1 Reference line

6.1.2 Reference point

(2 × 1) (2)

6.2 Explain two methods of getting the centre accurate at the end of a round shaft. (2)

6.3 What would you use on a surface table for supporting a round shaft during the marking off process? (1)

[5]

QUESTION 7: KEYS AND KEYWAYS

7.1 Make a neat sketch of the following types of keys:

7.1.1 Parallel key

7.1.2 Feather key

(2 × 2) (4)

7.2 Name TWO methods or machining processes for producing an external keyway. (2)

[6]

QUESTION 8: FASTENERS

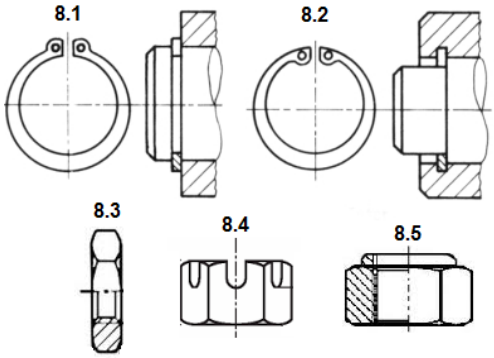

FIGURE 2

Identify the different types of fasteners in FIGURE 2 by writing the answers next to the numbers (8.1–8.5) in the ANSWER BOOK. **[5]**

QUESTION 9: HAND TAPS, STOCKS AND DIES AND REAMERS

9.1 Two Ø12 holes were made, one was drilled and the other one was reamed.

Which one is more accurate? Motivate your answer. **[4]**

TOTAL SECTION A: 60

SECTION B: MACHINES

ANSWER ONLY FOUR OF THE QUESTIONS IN SECTION B

QUESTION 10: DRILLING MACHINES

10.1 Name the THREE main types of drilling machines commonly found in an engineering workshop. (3)

10.2 The cutting speed for stainless steel is 15 metres per minute (m/min) and the diameter of the drill bit is 16mm.

Calculate the speed of the drilling machine in revolutions per minute (RPM) – in order to perform this drilling operation. (3)

10.3 Indicate whether the following statements are TRUE or FALSE. Choose the answer and write only 'true' or 'false' next to the question number (10.4.1–10.4.4) in the ANSWER BOOK.

10.3.1 The process which allows for a 90 degree screw head to fit flush with the metal surface is called counter-sinking.

10.3.2 The feed of a sensitive drilling machine is transmitted by a gear-box mechanism.

10.3.3 A chuck key is used for removing taper-shank drill bit from a machine spindle.

10.3.4 The maximum diameter drill bit which a column drilling machine may accommodate, is 16 mm.

(4 × 1) (4)

[10]

QUESTION 11: GRINDERS AND MACHINE CUTTING TOOLS

11.1 Name FOUR main components of a pedestal grinding machine. (4)

11.2 Draw the lathe cutting tool used for creating a specific radius to complete the workpiece below. (2)

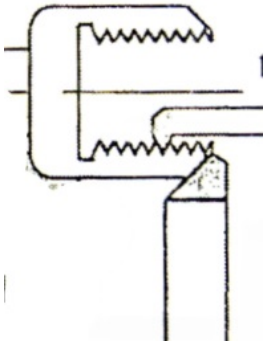

11.3 Name the cutting tool angles in FIGURE 3 by writing the answers next to the numbers (11.3.1–11.3.4) in the ANSWER BOOK. (4)

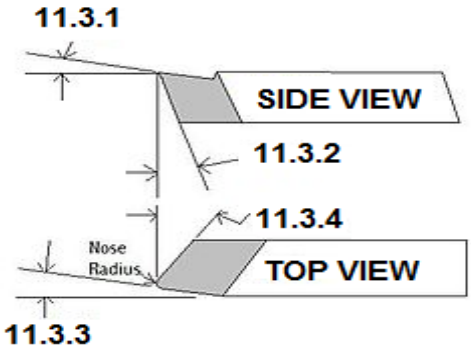

FIGURE 3 **[10]**

QUESTION 12: CENTRE LATHE

Identify the lathe parts (components) in FIGURE 4 and list them from 12.1.1 - 12.1.6 in your answer book. (6)

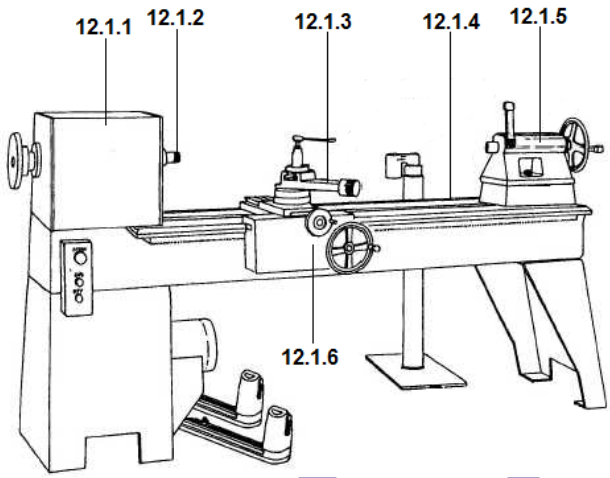

FIGURE 4

12.2 Explain the functions of the following lathe components in Figure 4 above:

A 12.1.3

B 12.1.5 (2)

12.3 Name TWO disadvantages of a CNC lathe when comparing it with a conventional centre lathe. (2)

[10]

QUESTION 13: MILLING MACHINE

13.1 State FOUR safety precautions while working on a milling machine. (4)

13.2 Name the THREE milling machine parts on FIGURE 5 below by writing the answers next to the numbers (13.2.1 – 13.1.3) in the ANSWER BOOK. (3)

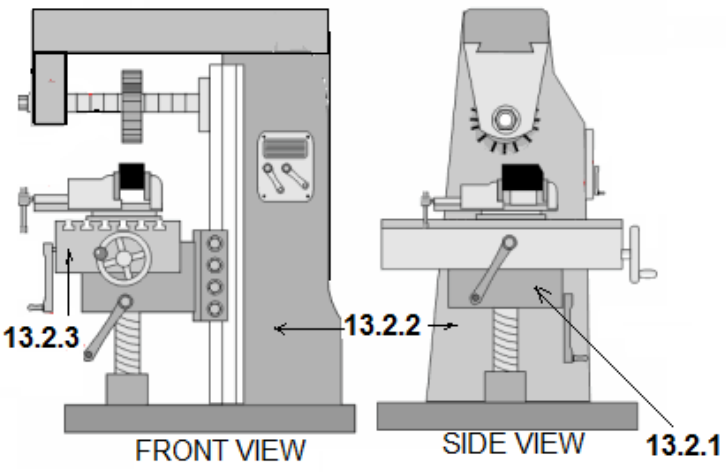

FIGURE 5

13.4 Explain the functions of the THREE milling machine parts listed above by listing the numbers (13.3.1 – 13.3.3), the part name and then the description of its use. (3)

[10]

TOTAL SECTION B: 40
GRAND TOTAL: 100

Copyright reserved

FITTING AND MACHINING THEORY N1

FORMULA SHEET

Any applicable formula may also be used.

1. $V = \pi \times D \times N$

2. $w = feed/stroke \times strokes/min \times t$
$w = toevoer/slag \times slae/min \times t$

3. $Strokes/min = \dfrac{S}{Length\ of\ \ stroke} \times Ratio$

$Slae/min = \dfrac{S}{Lengte\ van\ slag} \times Verhouding$

4. $h = \dfrac{D}{6}$

5. $w = \dfrac{D}{4}$

Copyright reserved