higher education & training

Department:
Higher Education and Training
REPUBLIC OF SOUTH AFRICA

NATIONAL CERTIFICATE

FITTING AND MACHINING THEORY N1

(11021871)

2 August 2021 (X-paper)
09:00–12:00

Drawing instruments and nonprogrammable calculators may be used.

This question paper consists of 9 pages and 1 formula sheet.

134Q1G2102

Copyright reserved

DEPARTMENT OF HIGHER EDUCATION AND TRAINING
REPUBLIC OF SOUTH AFRICA

NATIONAL CERTIFICATE
FITTING AND MACHINING THEORY N1
TIME: 3 HOURS
MARKS: 100

INSTRUCTIONS AND INFORMATION

1. Answer all the questions.
2. Read all the questions carefully.
3. Number the answers according to the numbering system used in this question paper.
4. All sketches must be neat, reasonably large and in good proportion.
5. Label all sketches.
6. Write neatly and legibly.

Copyright reserved

SECTION A: GENERAL PRACTICE

QUESTION 1: OCCUPATIONAL SAFETY

1.1 Explain the regulations with regard to:

1.1.1 Lifelines

1.1.2 Hard hats

(2 × 1) (2)

1.2 List THREE instances where compressed air should NOT be used. (3)

[5]

QUESTION 2: MEASURING INSTRUMENTS

2.1 FIGURE 1 below shows a diagram of an outside micrometer.

Label the parts by writing down the name of each next to the number (2.1.1– 2.1.7) in the ANSWER BOOK.

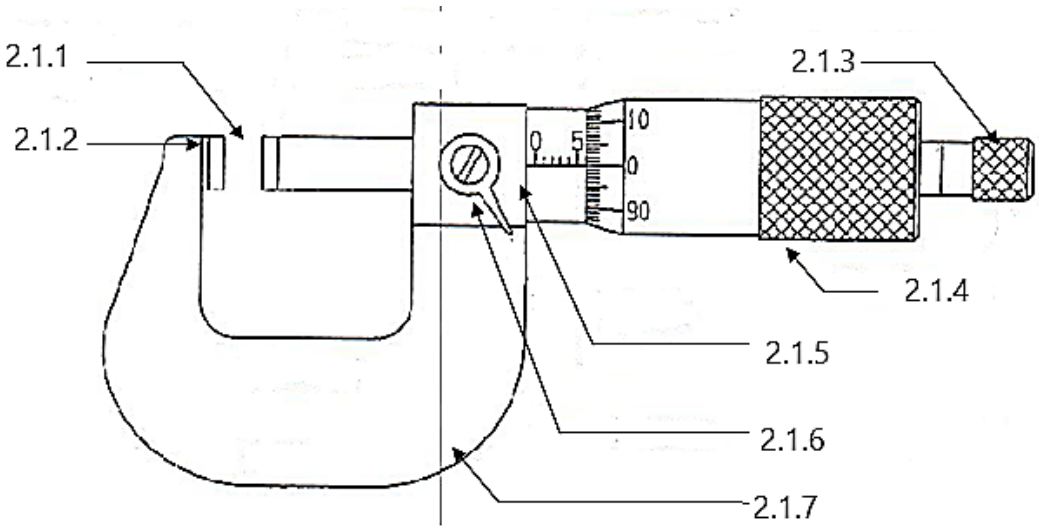

FIGURE 1 (7)

2.2 List TWO uses of a dial test indicator. (2)

2.3 List TWO applications of a vernier calliper. (2)

[11]

QUESTION 3: SCREW THREADS

3.1 Define the following terms that are used to describe screw threads:

3.1.1 Pitch

3.1.2 Root diameter

(2 × 2) (4)

3.2 Calculate the depth of a 30 mm metric screw thread with a pitch of 2,5 mm. (2)
[6]

QUESTION 4: HAND TOOLS

4.1 A hacksaw cuts metals with the use of a blade.

List TWO causes of blade failure on a hacksaw. (2)

4.2 Name TWO types of chisels. (2)

4.3 Give ONE use of each of the following:

4.3.1 Round file

4.3.2 Triangular file

(2 × 1) (2)
[6]

QUESTION 5: METALS AND PLASTICS

5.1 Non-ferrous metals contain no iron.

Name FOUR commonly used non-ferrous metals. (4)

5.2 Heat treatment is a process which changes the physical properties of a metal by first heating the metal and then cooling it off.

Explain the purpose of the following heat treatment processes:

5.2.1 Hardening

5.2.2 Tempering

(2 × 2) (4)

Copyright reserved

5.3 Steel used in a workshop are painted with a colour specified by the SABS to identify them.

Name the colours for the following types of steel:

5.3.1 Case hardening steel

5.3.2 Cast steel

5.3.3 Pipeline steel

5.3.4 Steel for pressure containers

(4 × 1) (4)
[12]

QUESTION 6: MARKING OFF

6.1 Specific tools and accessories are used for marking off.

Give ONE use for the each of the following marking off tools:

6.1.1 Dividers

6.1.2 Centre punch

6.1.3 Surface gauge

(3 × 1) (3)

6.2 When marking off, it is sometimes necessary to place the work piece at 90° to the surface of the table.

Which accessory would you use to clamp the workpiece? (1)

6.3 Give ONE use of a 'V' block. (1)
[5]

QUESTION 7: KEYS AND KEYWAYS

7.1 Give TWO uses of a feather key. (2)

7.2 A 60 mm shaft has to be fitted with a feather key.

Calculate the height and width of the key. (4)
[6]

Copyright reserved

QUESTION 8: FASTENERS

8.1 Components can be fixed together permanently or temporarily.

Name TWO methods that are used to fix together components permanently (2)

8.2 Name TWO types of fasteners that can be used to join components on a temporary basis. (2)
[4]

QUESTION 9: HAND TAPS, STOCKS, DIES AND REAMERS

9.1 Name THREE types of taps. (3)

9.2 Which tap would you use to start the thread? (1)

9.3 Where would you find the tap size? (1)
[5]

TOTAL SECTION A: 60

SECTION B

QUESTION 10: DRILLING MACHINES

10.1 The radial drilling machine is suited for flexible work.

List TWO features of the machine which demonstrate this flexibility. (2)

10.2 FIGURE 2 below shows a portable hand drilling machine. Label the parts by writing down the name of each next to the number (10.2.1–10.2.4) in the ANSWER BOOK.

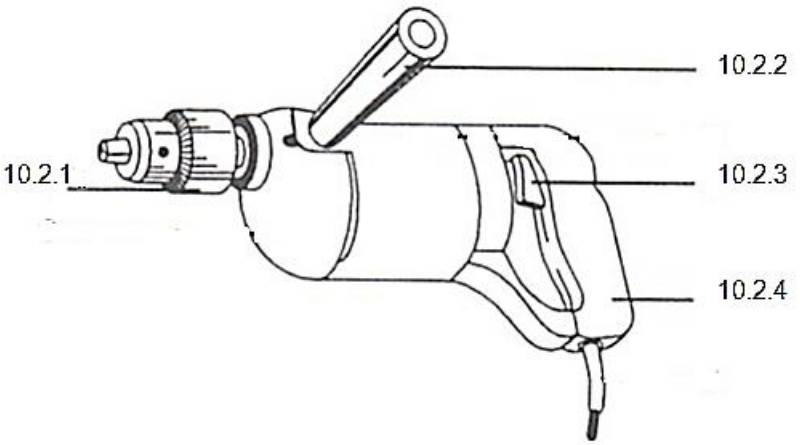

FIGURE 2 (4)

10.3 If the cutting speed for mild steel is 20 metres per minute and the machine runs at 220 r/min, determine the drill diameter that should be used. (4)

[10]

QUESTION 11: GRINDING MACHINES AND MACHINE CUTTING TOOLS

11.1 FIGURE 3 below shows a pedestal grinding wheel.

Label the parts by writing down the name of each next to the number (11.1.1–11.1.4) in the ANSWER BOOK.

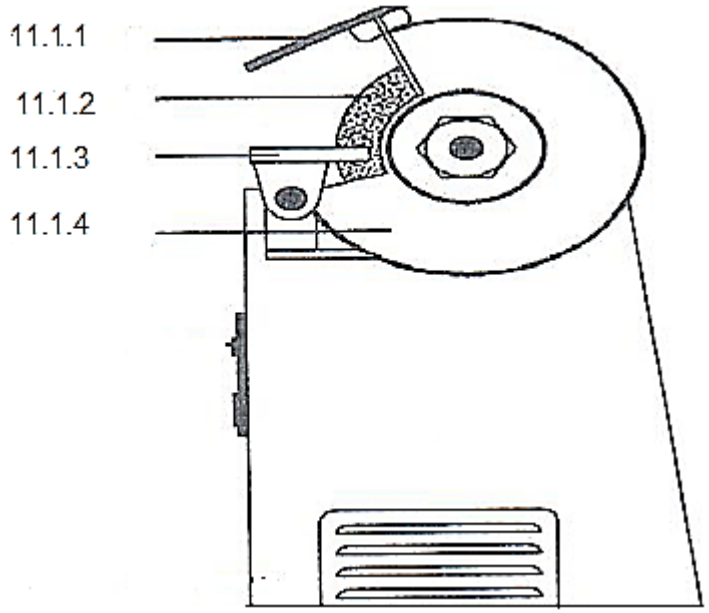

(4)

FIGURE 3

11.2 Name THREE types of grinding machines. (3)

11.3 One must always ensure that a work rest is fitted on a grinding machine.

What is the purpose of a work rest? (2)

11.4 What must the size of the gap between the work rest and the wheel be? (1)

[10]

QUESTION 12: THE CENTRE LATHE

12.1 FIGURE 4 below shows a diagram of a lathe.

Label the parts by writing down the name of each next to the number (12.1.1–12.1.6) in the ANSWER BOOK.

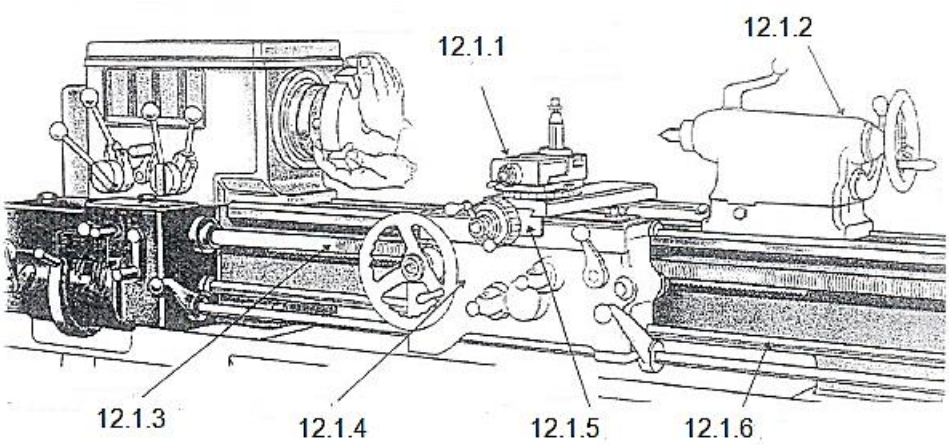

(6)

FIGURE 4

12.2 Name TWO functions of the feed shaft on a lathe. (2)

12.3 Name TWO advantages of using a face plate. (2)

[10]

QUESTION 13: THE MILLING MACHINE

13.1 The milling machine is used for various operations in industry. There are safety measures that need to be followed when using these machines.

List THREE basic safety measures to follow when using the milling machine. (3)

13.2 FIGURE 5 below shows a diagram of a milling machine.

Label the parts (13.2.1–13.2.7) in the ANSWER BOOK.

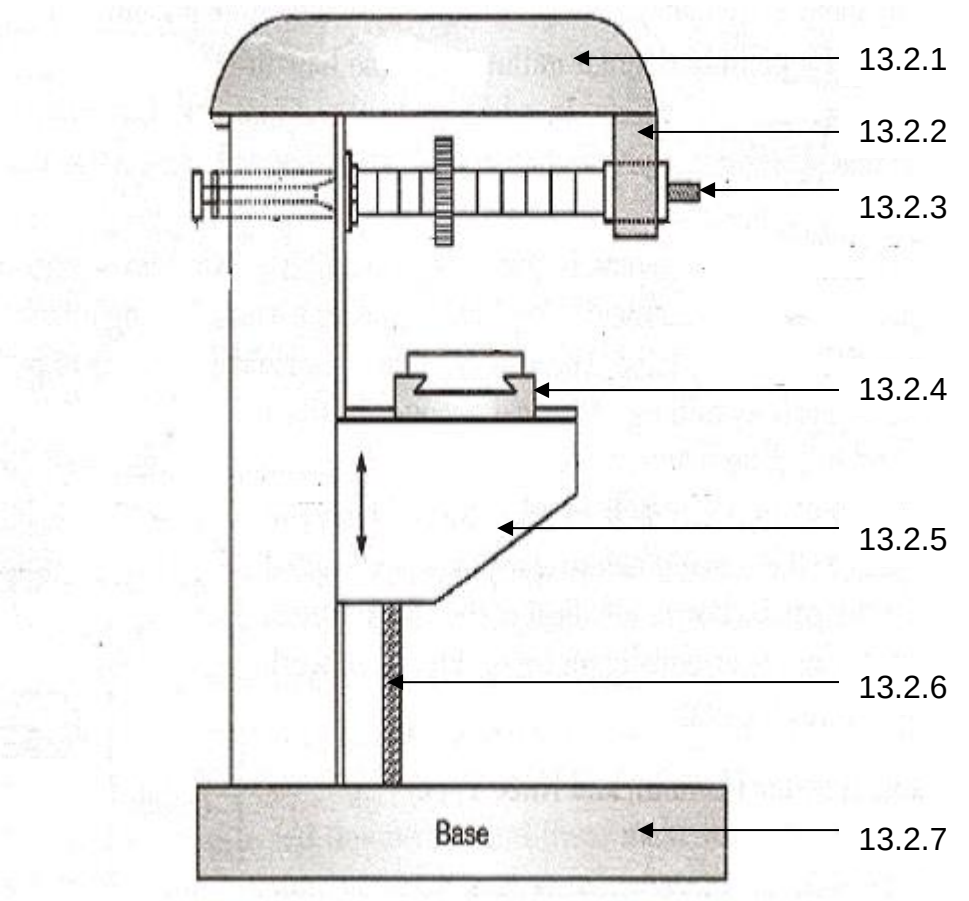

FIGURE 5 (7)
[10]

TOTAL SECTION B: 40
GRAND TOTAL: 100

Copyright reserved

FITTING AND MACHINING THEORY N1

FORMULA SHEET

Any applicable formula may also be used.

1. $V = \pi \times D \times N$

2. *w = feed/stroke × strokes/min × t*
w = toevoer/slag × slae/min × t

3. $Strokes/min = \frac{S}{Length\ of\ \ stroke} \times Ratio$

$Slae/min = \frac{S}{Lengte\ van\ slag} \times Verhouding$

4. $h = \frac{D}{6}$

5. $w = \frac{D}{4}$

6. *Depth (d) = 0,613 × P*
Diepte (d) = 0,613 × P

Copyright reserved