higher education & training

Department:
Higher Education and Training
REPUBLIC OF SOUTH AFRICA

T690**(E)**(A2)T

NATIONAL CERTIFICATE

FITTING AND MACHINING THEORY N1

(11021871)

2 August 2019 (X-Paper)
09:00–12:00

Calculators and drawing instruments may be used.

This question paper consists of 8 pages and 1 formula sheet.

Copyright reserved

DEPARTMENT OF HIGHER EDUCATION AND TRAINING
REPUBLIC OF SOUTH AFRICA

NATIONAL CERTIFICATE
FITTING AND MACHINING THEORY N1
TIME: 3 HOURS
MARKS: 100

NOTE: If you answer more than the required number of questions only the required number will be marked. Clearly cross out ALL work you do NOT want to be marked.

INSTRUCTIONS AND INFORMATION

1. Answer ALL the questions in SECTION A except QUESTION 1 where either QUESTION 1.1 OR QUESTION 1.2 must be answered.
2. Answer ALL the questions in SECTION B.
3. Read ALL the questions carefully.
4. Number the answers according to the numbering system used in this question paper.
5. ALL sketches must be neat, reasonably large and in good proportion.
6. Label ALL sketches.
7. Write neatly and legibly.

Copyright reserved

SECTION A: GENERAL PRACTICE

QUESTION 1: OCCUPATIONAL SAFETY

1.1 The Occupational Health and Safety Act No. 85 of 1993 prescribes certain regulations regarding the safeguarding of machinery.

List FIVE safety measures that every employer or machinery user must follow to safeguard machinery. (5)

OR

1.2 The Minerals Act No. 50 of 1991 contains prescriptions regarding drill-sharpening shops or other workshops where harmful dust may be produced.

1.2.1 List THREE measures that can be implemented to reduce the dangers caused by harmful dust. (3)

1.2.2 Give TWO measures that can be implemented to prevent the liberation of dust into the atmosphere. (2)

[5]

QUESTION 2: MEASURING INSTRUMENTS

2.1 List THREE uses of a vernier height gauge. (3)

2.2 FIGURE 1 depicts a vernier protractor.

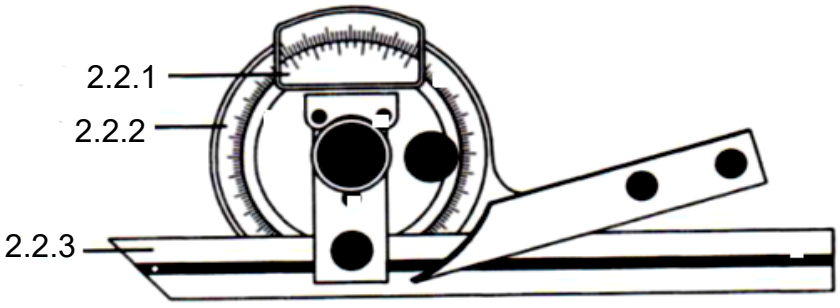

FIGURE 1

Label the parts of the vernier protractor by writing only the answer next to the question number (2.2.1–2.2.3) in the ANSWER BOOK. (3 × 1) (3)

2.3 What is a vernier protractor used for? (2)

2.4 What is a telescopic gauge used for? (2)

2.5 A feeler gauge is used to measure very small gaps.

How accurate can a feeler gauge measure? (1)

[11]

Copyright reserved

QUESTION 3: SCREW THREADS

3.1 Define each of the following screw-thread terms:

3.1.1 External thread

3.1.2 Internal thread

(2 × 2) (4)

3.2 Calculate the depth of a 20 mm metric screw thread with a pitch of 3,5 mm. (2)
[6]

QUESTION 4: HAND TOOLS

4.1 Give ONE use of each of the following hammers:

4.1.1 Sledge hammer

4.1.2 Soft-faced hammer

4.1.3 Ball-peen hammer

(3 × 1) (3)

4.2 What is the reason for the set on a hacksaw blade? (2)

4.3 What is likely to happen if you leave the blade of a hacksaw tensioned? (1)
[6]

QUESTION 5: METALS AND PLASTICS

5.1 Cast iron is a rough form of the iron-carbon alloy. One can distinguish between two types of cast iron based on its colour.

Name TWO types of cast iron. (2)

5.2 Medium-carbon steel is stronger than low-carbon steel and more expensive to produce.

List the uses of medium-carbon steel. (4)

5.3 Hardening is a heat-treatment process that hardens metal by heating and cooling or quenching the metal.

Discuss the cooling process of hardening with emphasis on the rate of cooling. (3)

5.4 Annealing is a heat-treatment process

What effect does annealing have on metal? (3)
[12]

QUESTION 6: MARKING OFF

6.1 What is a scriber used for? (1)

6.2 Give TWO uses of each of the following marking-off tools:

6.2.1 Dividers

6.2.2 Jenny callipers

(2 × 2) (4)
[5]

QUESTION 7: KEYS AND KEYWAYS

7.1 Keyways can be cut on different machines using different methods.

Name TWO methods to cut external keyways. (2)

7.2 Calculate the depth of a keyway for a key to be fitted to a shaft with a diameter of 60 mm. (2)

7.3 What are the reasons for using keys to secure the shaft and gear together in a driving system? (2)
[6]

QUESTION 8: FASTENERS

8.1 A split pin is an auxiliary fastening device.

Explain how to fit a split pin onto a nut to prevent the nut from working loose. (3)

8.2 What are circlips used for? (1)
[4]

QUESTION 9: HAND TAPS, STOCKS, DIES AND REAMERS

9.1 A stock and a die are used together to cut an external thread.

What is the function of each tool in the thread-cutting process? (2)

9.2 The most commonly used die is the circular split die.

Why is it called a circular split die? (1)

9.3 How can the size of a circular split die be adjusted? (1)

9.4 Solid dies are also known as nut dies.

Which tool is used to hold and turn solid dies? (1)
[5]

TOTAL SECTION A: 60

SECTION B

QUESTION 10: DRILLING MACHINES

10.1 Drilling machines are the most used equipment in a workshop.

List FOUR safety procedures to follow when working with drilling machines. (4)

10.2 FIGURE 2 depicts a radial drilling machine.

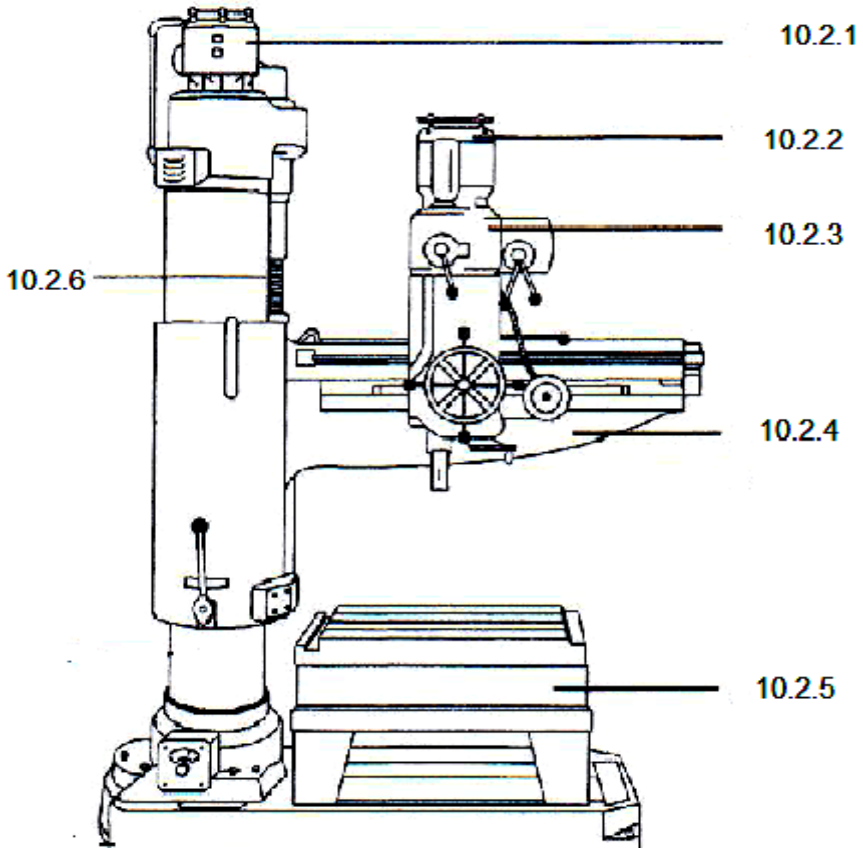

FIGURE 2

Label the parts of the radial drilling machine by writing only the answer next to the question number (10.2.1–10.2.6) in the ANSWER BOOK. (6 × 1) (6)

[10]

QUESTION 11: GRINDING MACHINES AND MACHINE-CUTTING TOOLS

11.1 Name TWO factors to consider when choosing a grinding wheel. (2)

11.2 Give TWO advantages of a diamond-tipped wheel dresser. (2)

Copyright reserved

11.3 FIGURE 3 depicts a pedestal grinding machine.

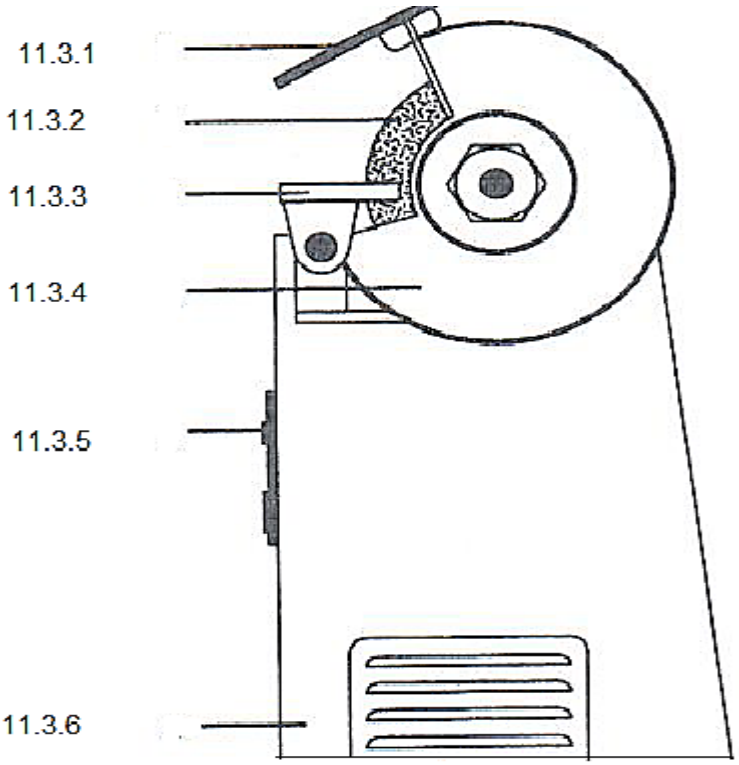

FIGURE 3

Label the parts of the pedestal grinding machine by writing only the answer next to the question number (11.3.1–11.3.6) in the ANSWER BOOK. (6 × 1) (6)

[10]

QUESTION 12: THE CENTRE LATHE

12.1 FIGURE 4 depicts a centre lathe.

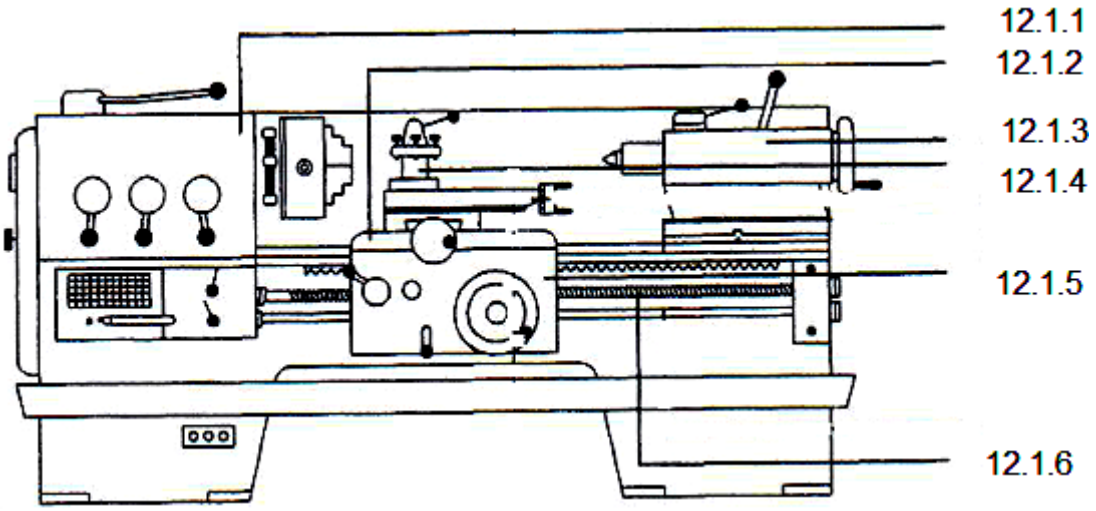

FIGURE 4

Label the parts of the centre lathe by writing only the answer next to the question number (12.1.1–12.1.6) in the ANSWER BOOK. (6 × 1) (6)

12.2 Most common turning operations can be done between the centres of a lathe.

List FOUR types of cutting-tool bits that can be used on the lathe. (4)
[10]

QUESTION 13: THE MILLING MACHINE

13.1 List FOUR basic safety measures for the operator to follow when using a milling machine. (4)

13.2 Explain the functions of each of the following milling-machine attachments:

13.2.1 Machine vice

13.2.2 Dividing head

13.2.3 Adjustable tailstock

13.2.4 Adjustable boring head

(4 × 1) (4)

13.3 Name TWO of the most common types of milling machines. (2)
[10]

TOTAL SECTION B: 40
GRAND TOTAL: 100

Copyright reserved

FORMULA SHEET

Any applicable formula may also be used.

1. $V = \pi \times D \times N$

2. $w = \text{feed/stroke} \times \text{strokes/min} \times t$

3. $\text{Strokes/min} = \dfrac{S}{\text{Length of stroke}} \times \text{Ratio}$

4. $h = \dfrac{D}{6}$

5. $w = \dfrac{D}{4}$

Copyright reserved