higher education & training

Department:
Higher Education and Training
REPUBLIC OF SOUTH AFRICA

**NATIONAL CERTIFICATE**

# FITTING AND MACHINING THEORY N1

(11021871)

**12 April 2021 (X-paper)**
**09:00–12:00**

**This question paper consists of 7 pages and 1 formula sheet.**

130Q1A2112

Copyright reserved

# DEPARTMENT OF HIGHER EDUCATION AND TRAINING
# REPUBLIC OF SOUTH AFRICA

NATIONAL CERTIFICATE
FITTING AND MACHINING THEORY N1
TIME: 3 HOURS
MARKS: 100

---

**INSTRUCTIONS AND INFORMATION**

1. Answer all the questions.
2. Read all the questions carefully.
3. Number the answers according to the numbering system used in this question paper.
4. Write neatly and legibly.

---

**SECTION A: GENERAL PRACTICE**

## QUESTION 1: OCCUPATIONAL SAFETY

1.1 Explain THREE instances where compressed air should NOT be used. (3)

1.2 Explain the precautions to be taken in areas where noxious or flammable fumes are likely to be present in sufficient quantities to endanger the safety of any person. (2)

**[5]**

## QUESTION 2: MEASURING INSTRUMENTS

2.1 Briefly explain how one would take a measurement of an inside diameter with a telescopic gauge. (3)

2.2 State whether the following statements are TRUE or FALSE by writing only 'True' or 'False' next to the question number (2.2.1–2.2.4) in the ANSWER BOOK.

2.2.1 An inside micrometer is used to measure the inside of two parallel surfaces.

2.2.2 A feeler gauge is used to measure the pitch of a thread.

2.2.3 An outside micrometer is used to measure angles.

2.2.4 A telescopic gauge is used to pick up inside measurements.

(4 × 1) (4)

2.3 Name TWO uses of a depth micrometer. (2)

2.4 Name TWO uses of a Vernier height gauge. (2)

**[11]**

## QUESTION 3: SCREW THREADS

3.1 There are multi-start screw threads and single threads. Explain what is meant by a *single thread*. (2)

3.2 Explain the difference between an *external thread* and an *internal thread.* ..(2)

3.3 Calculate the depth of a M 40 screw thread with a pitch of 8 mm. (2)

(3 × 2) **[6]**

## QUESTION 4: HAND TOOLS

4.1 Files can be classified according to the type of cut.

List THREE types of cuts that a file could have. (3)

4.2 Give ONE use of each for the following files

4.2.1 Half-round file

4.2.2 Triangular file

4.2.3 Square file

(3 × 1) (3)
**[6]**

## QUESTION 5: METALS AND PLASTICS

5.1 A nonferrous alloy is a mixture of two or more non-ferrous metals.

Name FOUR non-ferrous alloys. (4)

5.2 Lead is a non-ferrous metal. Give FOUR uses of lead. (4)

5.3 High speed steel is an alloy steel. Give TWO uses of high speed steel. (2)

5.4 Plasticity is a property of metal.

Explain what is meant by *plasticity*. (2)
**[12]**

## QUESTION 6: MARKING OFF

6.1 Marking-off media are used to make scribed lines easier to see.

Name THREE marking media that are used when marking off. (3)

6.2 What is a steel beam trammel (beam compass) used for? (1)

6.3 A pencil cannot be used for marking metal.

Which tool is used for marking off metal instead of a pencil? (1)
**[5]**

Copyright reserved 

## QUESTION 7: KEYS AND KEYWAYS

7.1 FIGURE 1 shows a drawing of a pulley that is keyed onto a tapered shaft. Answer the questions related to the figure.

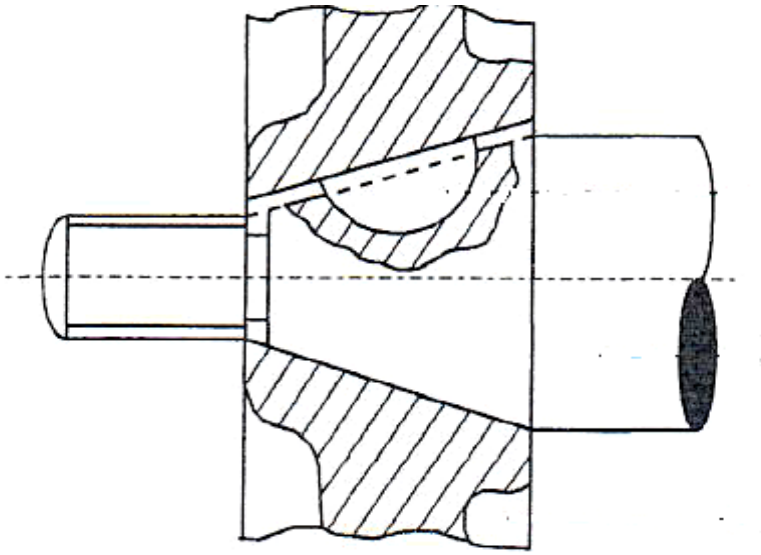

**FIGURE 1**

7.1.1 Name of the key used in FIGURE 1.

7.1.2 Give ONE use for the key in FIGURE 1.

(2 × 1) (2)

7.2 Calculate the thickness and width of a key that has to be fitted to a shaft with a diameter of 250 mm. (4)
**[6]**

## QUESTION 8: FASTENERS

8.1 A split pin prevents bolts from coming loose. Explain how one would use a split pin. (3)

8.2 Explain the purpose of a flat washer. (1)
**[4]**

## QUESTION 9: HAND TAPS, STOCKS, DIES AND REAMERS

9.1 List THREE thread cutting faults. (3)

9.2 What is the purpose of using a reamer? (2)
**[5]**

**TOTAL SECTION A: 60**

Copyright reserved 

## SECTION B

## QUESTION 10: DRILLING MACHINES

10.1 Explain TWO advantages of using a cutting fluid when performing a drilling operation. (2)

10.2 A 13 mm drill is used to drill a hole in a mild steel workpiece. Calculate the cutting speed of mild steel in millimetres per second if the machine rotates at 612 revolutions per minute. (Use the formula below.)

$$N=\frac{1000S}{\pi D}$$

Where S=m/min
D=mm
N=rpm (6)

10.3 Briefly explain the meaning of the answer in 10.2. (2)
**[10]**

## QUESTION 11: GRINDING MACHINES AND MACHINE CUTTING TOOLS

11.1 FIGURE 2 depicts a cross-section of a grinding machine. Name the parts (11.1.1–11.1.7) next to the question number in the ANSWER BOOK. (7)

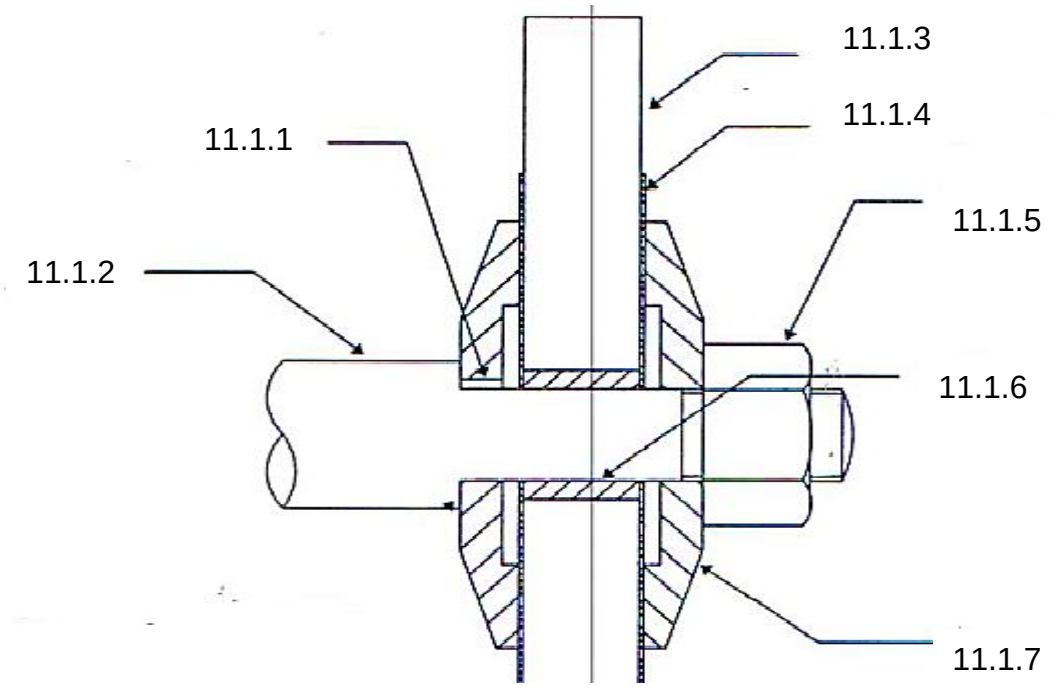


**FIGURE 2**

11.2 What is the purpose of the tool rest on a grinding machine? (1)

11.3 Why does a grinding wheel spindle have a left-hand thread at one end and a right hand thread at the other end? (2)
**[10]**

## QUESTION 12: THE CENTRE LATHE

12.1 Three- and four-jaw chucks are used to clamp workpieces.

List THREE advantages of using a three-jaw chuck. (3)

12.2 List THREE disadvantages of using a three-jaw chuck. (3)

12.3 Name TWO taper turning methods used in practice. (2)

12.4 What are the TWO advantages of cutting screw thread with the compound slide method? (2)

**[10]**

## QUESTION 13: THE MILLING MACHINE

13.1 The milling machine can be used to machine many different components with the use of different cutters.

Name SIX operations that can be done on a milling machine. (6)

13.2 What is the function of a dividing head when used on a milling machine? (2)

13.3 What is the rotation direction of a end mill cutter; clockwise or anti clockwise? (1)

13.4 What is the function of a ripper cutter? (1)

**[10]**

**TOTAL SECTION B: 40**
**GRAND TOTAL: 100**

Copyright reserved

**FITTING AND MACHINING THEORY N1**

**FORMULA SHEET**

Any applicable formula may also be used.

*1.* $V = \pi \times D \times N$

*2.* *w = feed/stroke × strokes/min × t*
*w = toevoer/slag × slae/min × t*

*3.* $Strokes/min = \frac{S}{Length\ of\ \ stroke} \times Ratio$

$Slae/min = \frac{S}{Lengte\ van\ slag} \times Verhouding$

*4.* $h = \frac{D}{6}$

*5.* $w = \frac{D}{4}$

6. $N = \frac{1000\ S}{\pi d}$

Where S=m/min (cutting speed of material)
D=mm
N=rpm

Copyright reserved