higher education & training

Department:
Higher Education and Training
REPUBLIC OF SOUTH AFRICA

NATIONAL CERTIFICATE

FITTING AND MACHINING THEORY N1

(11021871)

7 April 2020 (X-paper)
09:00–12:00

This question paper consists of 7 pages and 1 formula sheet.

128Q1A2007

Copyright reserved

DEPARTMENT OF HIGHER EDUCATION AND TRAINING
REPUBLIC OF SOUTH AFRICA

NATIONAL CERTIFICATE
FITTING AND MACHINING THEORY N1
TIME: 3 HOURS
MARKS: 100

INSTRUCTIONS AND INFORMATION

1. Answer all the questions.
2. Read all the questions carefully.
3. Number the answers according to the numbering system used in this question paper.
4. All sketches must be neat, reasonably large and in good proportion.
5. Label all sketches.
6. Write neatly and legibly.

Copyright reserved

SECTION A: GENERAL PRACTICE

QUESTION 1: OCCUPATIONAL SAFETY

1.1 Explain the prescriptions in the Machinery and Occupational Safety Act No. 6 of 1983 with regard to the illumination of machinery where natural light is inadequate or where machinery is used at night. (3)

1.2 Explain the precautions to follow when using artificial light. (2)
[5]

QUESTION 2: MEASURING INSTRUMENTS

2.1 FIGURE 1 shows a diagram of an outside micrometer.

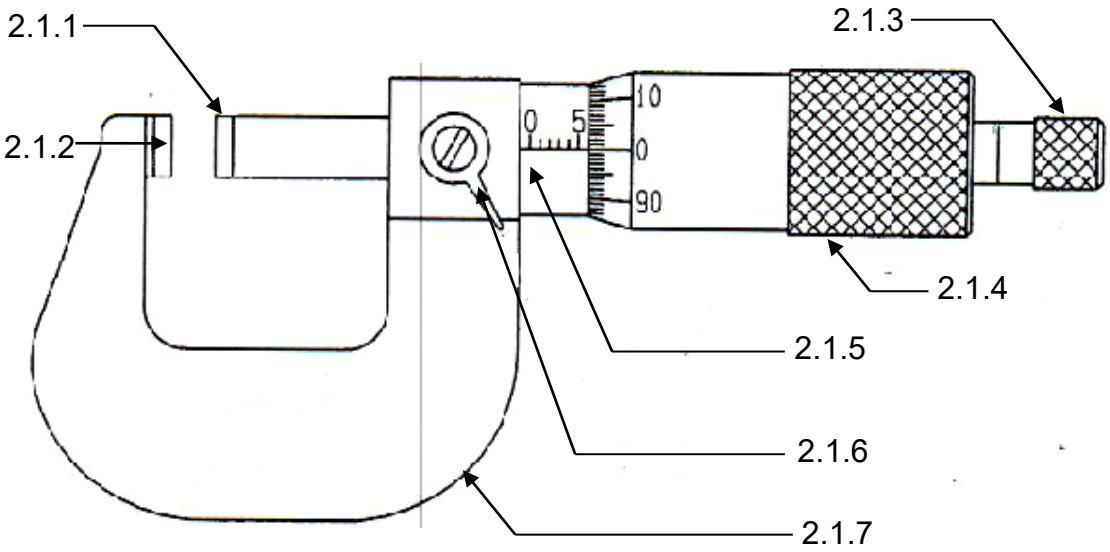

FIGURE 1

Label the parts by writing only the answer next to the question number (2.1.1–2.1.7) in the ANSWER BOOK. (7 × 1) (7)

2.2 Explain how to adjust a micrometer to ensure that a correct reading is given. (4)
[11]

QUESTION 3: SCREW THREADS

3.1 Give THREE advantages of an Acme screw thread. (3)

3.2 List THREE uses of a square screw thread. (3)
[6]

QUESTION 4: HAND TOOLS

4.1 List FOUR causes of blade failure on a hacksaw. (4)

4.2 What can happen if using a hacksaw too fast? (2)
[6]

QUESTION 5: METALS AND PLASTICS

5.1 Name FIVE methods to distinguish between different metals. (5)

5.2 Explain the process and purpose of each of the following heat-treatment processes:

5.2.1 Hardening

5.2.2 Tempering

(2 × 2) (4)

5.3 Explain each of the following properties of metal:

5.3.1 Toughness

5.3.2 Brittleness

5.3.3 Elasticity

(3 × 1) (3)
[12]

QUESTION 6: MARKING OFF

6.1 Give TWO reasons why marking off is done on workpieces. (2)

6.2 Give TWO specific uses of dividers. (2)

6.3 Give ONE use of a centre punch. (1)
[5]

QUESTION 7: KEYS AND KEYWAYS

7.1 Give ONE use of a rectangular key. (1)

7.2 Why does a gib-head taper key have a head on one side? (1)

7.3 A 40 mm diameter shaft must be fitted with a feather key.

Calculate the height and width of the key. (4)
[6]

Copyright reserved

QUESTION 8: FASTENERS

8.1 Explain the working principle of a spring washer. (3)

8.2 Name ONE type of head on a self-tapping screw. (1)
[4]

QUESTION 9: HAND TAPS, STOCKS, DIES AND REAMERS

9.1 Name the THREE taps in a set of taps. (3)

9.2 What is the function of a tap wrench? (2)
[5]

TOTAL SECTION A: 60

SECTION B

QUESTION 10: DRILLING MACHINES

10.1 List FOUR features of a radial machine that demonstrate its work flexibility. (4)

10.2 Give TWO reasons why a drilled hole would be larger in diameter than the drill used. (2)

10.3 Determine the drill diameter that should be used if the cutting speed for mild steel is 25 metres per minute and the machine runs at 300 revolutions per minute. (4)
[10]

QUESTION 11: GRINDING MACHINES AND MACHINE CUTTING TOOLS

FIGURE 2 shows a grinding wheel dresser being used on a grinding wheel.

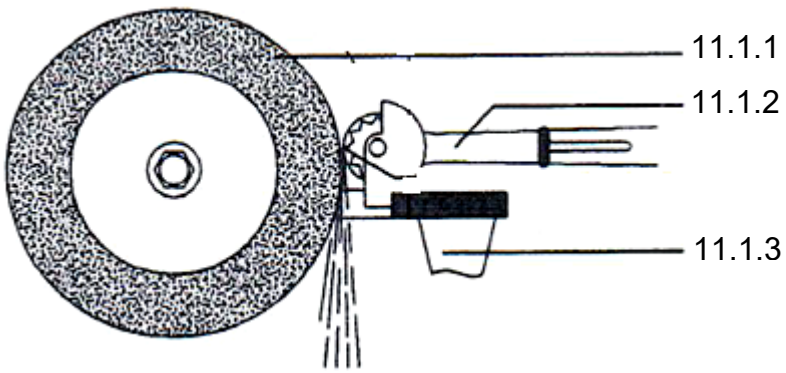

FIGURE 2

11.1 Label the parts by writing only the answer next to the question number (11.1.1–11.1.3) in the ANSWER BOOK. (3 × 1) (3)

11.2 Name the type of wheel dresser shown in FIGURE 2. (1)

11.3 Explain why the gap between the grinding wheel and tool rest eventually gets more than 3 mm. (1)

11.4 List FIVE important factors that determine the nature of a particular grinding wheel. (5)
[10]

QUESTION 12: CENTRE LATHES

12.1 FIGURE 3 shows a diagram of a computerised numerical-control lathe (CNC).

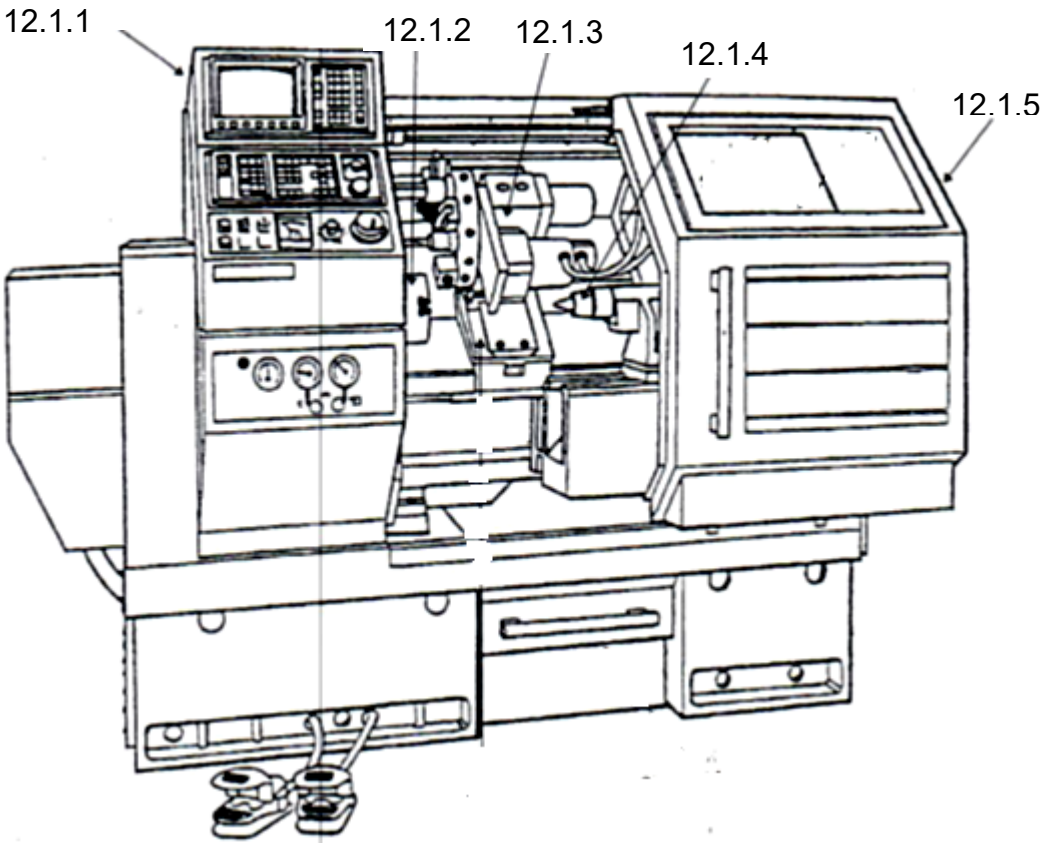

FIGURE 3

Label the parts by writing only the answer next to the question number (12.1.1–12.1.5) in the ANSWER BOOK. (5 × 1) (5)

12.2 Give FOUR advantages of the CNC-lathe when compared with the conventional centre lathe. (4)

12.3 Name ONE difference between the CNC-lathe and the conventional centre lathe. (1)
[10]

QUESTION 13: MILLING MACHINES

13.1 Explain the purpose of a milling machine. (3)

13.2 FIGURE 4 shows a diagram of a milling machine.

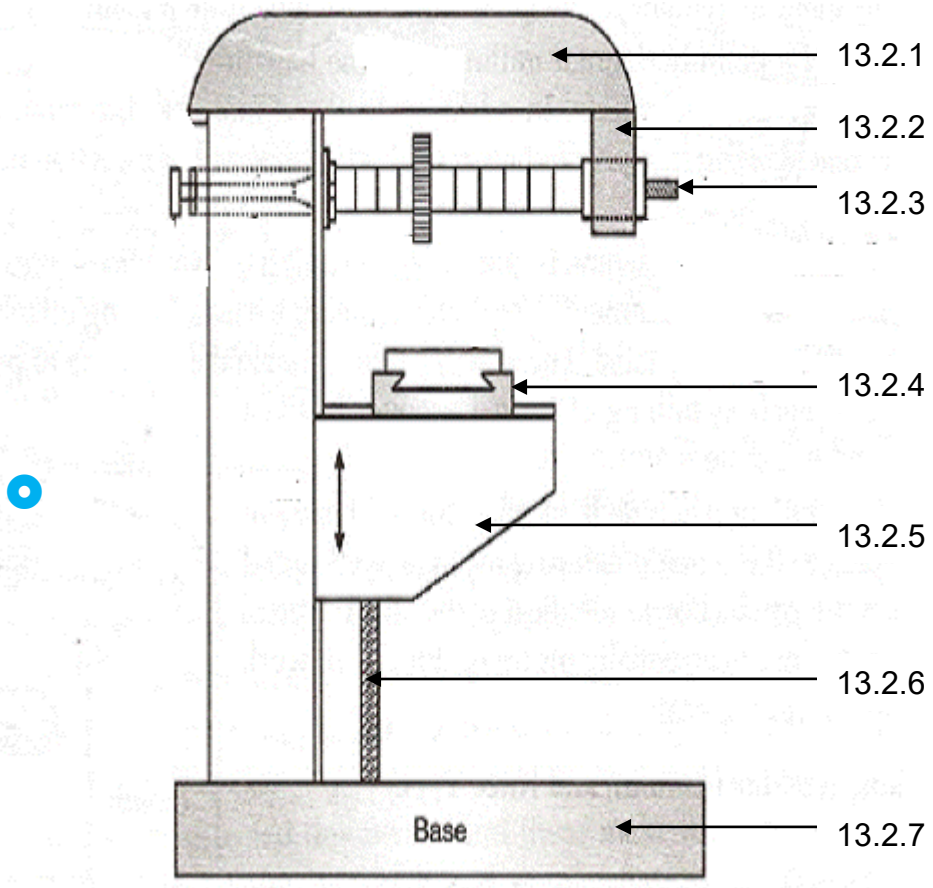

FIGURE 4

Label the parts by writing only the answer next to the question number (13.2.1–13.2.7) in the ANSWER BOOK. (7 × 1) (7)

[10]

TOTAL SECTION B: 40
GRAND TOTAL: 100

Copyright reserved

FORMULA SHEET

Any applicable formula may also be used.

1. $V = \pi \times D \times N$

2. w = feed/stroke × strokes/min × t

3. $\text{Strokes/min} = \frac{S}{\textit{Length of stroke}} \times \text{ratio}$

4. $h = \frac{D}{6}$

5. $w = \frac{D}{4}$

6. Depth (d) = 0,613 × P

7. $N = \frac{1\,000\ S}{\pi D}$

Copyright reserved