higher education & training

Department:
Higher Education and Training
REPUBLIC OF SOUTH AFRICA

T690**(E)**(A4)T

NATIONAL CERTIFICATE

FITTING AND MACHINING THEORY N1

(11021871)

4 April 2019 (X-Paper)
09:00–12:00

This question paper consists of 8 pages and 1 formula sheet.

Copyright reserved

DEPARTMENT OF HIGHER EDUCATION AND TRAINING
REPUBLIC OF SOUTH AFRICA

NATIONAL CERTIFICATE
FITTING AND MACHINING THEORY N1
TIME: 3 HOURS
MARKS: 100

NOTE: If you answer more than the required number of questions, only the required number of questions will be marked. Clearly cross out all work you do not want to be marked.

INSTRUCTIONS AND INFORMATION

1. Answer only ONE question in SECTION A.
2. Answer ALL the questions in SECTION B and SECTION C.
3. Read ALL the questions carefully.
4. Number the answers according to the numbering system used in this question paper.
5. ALL sketches must be neat, reasonably large and in good proportion.
6. Label ALL sketches.
7. Write neatly and legibly.

Copyright reserved

SECTION A

Answer only QUESTION 1.1 OR QUESTION 1.2 in this section.

QUESTION 1: OCCUPATIONAL SAFETY

1.1 Colour codes are a safety measure which is used to identify safety features in any workshop, machine shop, factory or plant.

List FIVE areas where colour codes are used. (5)

OR

1.2 Regulation 10.1.1 deals with working in harmful air.

1.2.1 What are the prescriptions regarding persons in an area that contains harmful smoke, gas, fumes or dust? (2)

1.2.2 Under which conditions may a person be allowed to enter premises which contain harmful smoke, gas, fumes or dust? (3)

[5]

TOTAL SECTION A: 5

SECTION B: GENERAL PRACTICE

Answer ALL questions in this section.

QUESTION 2: MEASURING INSTRUMENTS

2.1 Measuring instruments are precision instruments and should be treated with care.

List FIVE safety prescriptions that you would apply in the use, care and storage of measuring instruments. (5)

2.2 Inside micrometres are used to measure deep, small holes as well as the inside of bushes and bearings and the width of large slots for keyways.

If you need to show a reading of 172,03 mm on an inside micrometer, explain the following:

2.2.1 Size of extension rod to use

2.2.2 Would you use a spacer? (Yes or No)

2.2.3 What reading would you set on the micrometre head?

2.2.4 What is the standard length of the spacer that is used?

(4 × 1) (4)

2.3 List the uses of a depth micrometre. (2)

[11]

Copyright reserved

QUESTION 3: SCREW THREADS

3.1 Square screw threads are used to transmit movement or power to other components.

Name THREE applications of a square screw thread. (3)

3.2 In what instance is it suitable to use a left-hand screw thread? (1)

3.3 Calculate the depth of a M40 V-screw thread with a pitch of 4 mm. (2)
[6]

QUESTION 4: HAND TOOLS

4.1 Hammers are used for various tasks such as shaping metal, driving a chisel, riveting, and striking punches. A hammer consists of different parts.

Name the parts of a hammer. (4)

4.2 Name TWO types of hammers. (2)
[6]

QUESTION 5: METALS AND PLASTICS

5.1 There are two main groups of metals, namely ferrous and non-ferrous metals.

Explain the difference between *ferrous* and *non-ferrous* metals. (2)

5.2 Name the FOUR elements of grey cast iron as an alloy. (4)

5.3 Low carbon steel is malleable, soft and ductile.

List FOUR uses of low carbon steel. (4)

5.4 High carbon steel is tough, hard and resistant to shock.

Name TWO uses of high carbon steel. (2)
[12]

Copyright reserved

QUESTION 6: MARKING-OFF

6.1 Marking-off is an important operation for a fitter. There are specific terms that are related to marking-off.

Explain the meaning of the following terms:

6.1.1 Conical impression

6.1.2 Incline

6.1.3 Marking medium

(3 × 1) (3)

6.2 Give TWO uses of punches. (2)
[5]

QUESTION 7: KEYS AND KEYWAYS

7.1 Name TWO machines that can be used to cut internal keyways. (2)

7.2 A key must be fitted to a shaft with a diameter of 210 mm.

Calculate the thickness, width and length of the key. (4)
[6]

QUESTION 8: FASTENERS

8.1 Name TWO types of frictional lock nuts.

8.2 Name TWO types of auxiliary locking fasteners (when using bolts and nuts).

(2 × 2) **[4]**

QUESTION 9: HAND TAPS, STOCKS, DIES AND REAMERS

9.1 Taps are cutting tools that are used to cut internal threads in holes of objects such as nuts.

List the THREE taps that make up a typical tap set. (3)

9.2 Differentiate between the *solid die* and the *split die* used for external threads. (2)
[5]

TOTAL SECTION B: 55

Copyright reserved

SECTION C

Answer ALL questions in this section.

QUESTION 10: DRILLING MACHINES

10.1 Modern twist drills come from a cylindrical blank with helical grooves machined into it to form flutes.

Name ONE function of these helical grooves. (1)

10.2 FIGURE 1 below shows a pillar type drilling machine.

Label the numbered component parts. Write only the answer next to the question number (10.2.1–10.2.6) in the ANSWER BOOK.

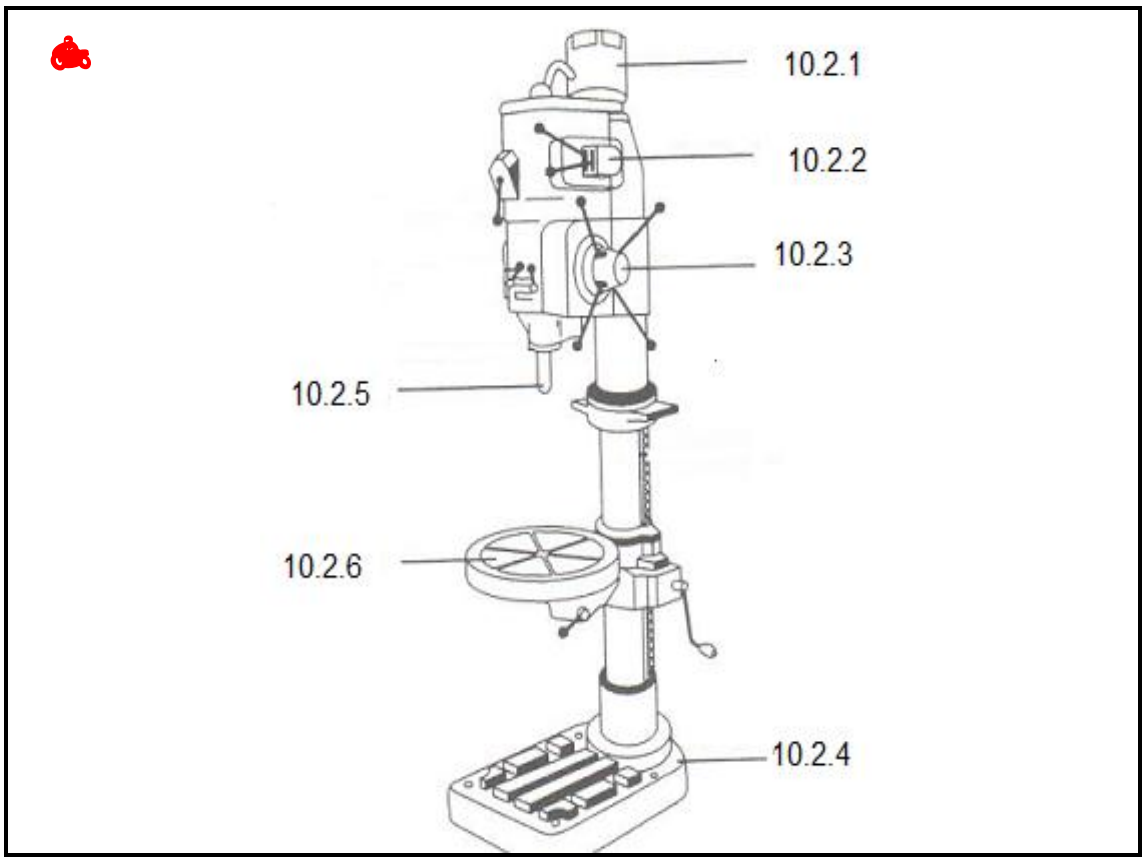

FIGURE 1 (6)

10.3 A 45 mm diameter hole must be drilled into a workpiece. The cutting speed of mild steel is 31m/min.

Calculate the speed of the drill in revolutions per minute. (3)

[10]

QUESTION 11: GRINDING MACHINES AND MACHINE CUTTING TOOLS

11.1 Explain how you would ensure that a grinding wheel is not cracked by using the ring test. (4)

11.2 A spindle end nut tightens the flanges to a grinding wheel.

Explain what can happen in the following instances:

11.2.1 Over-tightening of the spindle end nut

11.2.2 Under-tightening of the spindle end nut

(2 × 2) (4)

11.3 Grinding wheel dressers align and dress a grinding wheel.

Explain what would be achieved by dressing a blunt wheel. (2)

[10]

QUESTION 12: THE CENTRE LATHE

12.1 The lathe is one of the most versatile machines in a workshop.

Explain how the size of a lathe is determined. (2)

12.2 List THREE disadvantages of workpieces being held between centres. (3)

12.3 We distinguish between internal and external turning operations.

12.3.1 Name THREE internal turning operations that can be carried out on a lathe. (3)

12.3.2 Name TWO external turning operations that can be carried out on a lathe. (2)

[10]

Copyright reserved

QUESTION 13: THE MILLING MACHINE

13.1 The milling machine is a versatile machine that is used for machining many components.

List THREE uses of the milling machine. (3)

13.2 Study the diagram of a milling machine component in FIGURE 2 below and answer the questions.



FIGURE 2

13.2.1 Identify the component shown in FIGURE 2. (1)

13.2.2 State the functions of the component shown in FIGURE 2. (2)

13.2.3 Where on the machine is the component located and held? (1)

13.3 Why must you ensure that the work-holding device is mounted solidly on the table and is holding the workpiece firmly? (3)

[10]

TOTAL SECTION C: 40
GRAND TOTAL: 100

Copyright reserved

FITTING AND MACHINING THEORY N1

FORMULA SHEET

Any applicable formula may also be used.

1. $V = \pi \times D \times N$

2. $w = feed/stroke \times strokes/min \times t$

3. $Strokes/min = \frac{S}{Length\ of\ \ stroke} \times Ratio$

4. $h = \frac{D}{6}$

5. $w = \frac{D}{4}$

6. $Depth\ (d) = 0{,}613 \times P$

7. $L = 1{,}5\ D$

8. $N = \frac{1\,000\ S}{\pi D}$

Copyright reserved