higher education & training

Department:
Higher Education and Training
REPUBLIC OF SOUTH AFRICA

MARKING GUIDELINE

NATIONAL CERTIFICATE

FITTING AND MACHINING THEORY N1

6 APRIL 2018

This marking guideline consists of 7 pages.

Copyright reserved

SECTION A (GENERAL PRACTICE)

QUESTION 1: OCCUPATIONAL SAFETY

1.1
- Use each tool for the task it is meant for.
- Keep sharp edges of tools pointed away from you.
- Keep tools clean, dry and free of oil.
- Never carry tools with sharp edges in your pocket.
- Do not have all your tools on the workbench at once.
- Do not use tools incorrectly or carelessly.
- Take care of tools by storing and servicing them. (Any 5 × 1) **[5]**

OR

1.2 1.2.1 He/She may be incapable of taking care of himself/herself✓or of persons under his/her charge.✓ (2)

1.2.2 An intoxicated person may not be allowed to enter the workings of a mine✓ or be in the proximity of any working place or near any machinery on the surface of a mine or at the works.✓ (2)

1.2.3 An intoxicated person may be arrested immediately by the manager✓ or some person duly appointed by him/her and handed over to the police. (1)
[5]

QUESTION 2: MEASURING INSTRUMENTS

2.1 2.1.1 False
2.1.2 True
2.1.3 True

(3 × 1) (3)

2.2

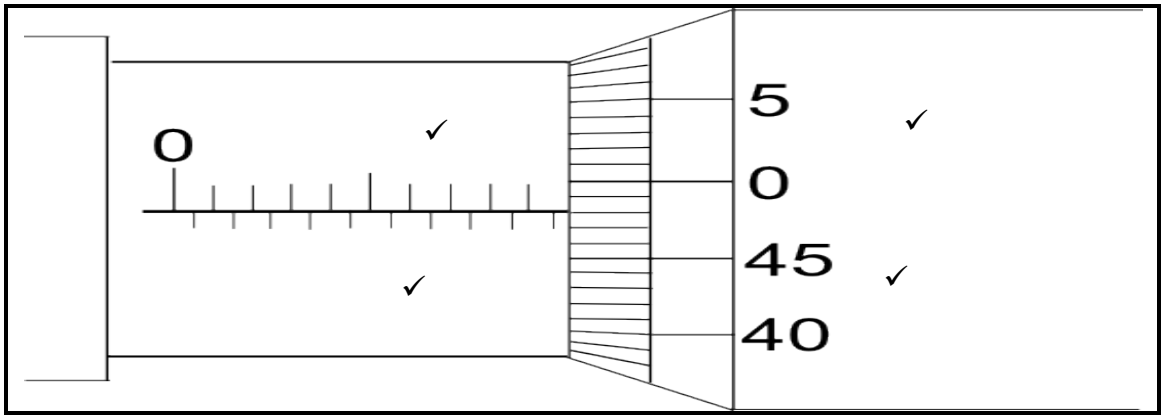

(4)

2.3
- Set up workpieces accurately in a machine.
- Set up workpieces accurately prior to marking off.
- Test rectangular workpieces for parallelism.
- Test for roundness.
- Test for concentricity.
- Test the limits of size. (Any 2 × 1) (2)

2.4 The blades are inserted over the thread✓ until the teeth fit the thread exactly.✓ (2)
[11]

QUESTION 3: SCREW THREADS

3.1 An external thread is a helical groove cut in a cylindrical rod, while an internal thread is a helical groove cut in a round hole. (1 + 1) (2)

3.2
- Where repeated fastening and loosening is required
- In soft materials such as cast iron and aluminium because there is more material between threads
- Where rapid assembly is required (Any 2 × 1) (2)

3.3 $D = 0,757 \times p$
$= 0,757 \times 2$✓
$= 1,514$ mm✓ (2)
[6]

QUESTION 4: HAND TOOLS

4.1
- Driving a chisel
- Shaping metal
- Riveting
- Gently tapping keyways
- Striking centre punches when marking off
- Driving in nails (Any 3 × 1) (3)

4.2
- Bastard file
- Second-cut file
- Smooth file (3)
[6]

QUESTION 5: METALS AND PLASTICS

5.1
- Silicon
- Phosphorus
- Sulphur
- Manganese (Any 3 × 1) (3)

Copyright reserved

5.2
- Axes
- Cold chisel and punches
- Taps, screwing dies and press-tool dies
- Piano wire (Any 3 × 1) (3)

5.3 Steel is tempered by reheating it to a suitable temperature✓ and quenching it in oil.✓ (2)

5.4
- Tin
- Lead
- Copper
- Zinc
- Antimony
- Aluminium (Any 4 × 1) (4)

[12]

QUESTION 6: MARKING OFF

6.1 6.1.1 Rule
6.1.2 Square
6.1.3 Spirit level
6.1.4 Workpiece
(4 × 1) (4)

6.2 It is used to make a conical impression on the surface of a workpiece where a hole is to be drilled. (1)

[5]

QUESTION 7: KEYS AND KEYWAYS

7.1
- Locking a pulley to the shaft of a motor
- Keying the change wheels of a lathe to their shafts
- Keying the driving flange to the spindle of a grinding wheel
- Keying a lever to a shaft
- Keying a coupling to a shaft (Any 2 × 1) (2)

7.2 t = D/6
= 80/6✓
= 13,33 mm✓

w = D/4
= 80/4✓
= 20 mm✓ (4)

[6]

QUESTION 8: FASTENERS

8.1
- Screws
- Bolts
- Nuts (3)

8.2 The tapered ends of the washer bite into the nut and the workpiece thus preventing the nut from coming loose. (1)
[4]

QUESTION 9: HAND TAPS, STOCKS, DIES AND REAMERS

9.1
- Tap extractor
- Dull cape chisel (2)

9.2
- Parallel reamer
- Taper reamer
- Expanding reamer
- Adjustable reamer (Any 3 × 1) (3)

[5]

TOTAL SECTION A: 60

SECTION B

QUESTION 10: DRILLING MACHINES

10.1
- Take off your tie and tuck in loose clothing.
- Check that all guards are in place.
- Check that the machine is operating properly.
- Check that the drills are sharpened correctly.
- Place a piece of wood under drills being removed.
- Clean metal shavings with a brush.
- Always remove the chuck key from the chuck before turning on the power. (Any 3 × 1) (3)

10.2
10.2.1 Side handle
10.2.2 Trigger switch
10.2.3 Hand grip
10.2.4 Chuck
(4 × 1) (4)

10.3 D = 15/1 000 = 0,02 m
s = 400/1 000 = 0,4 m × 60 = 24 m/min✓

$$N = \frac{s}{\pi \times 0,02}$$

$$= \frac{24}{3,142 \times 0,02} \checkmark$$

= 381,922 r/min✓ (3)
[10]

QUESTION 11: GRINDING MACHINES AND MACHINE-CUTTING TOOLS

11.1
- Huntington or star wheel dresser
- Diamond-tip dresser (2)

11.2 A ring test is used to check for cracks on the grinding wheel. (1)

11.3
11.3.1 Key
11.3.2 Paper washer
11.3.3 Grinding wheel
11.3.4 Bush
11.3.5 Paper washer
11.3.6 Outer flange
11.3.7 Shaft

(7 × 1) (7)
[10]

QUESTION 12: CENTRE LATHES

12.1
- Plain turning
- Facing
- Taper turning
- Screw cutting grinding
- Drilling
- Boring (Any 3 × 1) (3)

12.2
- The chuck could spin off and cause serious injury.
- The machine could be damaged. (2)

12.3
12.3.1 Spindle locking lever
12.3.2 Spindle
12.3.3 Barrel
12.3.4 Hand wheel
12.3.5 Adjusting screws

(5 × 1) (5)
[10]

QUESTION 13: THE MILLING MACHINE

13.1	13.1.1	Cutting slots or grooves, such as machine beds		
	13.1.2	Spiral cutting, like drill bits		
			(2 × 1)	(2)
13.2	13.2.1	Frame		
	13.2.2	Arbour		
	13.2.3	Arbour support		
	13.2.4	Column		
	13.2.5	Table		
	13.2.6	Saddle		
	13.2.7	Knee		
	13.2.8	Base		
			(8 × 1)	(8)
				[10]

TOTAL SECTION B:	**40**
GRAND TOTAL:	**100**

Copyright reserved