20130471131

higher education & training

Department:
Higher Education and Training
REPUBLIC OF SOUTH AFRICA

T660(E)(M28)T
APRIL EXAMINATION

NATIONAL CERTIFICATE

FITTING AND MACHINING THEORY N1

(11021871)

28 March 2013 (X-Paper)
09:00–12:00

This question paper consists of 9 pages and a 1-page formula sheet.

Copyright reserved

DEPARTMENT OF HIGHER EDUCATION AND TRAINING
REPUBLIC OF SOUTH AFRICA

NATIONAL CERTIFICATE
FITTING AND MACHINING THEORY N1
TIME: 3 HOURS
MARKS: 100

INSTRUCTIONS AND INFORMATION

1. Answer ALL the questions.
2. Read ALL the questions carefully.
3. Number the answers according to the numbering system used in this question paper.
4. ALL work you do not want to be marked must be clearly crossed out.
5 ALL drawings must be neat and large.
6. Write neatly and legibly.

Copyright reserved

QUESTION 1

1.1 Many accidents can be prevented when you are working in a safe environment.

Explain FIVE methods which you will apply to promote safe working conditions in a workshop. (5)

1.2 Before starting any marking-off operations, you need to study the work piece as well as the drawing and decide which side is your reference face.

Define the following terms:

1.2.1 Reference line (1)

1.2.2 Reference point (1)

1.3 Marking media must be used on the surface of a metal work piece so that the scribed lines will show up clearly on the surface.

Identify TWO marking-off fluids that can be used on cleaned machined surfaces. (2)

1.4 Some work pieces cannot be clamped in ordinary clamping devices, because of their shape.

Indicate the equipment that you will use to support a round shaft on the marking-off table. (2)

1.5 Write down the letters (A–E) in FIGURE 1 in the ANSWER BOOK and write only the name of the correct hand tool next to the letter (A–E).

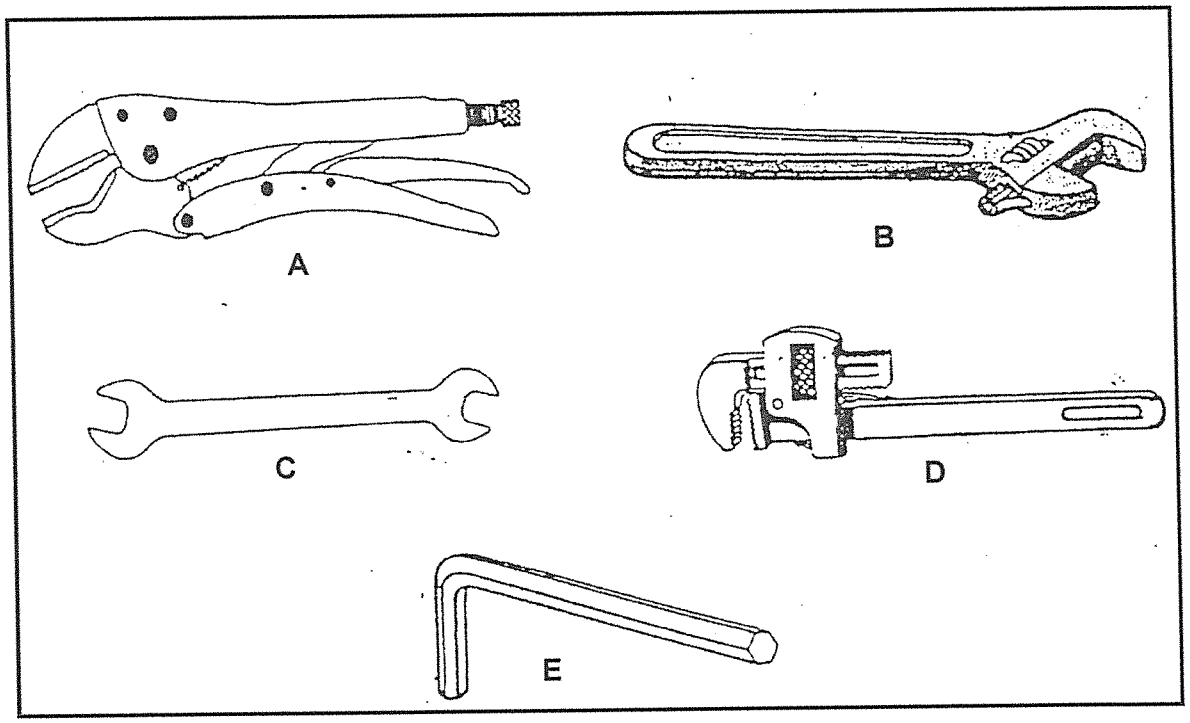

FIGURE 1

(5)
[16]

Copyright reserved

QUESTION 2

2.1 Measuring instruments like micrometers are precision instruments and should be used for their intended purpose only.

Answer the questions below by making reference to FIGURE 2.

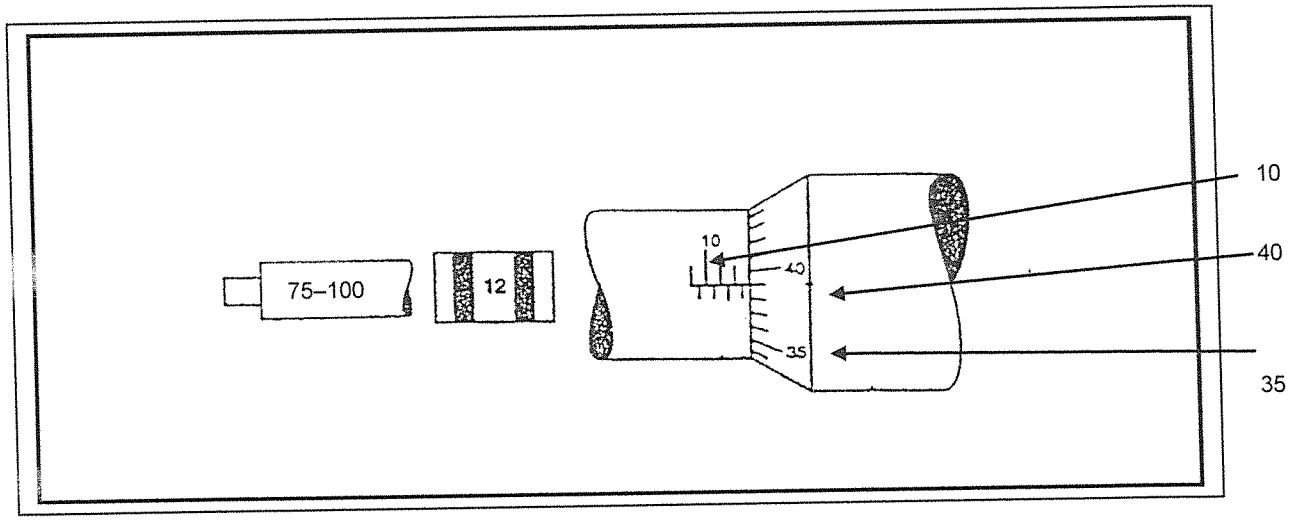

FIGURE 2

2.1.1 Write down the correct reading as seen in FIGURE 2. (1)

2.1.2 Indicate the degree of accuracy of the inside micrometer. (1)

2.1.3 How long is the main scale on the inside micrometer? (1)

2.1.4 What is the purpose of the handle supplied with the inside micrometer? (1)

2.2 Make a neat, enlarged drawing of only the reading of the following measuring instruments:

2.2.1 A metric depth micrometer : 18,24 mm (4)

2.2.2 A vernier protractor : 26°55' (3)

2.3 Choose the correct word(s) from those given in brackets. Write only the word(s) next to the question number (2.3.1–2.3.12) in the ANSWER BOOK.

2.3.1 Machine beds are manufactured from (grey cast iron/white cast iron/low carbon steel).

2.3.2 Cast steel has a (low ringing sound/dull sound/high ringing sound).

2.3.3 Annealing (hardens/softens/cool down) a metal when subjected to heat.

Copyright reserved

2.3.4 An example of a ferrous alloy is (cobalt/brass/tin).

2.3.5 Bronze is a non-ferrous alloy which is a combination of two non-ferrous elements that are (copper and zinc/copper and tin/tin and lead).

2.3.6 An example of a non-ferrous alloy is (lead/tungsten/solder).

2.3.7 We harden the surface of a work piece made from mild steel by (hardening/tempering/case hardening).

2.3.8 An example of a non-ferrous metal is (manganese/ steel/bronze/aluminium).

2.3.9 The colour code used for structural steel is (red/blue/black).

2.3.10 The colour code that is used for low-carbon steel is (orange/white/green).

2.3.11 Nylon is classified as a (metal/alloy/plastic).

2.3.12 Tufnol can be used for (gears/rivets/valves).

(12 × 1) (12)
[23]

QUESTION 3

3.1 Screw threads are used when it is necessary to assemble and dismantle components quickly and easily.

Indicate TWO applications where the following screw threads are used:

3.1.1 Square-screw thread (2)

3.1.2 Acme-screw thread (2)

3.2 Explain the difference between a left-hand and a right-hand screw thread. (2)

3.3 There are different types of keys available in industry and each having their own specific application.

Explain where the following keys will be used:

3.3.1 Rectangular key

3.3.2 Taper gib-head key

Copyright reserved

3.3.3 Feather key

3.3.4 Woodruff key

(4 × 1) (4)

3.4 Calculate the height and the width of a feather key, when a 48 mm diameter shaft must be keyed to a pulley. (2)

3.5 Write the letters (A–D) in FIGURE 3 in the ANSWER BOOK, identify and write the correct screw thread fastener next to each letter.

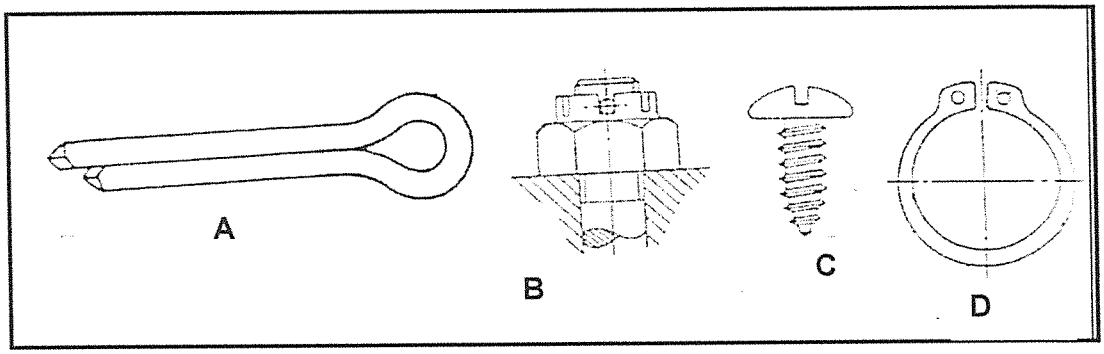

FIGURE 3 (4)

3.6 Reamers are used to shape and enlarge holes. (3)

Indicate THREE types of reamers that are used in industry.

3.7 Explain the function of stocks and dies. (1)

3.8 Taps have different shapes and sizes depending on the purpose of the tool. When would you use a plug tap? (1)

[21]

QUESTION 4

4.1 Sensitive drilling machines can drill holes up to 12 mm in diameter. Explain what is meant by the term *sensitive drilling machine.* (2)

4.2 The modern twist-drill comes from a cylindrical blank which carries two helical grooves machined into it to form the flutes. (2)

State TWO functions of helical grooves that are found on a modern twist drill.

4.3 A 15 mm diameter hole must be drilled in a piece of metal and the cutting speed is given as 600 mm/s.

Calculate the speed of the drill in revolutions per minute. (3)

Copyright reserved

4.4 There are safety precautions you should take before you start operating a centre lathe, which can perform various types of operations.

Indicate THREE types of operations that can be done on a lathe. (3)

4.5 When turning long shafts it is necessary to lend additional support to the work piece to prevent it from bending.

Identify TWO types of lathe steadies used to support work pieces on a centre lathe. (2)

4.6 The computerised numerical controlled lathe is commonly known as the CNC lathe, which is a high precision machine.

State THREE advantages of the CNC lathe when compared to a conventional centre lathe. (3)

4.7 FIGURE 4 indicates various types of centre lathe cutting tools. Write down the letters (A–E) in the ANSWER BOOK and identify the cutting tools.

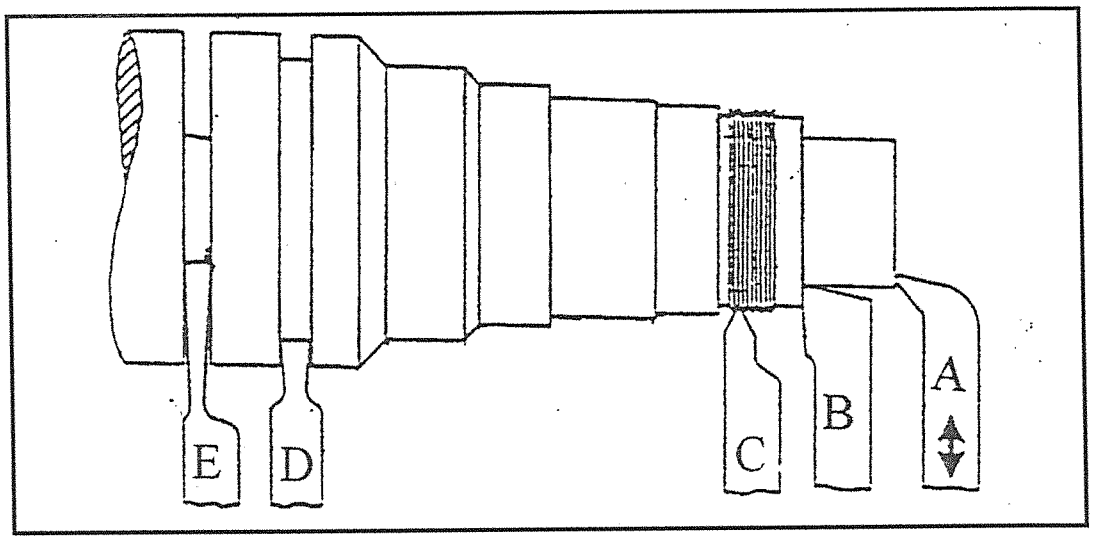

FIGURE 4

(5)
[20]

Copyright reserved

QUESTION 5

5.1 The compensating link makes the back and forth movement on a shaping machine possible.

Write the letters (A–E) in FIGURE 5 in the ANSWER BOOK and write the names of the components that make up the compensation link.

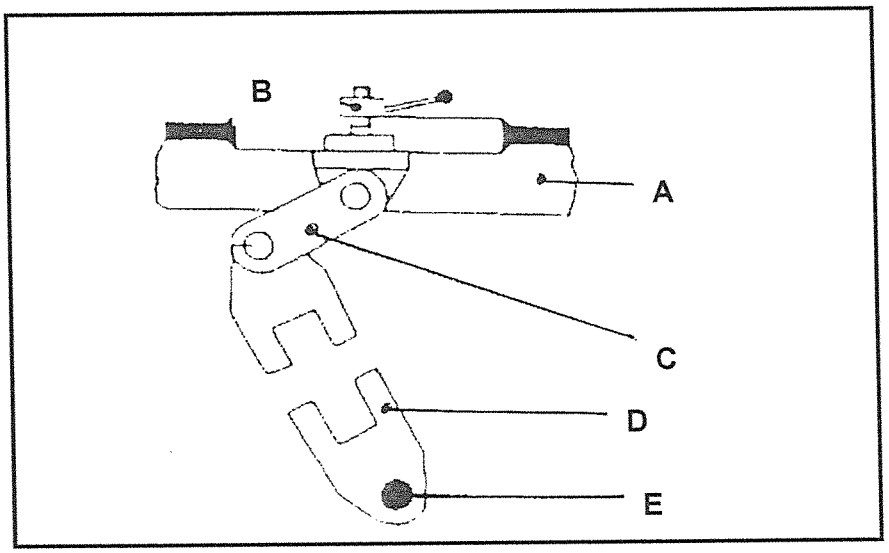

FIGURE 5 (5)

5.2 The following information was given to an apprentice to machine a cast iron block:

Length of the work piece – 225 mm
Width of the work piece – 240 mm
Cutting speed – 15 m/min
Table feed – 2 mm/stroke
Total clearance – 25 mm
Stroke ratio – 2 : 1

Calculate the total time needed for one cut across the work piece. (3)

5.3 The milling machine is a key piece of equipment in any modern workshop and it is very versatile.

Explain the function of the following components of a milling machine:

5.3.1 Overarm

5.3.2 Bracing arms

5.3.3 Table trips

5.3.4 Adjustable footstock

5.3.5 Spindle

Copyright reserved

5.3.6 Arbor

5.3.7 Arbor support

5.3.8 Column

(8 × 1) (8)

5.4 State FOUR factors that you must consider when selecting the correct type of grinding wheel to perform a specific task. (4)
[20]

TOTAL: 100

Copyright reserved

FITTING AND MACHINING THEORY N1

FORMULA SHEET

Any applicable formula may also be used.

1. $V = \pi \times D \times N$

2. $w = feed/stroke \times strokes/min \times t$
   $w = toevoer/slag \times slae/min \times t$

3. $$Strokes/min = \frac{S}{Length\ of\ stroke} \times Ratio$$

   $$Slae/min = \frac{S}{Lengte\ van\ slag} \times Verhouding$$

4. $$h = \frac{D}{6}$$

5. $$w = \frac{D}{4}$$

Copyright reserved

higher education & training

Department:
Higher Education and Training
REPUBLIC OF SOUTH AFRICA

MARKING GUIDELINE

NATIONAL CERTIFICATE

APRIL EXAMINATION

FITTING AND MACHINING THEORY N1

28 March 2013

This marking guideline consists of 8 pages.

Copyright reserved

QUESTION 1

1.1
- Advertise and propagate correct techniques by means of notice boards.
- Stress the necessity of proper lighting.
- Maintenance of cables and electrical hand tools.
- Protection of machinery.
- Workshop conditions and the prevention of accidents by keeping the floors and walkways clear.
- Proper ventilation so that workers get enough oxygen.
- Adequate working space so that workers do not get in the way of each other.

Any (5 × 1) (5)

1.2 1.2.1 Reference line – is a line from which marking-off is done. (1)

1.2.2 Reference point – is a specific point from which a construction or marking-off is done. (1)

1.3 Copper sulphate (1)
Marking blue (1)

1.4 V-blocks (2)

1.5 A ~ pipe or gas pliers (1)
B ~ adjustable spanner (1)
C ~ flat spanner (1)
D ~ stillson wrench (1)
E ~ allen key (1)
[16]

QUESTION 2

2.1 2.1.1 99,89 mm (1)

2.1.2 0,01 mm (1)

2.1.3 13 mm (1)

2.1.4 A long handle is supplied for taking measuring to the back of the deep small diameter holes. (1)

Copyright reserved

2.2 2.2.1

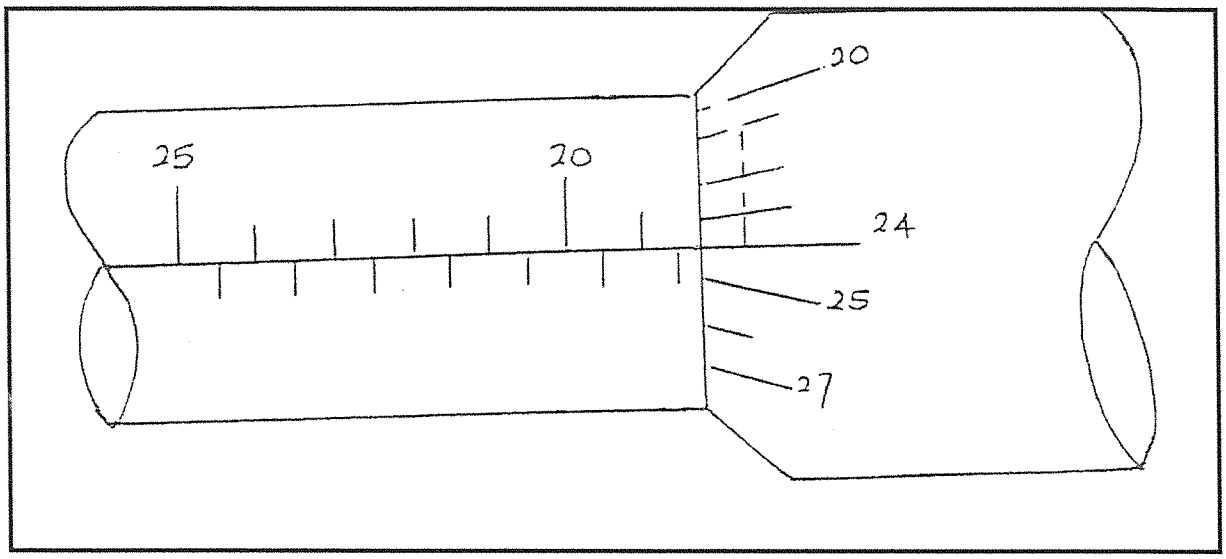

(4)

2.2.2

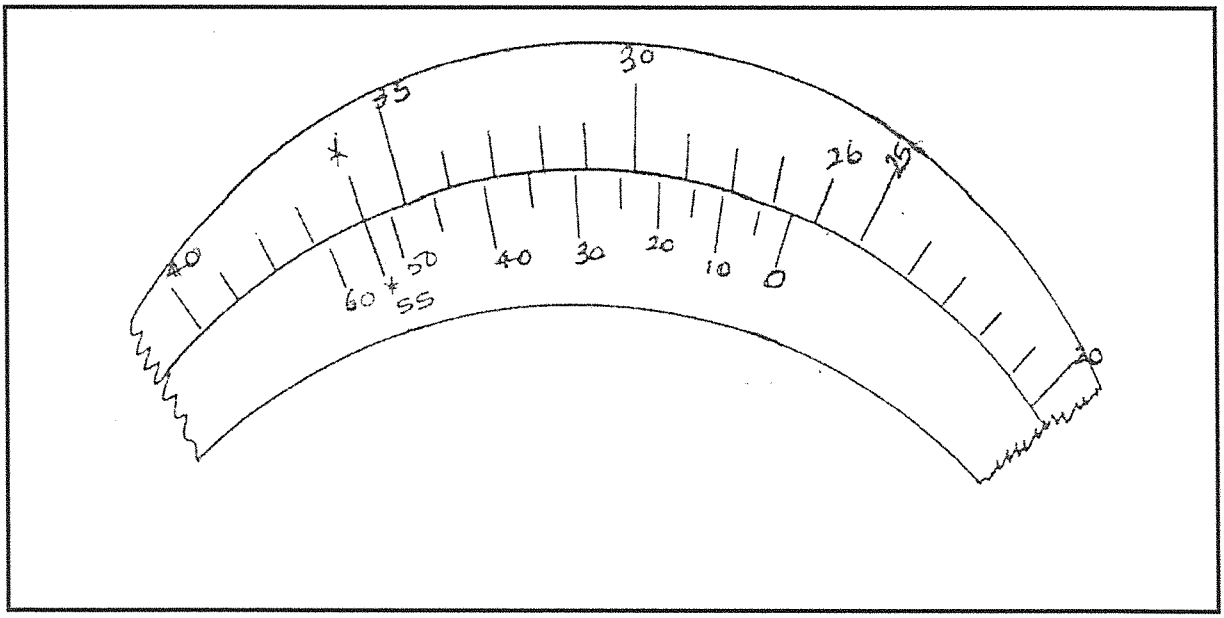

(3)

2.3 2.3.1 Grey cast iron

2.3.2 Dull sound

2.3.3 Softens

2.3.4 Cobalt

2.3.5 Copper and tin

Copyright reserved

2.3.6 Solder

2.3.7 Case hardening

2.3.8 Aluminum

2.3.9 Red

2.3.10 Orange

2.3.11 Plastic

2.3.12 Gears

(12 × 1) (12)
[23]

QUESTION 3

3.1 3.1.1
- Where quick movement of the nut is required
- Where accurate adjustment must be made
- Where strength and force are requiredAny (2 × 1)

(2)

3.1.2
- To prevent seizing and fouling due to sagging as in long lathe lead screw.
- Where it is necessary to reduce backlash.
- To engage mechanisms, for example the half nut on a lathe lead screw.

Any (2 × 1) (2)

3.2 Left-hand screw thread is cut so that the nut must be turned to the left to screw on and the right-hand screw thread is cut so that the nut must be turned to the right to screw on. (2)

3.3 3.3.1 Rectangular key
- A pulley to the shaft of a motor.
- The change wheels of a lathe to their shaft.
- The driving flange to the spindle of a grinding machine.
- A lever to a shaft.
- A coupling to a shaft.

Any (1 x 1) (1)

3.3.2 Taper gib head key
- For a driving pulley or gear keyed to a shaft.
- To key a crank disc to its driving shaft.

Any (1 x 1) (1)

Copyright reserved

3.3.3 Feather key
- The feed shaft of a lathe.
- The lifting spindle of a jack.
- A tailstock spindle, where the key prevents the spindle from turning.

Any (1 x 1) (1)

3.3.4 Woodruff key
- To locate a pulley on the end of a shaft where the pulley is secured by means of a nut. (1)

3.4 $H = \frac{D}{6} = \frac{48}{6} = 8$ mm (1)

$W = \frac{D}{4} = \frac{48}{4} = 12$mm (1)

3.5 A ~ split pin (1)
B ~ castle nut (1)
C ~ self-tapping screw (1)
D ~ external circlip (1)

3.6
- Parallel hand reamer
- Taper reamer
- Expanding reamer
- Adjustable reamer
- Machine reamer

Any (3 x 1) (3)

3.7 Used to cut external threads in a shaft or rod. (1)

3.8 When the final thread has to finish the hole. (1)
[21]

QUESTION 4

4.1 The sensitive drilling machine derives its name from the fact that it enables the operator to feel the progress of the drill as its cuts through the material. (2)

4.2
- They provide the rake angle.
- They form the cutting edge.
- They provide a passage for the coolant.
- They facilitate removal of swarf.

Any (2 x 1) (2)

Copyright reserved

4.3 D = 15 mm
S = 600 mm/sec
R.T.C N = r/min

$S = \frac{600 \times 60}{1\,000} = 36$ m/min (1)

$S = \pi DN$
$N = \frac{S}{\pi D} = \frac{36 \text{ m/min}}{\pi \times 0.015}$ (1)
$= 764$ r/min (1)

4.4
- General turning operation
- Taper turning
- Internal turning operation
- Drilling operation
- Facing
- Screw thread cutting

Any (3 × 1) (3)

4.5 Fixed steady (1)
Travelling steady (1)

4.6
- You can use a higher manufacturing speed.
- The finished part is more accurate.
- It gives a better surface finish.
- You can easily machine complex shapes.
- The CNC lathe does not require skilled operators to operate it.
- It has lower running costs.
- The life of a cutting tool is much greater due to its features such as constant surface speed and backlash compensation.

Any (3 × 1) (3)

4.7
A Side roughing tool (1)
B Knife tool (1)
C Screw cutting tool (1)
D Grooving tool (1)
E Parting tool (1)
[20]

Copyright reserved

QUESTION 5

5.1 A ~ Ram (1)
B ~ Ram locking lever (1)
C ~ Compensating link (1)
D ~ Slotted arm (1)
E ~ Fulcrum (1)

5.2 Number of strokes per minute = $\frac{\text{cutting speed (m/min) x ratio}}{\text{Length of strokes (m)}}$

$= \frac{15 \text{ m/stroke}}{0{,}25 \text{ m}} \times \frac{2}{3}$

$= 60 \times 0{,}667$

$= 40$ strokes/min (1)

Time = $\frac{\text{width of work piece (mm)}}{\text{Feed/stroke} \times \text{strokes per min}}$

$= \frac{240}{2 \text{ mm/min} \times 40}$ (1)

$= 3$ min (1)

5.3 5.3.1 The overarm provides support and the correct alignment for the arbor and you can adjust and clamp it in any position.

5.3.2 Bracing arms are fitted to the overarm and knee of the machine, to provide better support to the arbor and prevent vibration and chatter when you make heavy cuts.

5.3.3 The table trips trip the automatic feed at pre-set positions.

5.3.4 The adjustable footstock supports the work piece on the opposite side of the dividing head and you can adjust it in the vertical plane for taper work.

5.3.5 The spindle is hollow and provides the drive to the arbour and cutters.

5.3.6 The arbour is located and held by the taper in the spindle nose; the arbour drives and holds the cutters in their correct position.

5.3.7 The arbour support fits and clamps to the overarm in any position along its length to align and support the arbour.

5.3.8 The column is a precision-machined section which supports and guides the knee vertically.

(8×1) (8)

Copyright reserved

5.4
- The material you have to grind and its hardness.
- The amount of material you must remove and the finish you require.
- Whether you have to do wet or dry grinding.
- The wheel speed.
- The area of grinding contact.
- The severity of the grinding operation.

Any (4 x 1) (4)
[20]

TOTAL: 100

Copyright reserved