higher education & training

Department:
Higher Education and Training
REPUBLIC OF SOUTH AFRICA

T640(E)(A16)T
APRIL EXAMINATION

NATIONAL CERTIFICATE

FITTING AND MACHINING THEORY N1

(11021871)

16 April 2015 (Y-Paper)
13:00–16:00

This question paper consists of 8 pages and 1 formula sheet.

ENGINEERING

Copyright reserved

DEPARTMENT OF HIGHER EDUCATION AND TRAINING
REPUBLIC OF SOUTH AFRICA

NATIONAL CERTIFICATE
FITTING AND MACHINING THEORY N1
TIME: 3 HOURS
MARKS: 100

NOTE: If you answer more than the required number of questions, only the required number of questions will be marked. All work you do not want to be marked must be clearly crossed out.

INSTRUCTIONS AND INFORMATION

1. ALL the questions in SECTION A must be answered, except QUESTION 1 where either QUESTION 1.1 or QUESTION 1.2 must be answered.
2. Answer ALL FOUR questions from SECTION B.
3. Read ALL the questions carefully.
4. Number the answers according to the numbering system used in this question paper.
5. All the sketches must be neat, fully labelled, reasonably large and in good proportion.
6. Write neatly and legibly.

ENGINEERING

Copyright reserved

SECTION A: GENERAL PRACTICE

Answer ALL the questions in this section, except QUESTION 1, where either QUESTION 1.1 or QUESTION 1.2 must be answered.

QUESTION 1: OCCUPATIONAL SAFETY

1.1 Colour codes are a safety measure which is used to identify pipelines that carry different contents.

State the content in the pipelines which have the following colours.

1.1.1 Golden brown

1.1.2 Bright green

1.1.3 Silver or aluminium

1.1.4 Arctic blue

1.1.5 Jacaranda

(5 x 1) (5)

OR

1.2 1.2.1 Regulation 10.2.4 discusses the use of compressed air.

Indicate THREE instances where compressed air shall not be used. (3)

1.2.2 Name TWO important surface-protection devices to be used when working in a dangerous mining area. (2)

[5]

QUESTION 2: MEASURING INSTRUMENTS

2.1 Indicate by means of an enlarged drawing, the reading 65,28 mm on an inside micrometer. A 12 mm distance piece is available as well as one of the following accessories:

50–75 mm
75–100 mm
100–125 mm
125–150 mm
150–175 mm
175–200 mm

Note: Barrel scale: 13 mm only (5)

ENGINEERING

2.2 Label the components of the micrometer as shown in FIGURE 1 by writing only the answers next to the letters (A–E) in the ANSWER BOOK.

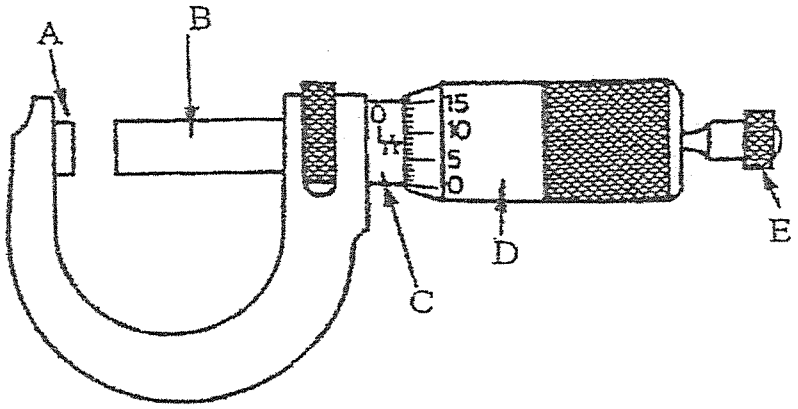

FIGURE 1 (5)

2.3 A feeler gauge is an important instrument used in industry.

State the practical use of a feeler gauge. (1)
[11]

QUESTION 3: SCREW THREADS

3.1 Explain the difference between *external* and *internal threads*. (2)

3.2 Make a neat drawing of the following screw-thread profiles:

3.2.1 Square thread

3.2.2 Acme thread

Also show the pitch, depth and included angle for each.

(2 x 2) (4)
[6]

QUESTION 4: HAND TOOLS

4.1 Hammers are designed and used for various tasks.

Explain TWO uses of the ball-peen hammer. (1)

4.2 Punches are used for a wide range of work.

State THREE types of punches used in industry. (3)

4.3 Explain by means of a drawing why the set of a hacksaw blade is so important. (2)
[6]

ENGINEERING

QUESTION 5: METALS AND PLASTICS

5.1 To perform various functions in industry, steel undergoes various heat treatment processes.

Describe the purpose of each of the following heat-treatment processes that are performed on steel:

5.1.1 Hardening

5.1.2 Annealing

5.1.3 Normalising

5.1.4 Tempering

5.1.5 Case-hardening

(5 x 1) (5)

5.2 Non-ferrous alloy is a combination of two or more non-ferrous elements.

State the composition and ONE use for each of the following non-ferrous alloys used in industry:

5.2.1 Brass

5.2.2 Bronze

(2 x 2) (4)

5.3 Plastics are described as a group of non-metallic materials.

Identify TWO types of plastics commonly used in industry. (2)

5.4 As an employee in the workshop why is colour-coding of metals important to you? (1)

[12]

QUESTION 6: MARKING OFF

6.1 Name FOUR main components of a combination set. (4)

6.2 For what purpose are V-blocks used during a marking-off operation? (1)

[5]

QUESTION 7: KEYS AND KEYWAYS

7.1 Name FOUR types of keys used in practice to prevent rotation between mating machine parts. (4)

7.2 Calculate the height and the width of a feather key if a 30 mm diameter shaft must be keyed to a pulley. (2)

[6]

Copyright reserved

ENGINEERING

QUESTION 8: FASTENERS

Indicate whether the following statements are TRUE or FALSE. Choose the answer and write only 'true' or 'false' next to the question number (8.1–8.4) in the ANSWER BOOK.

8.1 Allen screws are self-tapping screws.

8.2 We use drive screws to connect drives between two machines.

8.3 The nylon nut is a positive locking nut.

8.4 Flat washers spread the tightening load of a nut over a larger area.

(4 x 1) (4)
[4]

QUESTION 9: HAND TAPS, STOCKS, DIES AND REAMERS

9.1 Taps are used to cut an internal thread in a hole.

Explain TWO methods that can be used to remove a broken tap from a hole. (2)

9.2 Explain the function of a reamer when used in a workshop. (1)

9.3 Explain the function of stocks and dies. (1)

9.4 State ONE type of die used in industry. (1)
[5]

TOTAL SECTION A: 60

SECTION B: MACHINE CUTTING TOOLS AND MACHINES

NOTE: Answer ALL FOUR questions from this section.

QUESTION 10: DRILLING MACHINES

10.1 Name THREE general drilling machines used in industry. (3)

10.2 Explain with the aid of a drawing what is meant by counter boring.

The drill profile and the workpiece must be shown. (3)

10.3 Give ONE reason why the drilling point of a drill bit is ground to an obtuse point when thin plate is drilled. (1)

10.4 A 15 mm diameter hole must be drilled in a piece of aluminium. The cutting speed is given as 60 m/min.

Calculate the speed of the drill in revolutions per minutes (r.p.m.). (3)
[10]

Copyright reserved

QUESTION 11: GRINDING MACHINES AND MACHINE CUTTING TOOLS

11.1 State FIVE factors to be considered before selecting a grinding wheel for a specific job. (5)

11.2 Name the centre-lathe cutting tool that is used to cut off the completed workpiece. (1)

11.3 Explain the difference between a positive rake angle and a negative rake angle. (2)

11.4 In industry, boring bars are used on certain machines.

Explain by means of a freehand drawing the purpose of a boring bar. (1)

11.5 What is the function of a chip breaker? (1)
[10]

QUESTION 12: CENTRE LATHE

12.1 Name TWO taper turning methods used in practice. (2)

12.2 State THREE advantages of using a three-jaw self-centring chuck on the centre lathe. (3)

12.3 Before cutting a screw thread on a lathe with a 60° toolbit, certain prerequisites need to be taken into account.

State THREE of these prerequisites. (3)

12.4 State TWO disadvantages of the CNC lathe when compared to the conventional lathe. (2)
[10]

ENGINEERING

QUESTION 13: MILLING MACHINE

13.1 State THREE distinguishing factors between the plain and the universal milling machine. (3)

13.2 Name TWO uses of a milling machine. (2)

13.3 Describe the functions of the following components on a milling machine.

13.3.1 Machine vice

13.3.2 Dividing head

13.3.3 Arbor

13.3.4 Adjustable tailstock

13.3.5 Ripping cutter

(5 x 1) (5)
[10]

TOTAL SECTION B 40
GRAND TOTAL 100

ENGINEERING

Copyright reserved

FITTING AND MACHINING THEORY N1

FORMULA SHEET

Any applicable formula may also be used.

1. $V = \pi \times D \times N$

2. $w = feed/stroke \times strokes/min \times t$
   $w = toevoer/slag \times slae/min \times t$

3. $$Strokes/min = \frac{S}{Length\ of\ stroke} \times Ratio$$

   $$Slae/min = \frac{S}{Lengte\ van\ slag} \times Verhouding$$

4. $$h = \frac{D}{6}$$

5. $$w = \frac{D}{4}$$

ENGINEERING

Copyright reserved

higher education & training

Department:
Higher Education and Training
REPUBLIC OF SOUTH AFRICA

MARKING GUIDELINE

NATIONAL CERTIFICATE

APRIL EXAMINATION

FITTING AND MACHINING THEORY N1

16 APRIL 2015

This marking guideline consists of 9 pages.

Copyright reserved

QUESTION 1: OCCUPATIONAL SAFETY

1.1 1.1.1 Golden brown – oils (1)

1.1.2 Bright green – water
Silver or Aluminium – steam
Artic Blue – air
Jacaranda – acids (4 x 1) (4)
[5]

OR

1.2 1.2.1
- Dissemination of a harmful amount of dust.
- Injury to any person.
- To clean the body of a person or clothes worn by him (3)

1.2.2
- Life-line
- Hard hat (2)
[5]

QUESTION 2: MEASURING INSTRUMENTS

2.1

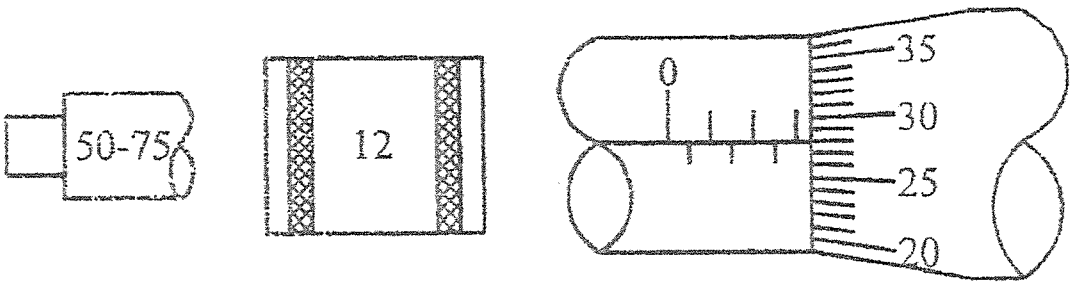

Reading = 50 + 12 + 3 + 0,28 = 65,28 mm (5)

2.2 A - Anvil
B - Spindle
C - Sleeve
D - Thimble
E - Ratchet (5 x 1) (5)

2.3 Feeler gauge is used to measure a small gap between components
Spark-plug gap (1)
[11]

Copyright reserved

QUESTION 3: SCREW THREADS

3.1 Internal thread is a thread on the inside of a part.
Example: Nut
External thread is a thread on the outside of a part.
Example: Machine bolt (2)

3.2 3.2.1

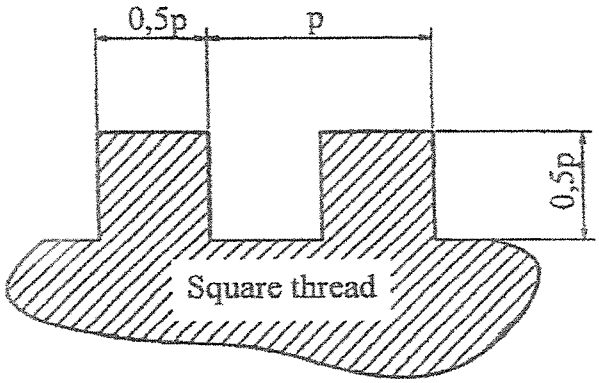

SQUARE THREAD (2)

3.2.2

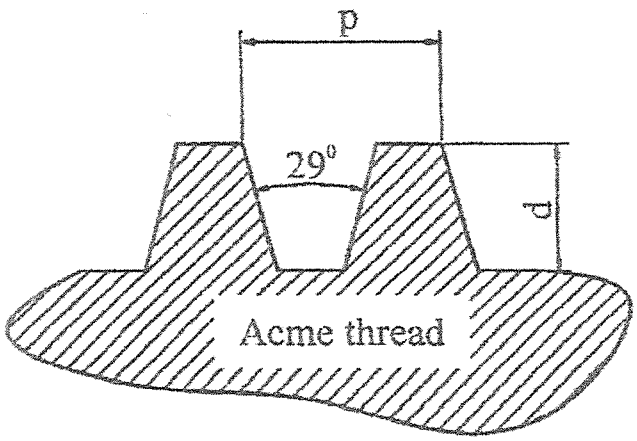

ACME THREAD (2)
[6]

QUESTION 4 HAND TOOLS

4.1 Ball-pein hammer: Face is used for general hammering
Pein is used for riveting, shaping and formwork (1)

4.2 Types of punches – Dotting punch
Centre punch
Pin punch
Hollow punch
Aligning punch
Bell punch (Any 3 x 1) (3)

4.3 The teeth are staggered from left to right which provided a wider groove. That wider groove ensures that the blade will not stick in the groove.

There's clearance for the blade. (2)
[6]

QUESTION 5: METALS AND PLASTICS

5.1 5.1.1 Hardening – Preheat steel and then quenched rapidly in oil. Results in hardened steel that resists wear or it can be used to cut other metals.

5.1.2 Annealing – Steel is heated slowly to a certain temperature and allowed to cool slowly. This releases internal stresses, refine the grain structure and reduces brittleness.

5.1.3 Normalising – Steel is heated slowly and then allowed to cool in air. Process refines the structure. Removes strains and stresses.

5.1.4 Tempering: Steel is heated in its hardened state and then quenched rapidly in oil or water. Process removes stresses and strains induced by hardening, reduces brittleness and increases toughness.

5.1.5 Case-hardening – During the proses carbon penetrates the outer skin of the low carbon steel. This surface presents a good wearing surface. (5 x 1) (5)

Copyright reserved

5.2 5.2.1 Brass: Composition: Copper and zinc – Used for bolts and nuts
– Electric wire
– Pipes
(2 x 1) (2)

5.2.2 Bronze : Composition : Copper and Tin – Used for bearings
– Valves
– Impellers
(2 x 1) (2)

5.3 Tufnol
Nylon (2)

5.4 To identify the various types of metals (1)
[12]

QUESTION 6: MARKING-OFF

6.1
- Ruler
- Square
- Protractor
- Centre head

(4 x 1) (4)

6.2 V-blocks are used to support round workpieces on the marking-off table (1)
[5]

QUESTION 7: KEYS AND KEYWAYS

7.1 Rectangular key
Gib-head taper key
Feather key
Woodruff key
(4 x 1) (4)

7.2 R.T.C. H and W
D = 30 mm

$$H = \frac{D}{6} = \frac{30}{6} = 5 \text{ mm}$$ (1)

$$W = \frac{D}{4} = \frac{30}{4} = 7{,}5 \text{ mm}$$ (1)
[6]

Copyright reserved

QUESTION 8: FASTENERS

8.1 False
8.2 False
8.3 False
8.4 True

(4 x 1) (4)
[4]

QUESTION 9: HAND TAPS, STOCKS, DIES AND REAMERS

9.1 9.1.1 Tap extractor – this tool fits into the flutes of a tap, pushes against the thread of the surrounding material and forces the tap out.

9.1.2 Dull cap chisels – place the chisel in a flute of the tap against the side of the cutting edge and strike the chisel lightly with a hammer.

9.1.3 Penetrating oil – this oil flows between the surrounding materials and the tap creates a small clearance between components.

9.1.4 Nitric acid – the acid will eat the steel and loosen up the tap.

(Any 2 x 1) (2)

9.2 The function of the reamer is to smooth the inside surface of drilled holes or to shape and enlarge holes. (1)

9.3 Dies are used to cut external threads on a shaft. (1)

9.4 State one type of die:– Circular-split die
– Two-piece rectangular die
– Solid die (1)
[5]

TOTAL SECTION A: 60

Copyright reserved

SECTION B: MACHINE CUTTING TOOLS AND MACHINES

ANSWER ALL FOUR QUESTIONS FROM THIS SECTION

QUESTION 10

10.1 Pedestal drilling machine
Pillar drilling machine
Radial drilling machine
Portable electrical hand drill

(Any 3 x 1) (3)

10.2

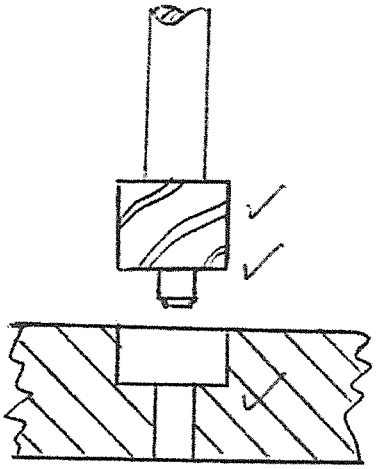

(3)

10.3 Large drill bits will grab the plate and rip it loose from the clamps or vice and rotate the plate with the drill bit. (1)

10.4 $$N = \frac{1\,000 \times 60}{\prod .15} = 1\,273{,}24\ r.p.m.$$ (3)

[10]

QUESTION 11: GRINDING MACHINES AND MACHINE CUTTING TOOLS

11.1
- Kinds of abrasive mediums
- Grain size
- Bonding material
- Grade
- Structure

(5)

11.2 Parting-off tool (1)

11.3 Positive rake is when the wedge angle is less than 90°.
Negative is when the edge is strong and the wedge angle is bigger than 90°. (2)

11.4 Is a lathe tool used to enlarge the size of holes

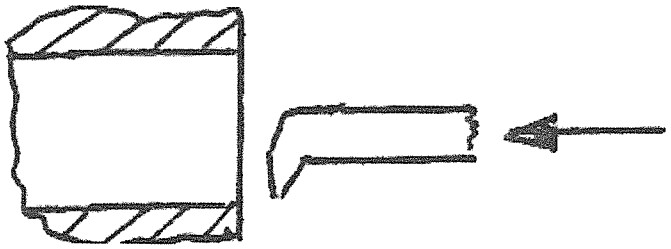

(1)

11.5 Chip breaker acts as an obstruction to smooth the flow of the chip.
It causes the chip to break into short manageable chips. (1)
[10]

QUESTION 12: CENTRE LATHE

12.1
- Set-over of compound slide
- Set-over of the tail stock

(2)

12.2 Ease of work setting
- Wide range of cylindrical and hexagonal workpieces can be held
- Internal and external jaws are available
- Work can be readily performed on the end face of a job
- Work can be bored (Any 3 x 1) (3)

12.3
- Tool bit to be at centre height
- Tool bit 90° set to workpiece
- Machine set at correct pitch
- Compound slide at correct setting (Any 3 x 1) (3)

12.4
- Highly-skilled labour needed
- Complex shapes take a long time to manufacture

(2)
[10]

Copyright reserved

QUESTION 13: MILLING MACHINE

13.1 Plain milling machine

- Table can be moved in three straight lines
- Longitudinal, cross and vertical manually or by power
- It can not cut helical gears

Universal milling machine

- Table has the same movements as the plain milling machine
- In addition, the table can be swivelled at an angle to the column face.
- It can cut helical gears (Any 3 x 1) (3)

13.2 Production of multi-faceted, mainly flat workpieces, eg. cut gears, splines, hexagon shapes, octagonal objects. (2)

13.3 13.3.1 The machine vice is an attachment to the milling machine. It is bolted to the bed of the milling machine to hold a workpiece for cutting flats and grooves

13.3.2 Dividing head is also an attachment to the milling machine. Also bolted to the bed for cutting gears

13.3.3 Is the shaft on which all cutters are supported for horizontal milling. A key is provided with a keyway and it provides the drive.

13.3.4 To support the work at the other end when placed in the dividing head

13.3.5 The ripper is put in a collet in the spindle for roughing out purposes.

(5 x 1) (5)
[10]

TOTAL SECTION B: 40
GRAND TOTAL: 100

Copyright reserved