higher education & training

Department:
Higher Education and Training
REPUBLIC OF SOUTH AFRICA

T620(E)(N11)T

NOVEMBER EXAMINATION

NATIONAL CERTIFICATE

FITTING AND MACHINING THEORY N1

(11021871)

11 November 2014 (Y-Paper)
13:00–16:00

This question paper consists of 10 pages and 1 formula sheet.

ENGINEERING

Copyright reserved

DEPARTMENT OF HIGHER EDUCATION AND TRAINING
REPUBLIC OF SOUTH AFRICA

NATIONAL CERTIFICATE
FITTING AND MACHINING THEORY N1
TIME: 3 HOURS
MARKS: 100

NOTE: If you answer more than the required number of questions only the required number of questions will be marked. All work you do not want to be marked must be clearly crossed out.

INSTRUCTIONS AND INFORMATION

1. ALL the questions in SECTION A must be answered, except QUESTION 1 where either QUESTION 1.1 or QUESTION 1.2 must be answered.
2. Answer any FOUR questions from SECTION B.
3. Read ALL the questions carefully.
4. Number the answers according to the numbering system used in this question paper.
5. ALL the sketches must be neat, reasonably large and in good proportion.
6. ALL sketches must be labelled.
7. Write neatly and legibly.

ENGINEERING

Copyright reserved

SECTION A (GENERAL PRACTICE)

ALL the questions in this section must be answered, except QUESTION 1, where either QUESTION 1.1 or QUESTION 1.2 must be answered.

QUESTION 1: OCCUPATIONAL SAFETY

1.1 1.1.1 Name THREE methods which you will apply to promote safe working conditions in a workshop. (3)

1.1.2 State TWO reasons for wearing gloves in a machine workshop. (2)
[5]

OR

1.2 Briefly answer the following questions as applicable to Regulation 4.4.1 in connection with supplying a complaint book as described in the Minerals Act No. 50 of 1991.

1.2.1 Where must the complaint book be kept? (1)

1.2.2 What kinds of complaints are entered into the complaints book? (2)

1.2.3 Who must inspect this book and how often? (2)
[5]

QUESTION 2: MEASURING INSTRUMENTS

2.1 FIGURE 1 indicates a reading as seen on a metric inside micrometer.

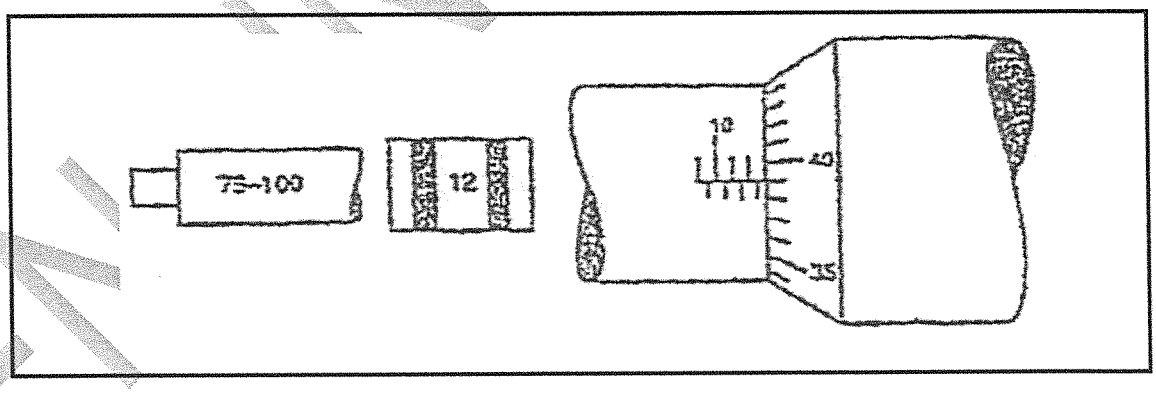

FIGURE 1

2.1.1 Write the correct reading as seen in FIGURE 1.

2.1.2 Name the degree of accuracy of the measuring instrument in FIGURE 1.

2.1.3 How long is the main scale on the inside micrometer?

2.1.4 What is the purpose of the handle supplied with the inside micrometer?

(4 × 1) (4)

ENGINEERING

2.2 Make a neat enlarged drawing of only the reading of the following measuring instruments:

2.2.1 A metric depth micrometer 18,24 mm (4)

2.2.2 A vernier protractor 26°55' (3)
[11]

QUESTION 3: SCREW TREADS

Make a neat drawing and also indicate the included angle of the following screw thread profiles:

3.1 V-screw thread

3.2 Square screw thread

3.3 Acme screw thread

(3 × 2) **[6]**

QUESTION 4: HAND TOOLS

State the use of each of the following hand tools as used in industry:

4.1 Soft-faced hammer

4.2 Second-cut file

4.3 Flat chisel

4.4 Centre punch

4.5 General purpose pliers

4.6 Chain tongs

(6 × 1) **[6]**

ENGINEERING

Copyright reserved

QUESTION 5: METALS AND PLASTIC

5.1 Name TWO types of cast iron and state where they are used. (4)

5.2 Explain the difference between *hardening* and *case hardening.* (2)

5.3 Name the composition, ONE property and ONE use of the following non-ferrous alloys:

5.3.1 Brass

5.3.2 Bronze

(2 × 3) (6)
[12]

QUESTION 6: MARKING OFF

Write only the name of the correct marking-off tools (FIGURE 2) next to the letters (A–E) in the ANSWER BOOK.

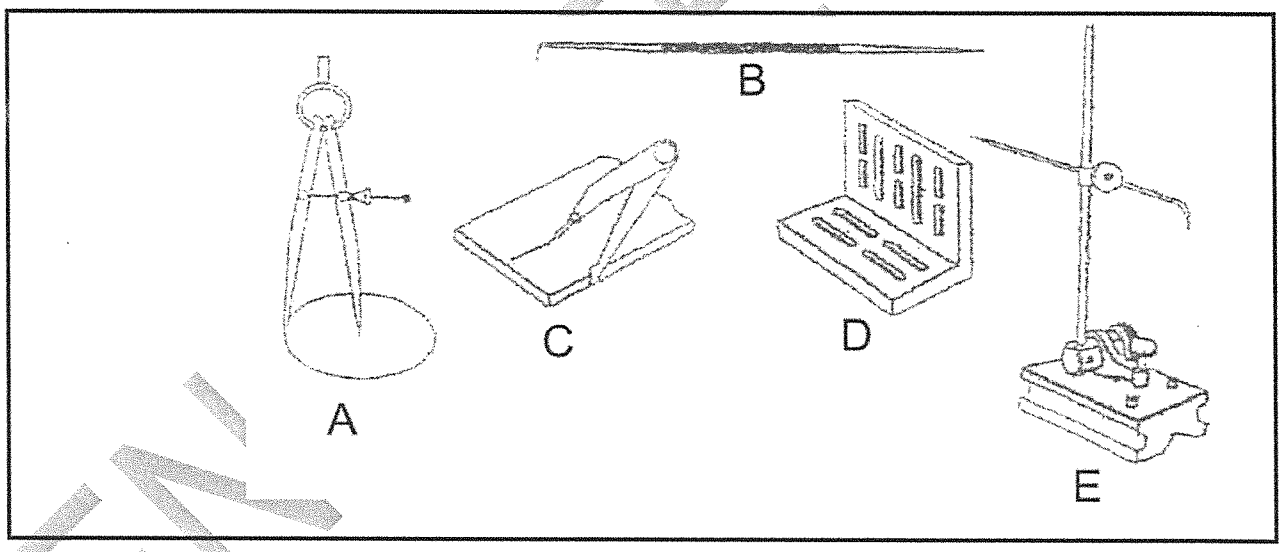

FIGURE 2 **[5]**

QUESTION 7: KEYS AND KEYWAYS

7.1 State TWO different machining processes applied to obtain keyways on shafts and in holes. (2)

7.2 State ONE use of a feather key. (1)

7.3 Calculate the height, width and the length of a key to be fitted to a shaft with a diameter of 45 mm. (3)
[6]

Copyright reserved

QUESTION 8: FASTENERS

Explain the use of each of the following fastening devices in industry:

8.1 Locking wire

8.2 Alien screws

8.3 Drive screws

8.4 Cir-clips

(4 × 1) **[4]**

QUESTION 9: HAND TAPS, DIES AND REAMERS

9.1 State TWO thread-cutting faults with taps and explain how you would rectify these faults. (4)

9.2 How can one distinguish between a left-hand tap and a right-hand tap? (1)

[5]

TOTAL SECTION A: 60

ENGINEERING

Copyright reserved

SECTION B (MACHINE CUTTING TOOLS AND MACHINES)

Answer any FOUR questions from this section.

QUESTION 10: DRILLING MACHINES

10.1 State THREE reasons for using cutting fluids on a drilling machine when drilling holes. (3)

10.2 The cutting speed for mild steel is 30 meters per minute and the spindle speed was 800 rpm.

Calculate the diameter of the drill that was being used to drill the hole. (3)

10.3 Indicate whether the following statements are TRUE or FALSE. Choose the answer and write only 'true' or 'false' next to the question number (10.3.1–10.3.4) in the ANSWER BOOK.

10.3.1 The process that makes provision for a 60 degree screw head to be flushed with the surface of a work piece is known as counter boring.

10.3.2 The feed of the drill on a sensitive drilling machine is transferred by means of a plain lever on which a pinion is fitted and meshed in with a rack.

10.3.3 To remove a straight shank drill from a drilling machine spindle a taper drill drift is used.

10.3.4 Drill bits up to 50 mm in diameter may be used on a column drilling machine.

(4 × 1) (4)

[10]

ENGINEERING

QUESTION 11: GRINDING MACHINES AND MACHINE CUTTING TOOLS

11.1 Explain what is meant by positive rake and negative rake when working with cutting tools. (2)

11.2 Describe the term *chip breaking* as applicable to machine cutting tools. (2)

11.3 Write only the name of the components (FIGURE 3) next to the letters (A–F) in the ANSWER BOOK.

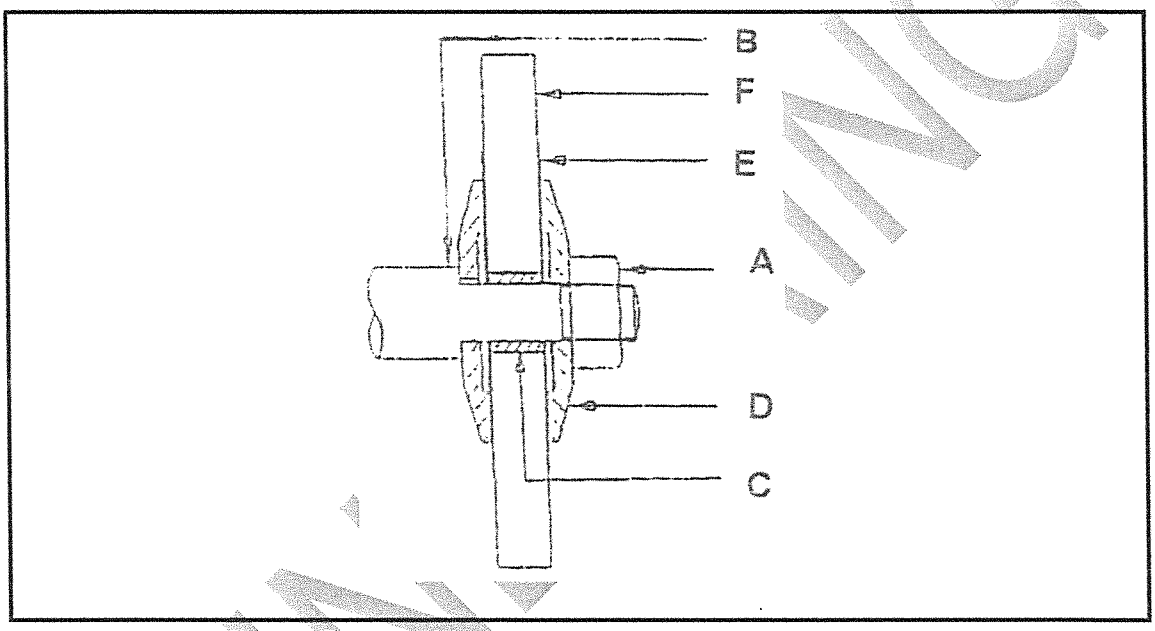

FIGURE 3 (6)

[10]

QUESTION 12: GENERAL

Indicate whether the following statements are TRUE or FALSE. Choose the answer and write only 'true' or 'false' next to the question number (12.1–12.10) in the ANSWER BOOK.

12.1 The shaping machine can easily be replaced by a milling machine.

12.2 The days of the conventional lathe is over, it will be totally replaced by the CNC lathe.

12.3 We use a screw thread pitch gauge to set up a screw cutting tool, 90° to the work piece.

12.4 Internal-diameter cutting on a lathe is done with a boring bar.

12.5 A fixed steady is bolted against the tail-stock.

ENGINEERING

12.6 A 3–jaw-chuck's running speed is faster than a 4–jaw-chuck.

12.7 If you are strong enough, you can hold a thin piece of plate by hand for drilling work.

12.8 A Huntington dresser is being used to cut the front surface of the grinding wheel straight again.

12.9 If the gap between grinding wheel and work rest is more than 3 mm, it means that the grinding wheel is worn out.

12.10 The speed with a hacksaw is ±120 strokes per minute.

(10 × 1) **[10]**

QUESTION 13: CENTRE LATHE

13.1 The centre lathe can be used to perform various types of operations.

Name THREE of these operations. (3)

13.2 Name THREE advantages of using an independent four-jaw chuck on the centre lathe. (3)

13.3 Give TWO reasons why preference is sometimes given to a rotating/running centre instead of a fixed centre. (2)

13.4 State TWO disadvantages of the CNC lathe when compared with the conventional lathe. (2)

[10]

ENGINEERING

QUESTION 14: MILLING MACHINE

14.1 Write only the names of the components of the milling machine (FIGURE 4) next to the letters (A–E) in the ANSWER BOOK.

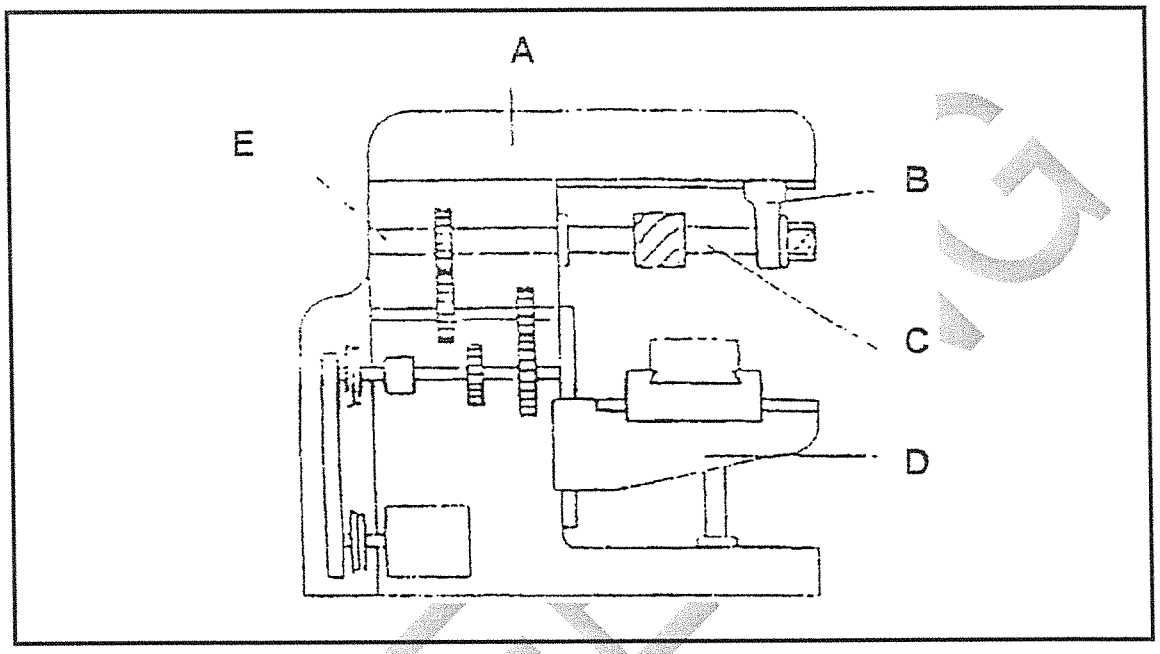

FIGURE 4 (5)

14.2 Indicate whether the following statements are TRUE or FALSE. Choose the answer and write only 'true' or 'false' next to the question number (14.2.1–14.2.5) in the ANSWER BOOK.

14.2.1 Table strips are used to stop the automatic feed at pre-set positions.

14.2.2 An air hose can be used to remove the chips from the machine.

14.2.3 Plain and universal milling machines are also known as knee-type machines.

14.2.4 Gear cutting can be done in a dividing head on a milling machine.

14.2.5 The adjustable tail stock is used to adjust the table upward or downwards.

(5 × 1) (5)
[10]

TOTAL SECTION B: 40
GRAND TOTAL: 100

Copyright reserved

FORMULA SHEET

Any applicable formula may also be used.

1. $V = \pi \times D \times N$

2. $w = feed/stroke \times strokes/min \times t$

3. $Strokes/min = \dfrac{S}{Length\ of\ stroke} \times Ratio$

4. $h = \dfrac{D}{6}$

5. $w = \dfrac{D}{4}$

ENGINEERING

Copyright reserved

higher education & training

Department:
Higher Education and Training
REPUBLIC OF SOUTH AFRICA

MARKING GUIDELINE

NATIONAL CERTIFICATE

NOVEMBER EXAMINATION

FITTING AND MACHINING THEORY N1

11 NOVEMBER 2014

This marking guideline consists of 10 pages.

Copyright reserved

SECTION A

QUESTION 1: OCCUPATIONAL SAFETY

1.1 1.1.1

- Advertise and propagate correct techniques by means of demonstration boards.
- Prepare the worker by teaching him to know his work thoroughly.
- Stress the necessity of proper lighting.
- Maintenance of electric cables and electric hand tools
- Protection of machinery blades
- Workshop conditions and the prevention of accidents by keeping floors and walkways clear (Any 3 × 1) (3)

1.1.2

- To carry or lift objects with sharp edges
- To prevent cuts from sharp edges
- To prevent burns from hot items
- To prevent chemical burns when handling hazardous chemicals
- To improve grip when handling objects (Any 2 × 1) (2)

[5]

OR

1.2 1.2.1 At each change room (1)

1.2.2 Complaints on safety or health conditions (2)

1.2.3 Competent person appointed by the manager on a daily basis (2)

[5]

Copyright reserved

QUESTION 2: MEASURING INSTRUMENTS

2.1 2.1.1 99,89 mm

2.1.2 0,01 mm

2.1.3 13 mm

2.1.4 A long handle is supplied for taking measurements at the back of deep-diameter holes.

(4)

2.2 2.2.1

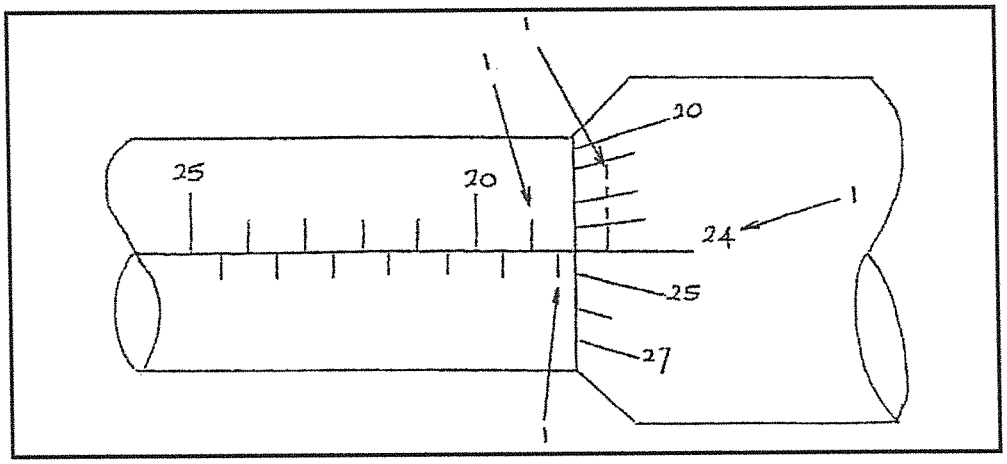

(4)

2.2.2

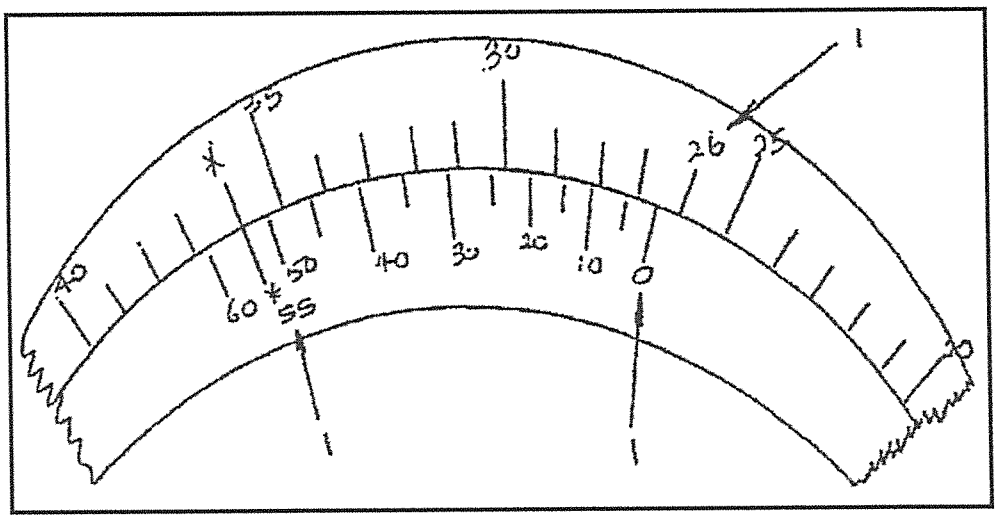

(3)
[11]

Copyright reserved

QUESTION 3: SCREW THREADS

3.1

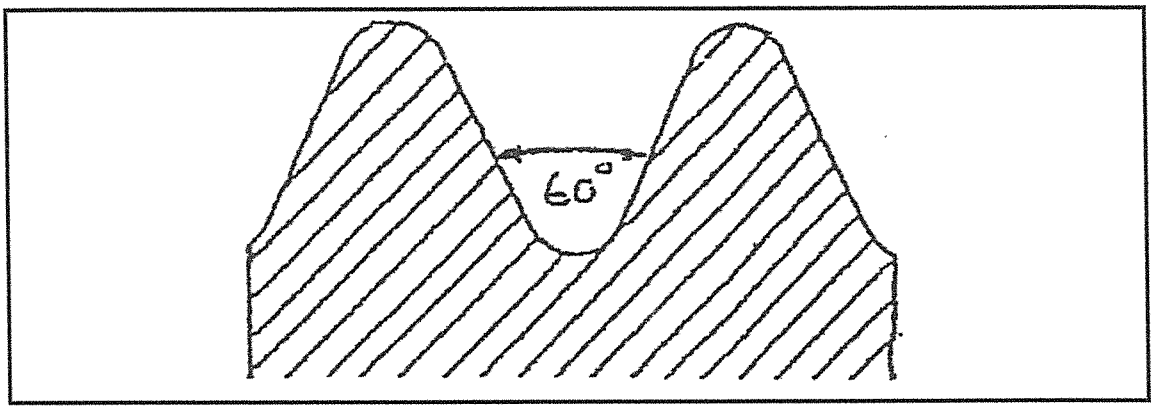

3.2

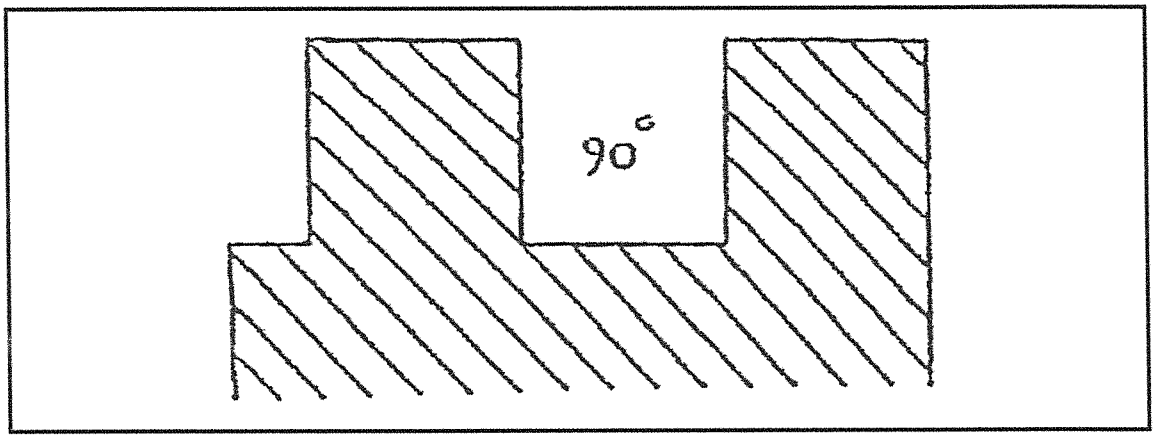

3.3

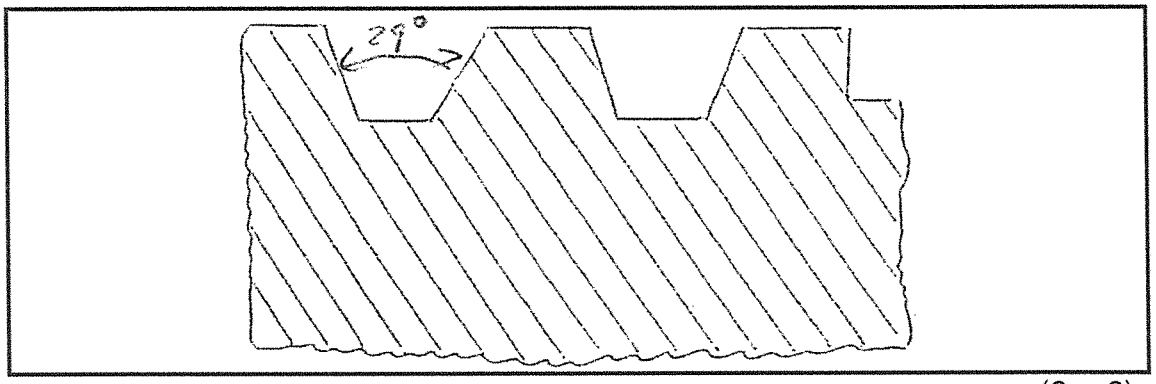

(3 × 2) **[6]**

Copyright reserved

QUESTION 4: HAND TOOLS

4.1 Soft-face hammers are used to hammer delicate workpieces with finished surfaces.

4.2 We use a second-cut grade file to rough out hard metals and to file the work-piece to almost size.

4.3 To cut or shave material of sheet metal or to thin metal down by removing material from the sides of the workpiece.

4.4 To mark off holes which must be drilled.

4.5 It is used to grip small cylindrical or flat sheet metal workpieces or use them to bend wire and thin sheet metal.

4.6 Chain tongs are used for gripping and turning pipes.

(6 × 1) **[6]**

QUESTION 5: METALS AND PLASTICS

5.1 Grey cast iron – machine tools, machine beds, and frames, engine blocks, marking-off tables, surface plates.

White cast iron – Crushing equipment
– Grinding mills
– Cams (4)

5.2 Hardening – The whole workpiece is hardened and produces a hard wear-resistant part.

Case hardening – It produces a hard outer skin or surface with a soft inner core to handle shock loads. (2)

5.3 5.3.1 Brass – copper and zinc
Properties: Low melting point
Strong and ductile
Corrosion resistant
Uses : Wire rods
Tubes
Water fittings
Bolts and nuts

Copyright reserved

5.3.2 Bronze – copper and tin
Properties – Resistant wear
– Corrosion resistant
Uses : – Gears
– Valves
– Machine bearings
– Pump impellers
One mark for composition
One mark for one property
One mark for one use

(2 × 3) (6)
[12]

QUESTION 6: MARKING-OFF

A – Divider
B – Scriber
C – Jenny calliper, odd-leg caliper
D – Angle plate
E – Surface gauge

(5 × 1) **[5]**

QUESTION 7: KEYS AND KEYWAYS

7.1 Shaping machine – with rigid boring bar or solid grooving tool

Milling machine – with slotting attachment or using side or face cutter (1)

7.2
- The feed shaft for a lathe
- The lifting spindle of a jack
- A tailstock spindle, where the key prevents the spindle from turning

(Any 2 × 1) (2)

7.3 D = 45 mm

RTC = H&W

$$H = \frac{D}{6} = \frac{45}{6} = 7{,}5 \text{ mm}$$

$$W = \frac{D}{4} = \frac{45}{4} = 11{,}25 \text{ mm}$$

$$L = 1{,}5\ D = 1{,}5 \times 45 = 67{,}5 \text{ mm}$$

(3)
[6]

Copyright reserved

QUESTION 8: FASTENERS

8.1 Locking wire – When there are several screws in close proximity on a small pitch circle

8.2 Allen screws – Used to retain a knob, collar or pulley on a shaft.

8.3 Drive screws – are used when it is impractical to use rivets.

8.4 Cir-clips – Are used to prevent axial or end movement of parts

(4 × 1) **[4]**

QUESTION 9: HAND TAPS, STOCKS, DIES AND REAMERS

9.1
- The drilled hole is too small or large: Drill the hole to the correct size.
- The tap is not square in the hole. Keep the tap in an upright position and test it for squareness.
- Tap wrench is not used correctly. Use correct pressure on the tap wrench so that when the thread starts the tap draws or pulls itself into the hole.
- Cutting fluid is not used: Use a suitable cutting fluid for the type of material being tapped.
- The tap is turned after the bottom of the hole is reached.
- Only turn the tap until the correct depth is reached.
- Excessive material is not cleared away often enough.
- Turn the tap in an anticlockwise direction as often as possible and clear excess material away.

(Any 4 × 1) (4)

9.1 The letter L is usually stamped on the shank of the left tap. (1)
[5]

TOTAL SECTION A: 60

Copyright reserved

SECTION B

ANSWER ANY FOUR OF THE FOLLOWING QUESTIONS FROM THIS SECTION

QUESTION 10: DRILLING MACHINES

10.1
- The drill is cooled
- Higher cutting speeds may be obtained
- Cuttings are washed away
- A smooth finish is provided
- Corrosion is prevented
- The workpiece is cooled

(Any 3 × 1) (3)

10.2

$$N = \frac{1\,000S}{\pi D}$$

$$D = \frac{1\,000S}{\pi \times N}$$

$$= \frac{1\,000 \times 30}{\pi \times 800}$$

$$= 11{,}94\ mm$$

$$N = 12\ mm$$

(3)

10.3
10.3.1 False
10.3.2 True
10.3.3 False
10.3.4 True

(4 × 1) (4)
[10]

QUESTION 11: GRINDING MACHINES AND MACHINE CUTTING TOOLS

111.1 Positive rake is when the wedge angle is less than 90 degrees.

Negative rake is when the cutting edge is strong and the wedge is strong and the wedge angle is 90 degrees. (2)

11.2 In order for affluent material coming off in long continuous chips and making handling dangerous, a chip breaker provides chip control. The action of the chip breaker forces the chip into a tighter spiral than it will normally form, this work hardens the chip, making it sufficiently brittle to break up into short lengths which are easily disposed of. (2)

11.3 A – Side-roughing tool
B – Knife tool
C – Screw-cutting tool
D – Grooving tool
E – Parting tool

(6 × 1) (6)
[10]

Copyright reserved

QUESTION 12: GENERAL

12.1 True
12.2 False
12.3 False
12.4 True
12.5 False
12.6 True
12.7 False
12.8 True
12.9 True
12.10 True

(10 × 1) **[10]**

QUESTION 13: CENTRE LATHE

13.1
- General turning
- Taper turning
- Internal turning operation
- Drilling operation
- Facing
- Screw-thread cutting

(Any 3 × 1) (3)

13.2
- The four-jaw independent chuck has considerable gripping powder allowing the operator to take heavy cuts.
- The jaws can hold a wide range of irregular shapes.
- You can set workpieces to run concentrically or eccentrically.
- The chuck stays accurate, even if it is worn.
- You can readily do facing or boring.

(Any 3 × 1) (3)

13.3
- The rotating centre cannot damage the centre hole.
- Less friction between centre and centre hole.

(2)

13.4
- The setup time to manufacture one part is a loss.
- It is more expensive.
- It costs a lot to repair.

(Any 2 × 1) (2)
[10]

Copyright reserved

QUESTION 14: MILLING MACHINE

14.1
A – Overarm
B – Arbor support
C – Arbor
D – Knee
E – Spindle

(5 × 1) (5)

14.2
14.2.1 True
14.2.2 False
14.2.3 True
14.2.4 True
14.2.5 False

(5 × 1) (5)
[10]

TOTAL SECTION B: 40
GRAND TOTAL: 100

Copyright reserved