higher education & training

Department:
Higher Education and Training
REPUBLIC OF SOUTH AFRICA

MARKING GUIDELINE

NATIONAL CERTIFICATE

FAULT FINDING AND PROTECTIVE DEVICES N4

19 April 2021

This marking guideline consists of 6 pages.

Copyright reserved

QUESTION 1

1.1 1.1.1

- Situation factor:✓ What happened and exactly how did it happen for the machine to stop and become faulty?✓
- Human factor:✓ Who was involved and how would those involved influence the identification of the actual fault problem?✓
- Place factor:✓ Where did the fault happen? Did the place have a significant influence?✓
- Time factor:✓ When did the fault occur? Is the time factor important? How important is time in fixing the fault?✓
- Casual factor:✓ Why did the fault happen? Does the problem always occur in similar situations?✓ (5 × 2) (10)

1.1.2

- The circumstances under which the fault occurred should be investigated.
- These include gathering and analysing the facts, looking at the meaning of such facts and what conclusion can be made.
- Proper measurements/conclusions should be made and the records should be kept. (3)

1.2

- It is the detection, location
- and repair of random faults. (2)

1.3

- Functional block diagram✓– Presenting the equipment as a series of functional circuit blocks✓
- Test data charts✓ – Giving the relevant data on how to prove the particular test points and their location✓
- Layout diagrams✓ – Giving the physical arrangement of the equipment, its functional blocks and locating the test point used✓
- Test flow charts✓ – Guided procedure for location of the faulty unit/component✓
- Symptom analysis charts✓ – Guided procedure for locating the faulty unit/component, based on the fault symptoms available✓ (5 × 2) (10)

[25]

QUESTION 2

2.1

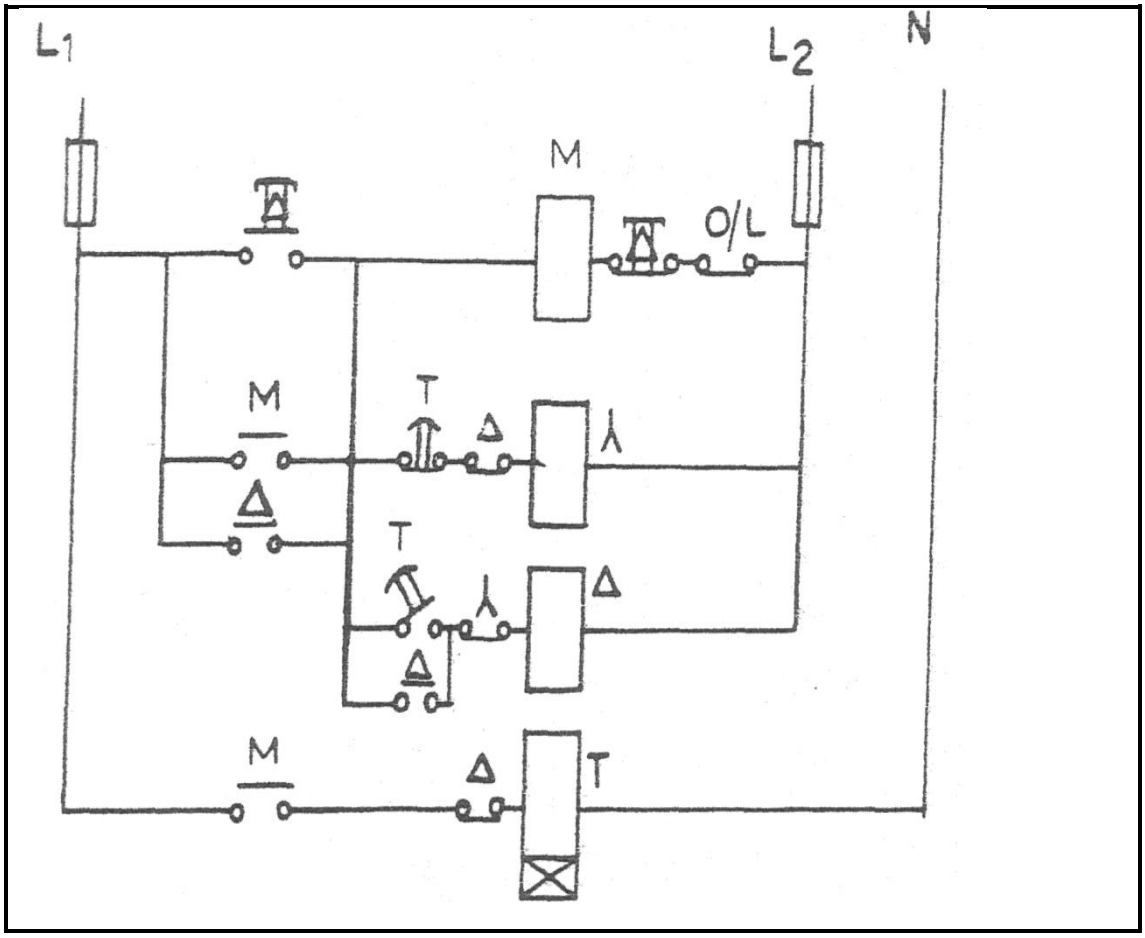

(8)

2.2
- Error of parallax
- Meter not 'zeroed'
- Incorrect scale selection: DC instead of AC
- Is the correct circuit being checked?
- When using millimetres on DC, ripple will or can blow the fuse.
- Millimetres should be used when drawing a very small current.
- A filter should be used on a digital meter when checking amplifier circuits.
- If an unusual or odd result is obtained, question it. (Any 6 × 1) (6)

2.3
- The shunt resistance should be low to prevent a high current
- from flowing through the coil.
- The current must not exceed 50 milliamperes. (3)

2.4
- Eddy-current damping
- Air damping (2)

[19]

QUESTION 3

3.1 3.1.1 (a) Amplifier
(b) Deflection
(c) Volts
(d) Division (4)

3.1.2 Luminescent (2)

3.1.3 Visual (2)

3.2

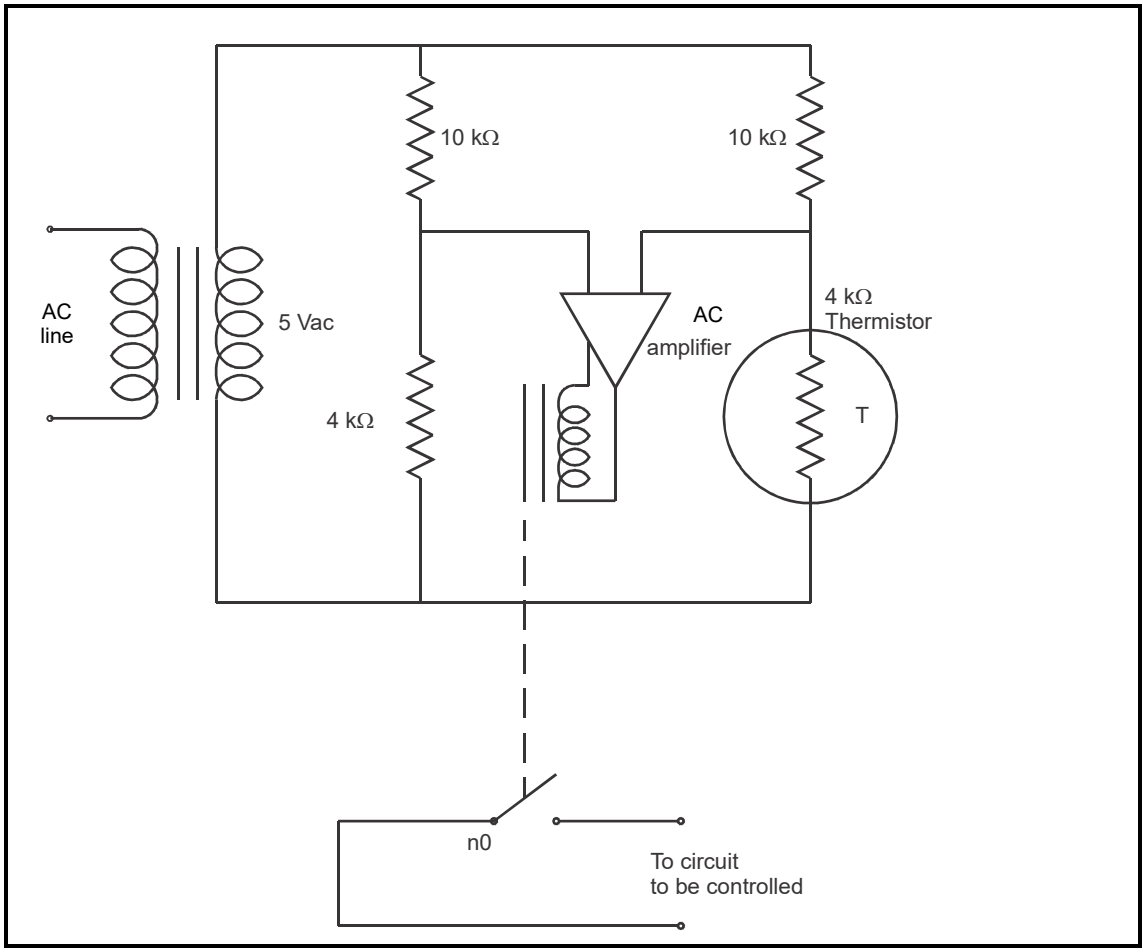

(5)

3.3 It consists of:
- A current coil which is compiled in series with the main circuit
- A soft-iron core connected with an oil dashpot time-delay mechanism
- A normally closed contact for the control circuit (3)

[16]

QUESTION 4

4.1 Eddy currents flow in the core and they cause heat. (2)

4.2 Inductance can be defined as the amount of magnetic flux linkages/ampere of current producing the flux. (3)

4.3

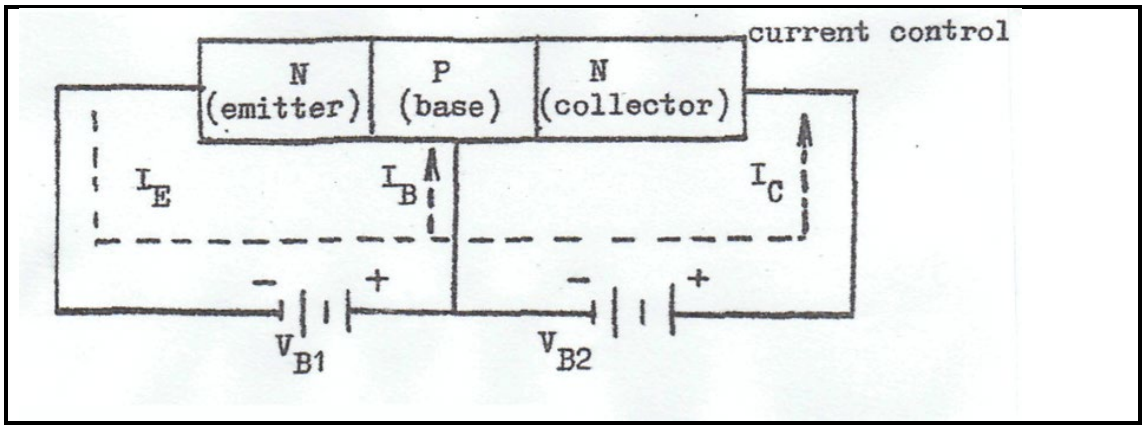

(6)
[11]

QUESTION 5

5.1

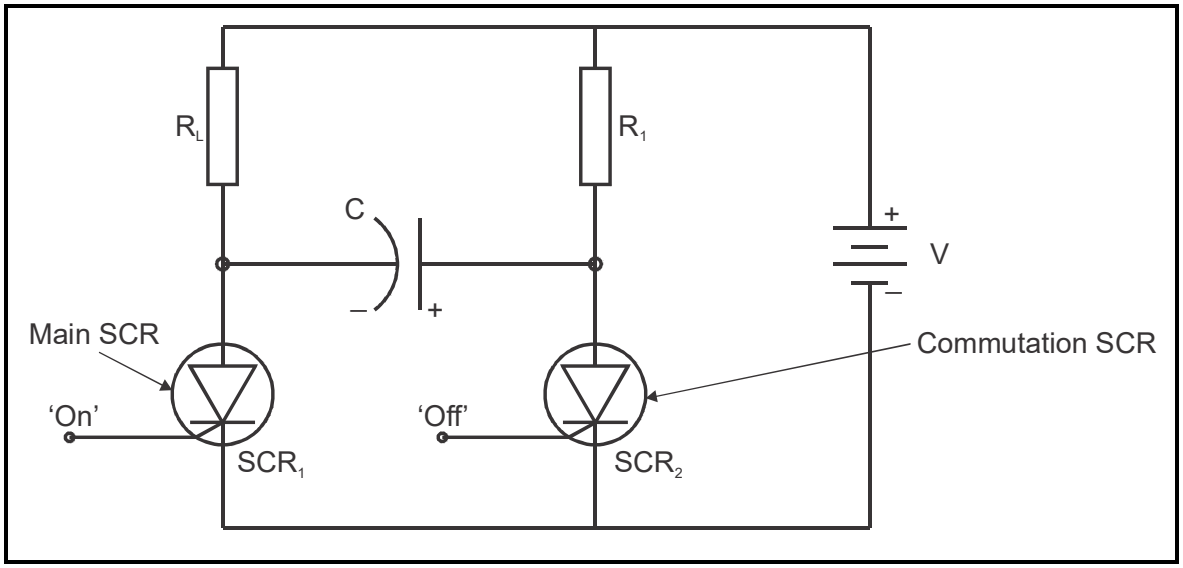

(6)

5.2

- If the sweep is not triggered by a certain value of the y-signal or if the y-signal and time-base signal are out of phase
- the screen would be filled with traces
- not one coinciding with the previous one and a spaghetti effect will be created.

(3)

5.3

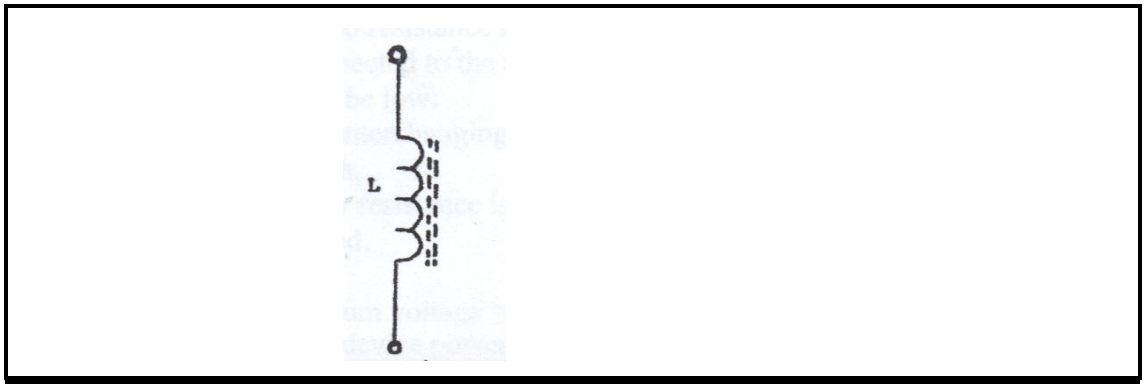

(2)
[11]

QUESTION 6

6.1 $\overline{\overline{xy} + xyz} \cdot (\overline{xy\bar{z} + \bar{x}yz})$

$\overline{\overline{XY} \cdot \overline{XYZ} + \cancel{XY\bar{Z}} \cdot \cancel{\bar{X}YZ}}$ ✓

$\overline{\overline{XY}} + \overline{\overline{XYZ}} + \overline{\overline{XY\bar{Z}}} + \overline{\overline{\bar{X}YZ}}$ ✓

$XY + XYZ + XY\bar{Z} + \bar{X}YZ$ ✓

$XY(1 + 2) + Y(X\bar{Z} + \bar{X}Z)$ ✓

$XY + Y$ ✓

$Y(X + 1)$ ✓

(6)

6.2

A	B	C	A+B	A+C	(A+B) (A+C)
0	0	0	0	0	0✓
0	0	1	0	1	0
0	1	0	1	0	0
0	1	1	1	1	1
1	0	0	1	1	1
1	0	1	1	1	1
1	1	0	1	1	1
1	1	1	1 ✓	1 ✓	*1* ✓

(8)

6.3 6.3.1 A
6.3.2 A
6.3.3 A
6.3.4 A

(4 × 1) (4)

[18]

TOTAL: 100

Copyright reserved