higher education & training

Department:
Higher Education and Training
REPUBLIC OF SOUTH AFRICA

T660**(E)**(A9)T

NATIONAL CERTIFICATE

FAULT FINDING AND PROTECTIVE DEVICES N4

(8080104)

9 April 2019 (X-Paper)
09:00–12:00

This question paper consists of 4 pages and 1 diagram sheet.

Copyright reserved

DEPARTMENT OF HIGHER EDUCATION AND TRAINING
REPUBLIC OF SOUTH AFRICA

NATIONAL CERTIFICATE
FAULT FINDING AND PROTECTIVE DEVICES N4
TIME: 3 HOURS
MARKS: 100

INSTRUCTIONS AND INFORMATION

1. Answer ALL the questions.
2. Read ALL the questions carefully.
3. Number the answers according to the numbering system used in this question paper.
4. Sketches must be large, neat and fully labelled.
5. Write neatly and legibly.

Copyright reserved

QUESTION 1

1.1 Answer the following questions with reference to the nine-point plan in aid of fault finding:

1.1.1 Name and explain the correct methods which could be applied with success when collecting facts. (6)

1.1.2 What has been achieved? (4)

1.2 Draw the following symbols:

1.2.1 Emergency stop spring-loaded

1.2.2 Three-pole switch

1.2.3 Circuit breaker

1.2.4 Polarised capacitor

1.2.5 Double insulated

(5 × 1) (5)
[15]

QUESTION 2

2.1 Draw an automatic star-delta motor starter for a three-phase induction motor. (7)

2.2 Fault finding is the detection of an abnormal condition within the system.

State and describe THREE fault finding methods. (6)

2.3 Explain in your own words why ammeters are low-resistance instruments. (3)

2.4 Draw a Wheatstone-bridge circuit. (7)
[23]

QUESTION 3

3.1 Explain the operation of the voltage tester. (5)

3.2 Complete the following sentences by filling the missing word(s). Write only the word(s) next to the question number (3.2.1–3.2.5) in the ANSWER BOOK.

3.2.1 … diagram presents the equipment as a series of functional blocks.

3.2.2 … give relevant data on how to prove the particular test point and their location.

Copyright reserved

3.2.3 … give the physical arrangement of the equipment.

3.2.4 … guide procedure for locating the faulty unit.

3.2.5 … guide procedure for locating the faulty component, based on the fault symptoms available.

(5 × 1) (5)

3.3 Refer to FIGURE 1 on the DIAGRAM SHEET (attached) and draw up a/an action/reaction table for the three-step stator-rotor reversing starter, operated by a controller. (8)

3.4 Name THREE types of losses. (3)

[21]

QUESTION 4

4.1 What will happen when voltages are applied simultaneously to the X and Y plates? (2)

4.2 Name FOUR faults that can be found in a diode. (4)

4.3 Show by means of the Lissajous figure diagram, when the frequency of the vertical signal is twice that of the horizontal signal. (5)

4.4 What is the voltage tester normally used for? (2)

4.5 How can eddy current be reduced in a steel core? (2)

[15]

QUESTION 5

5.1 Show by means of a diagram what method is used to compensate the Zener diode temperature coefficient effect during manufacturing. (3)

5.2 Explain how to test a diode to determine if it is faulty or not? (4)

5.3 Name THREE elementary amplifier circuits. (3)

[10]

Copyright reserved

QUESTION 6

6.1 Draw the symbol of an OR gate. (1)

6.2 Simplify the following expression:

(X + Y) (X + Z) (5)

6.3 Complete the following laws and identities of Boolean algebra:

6.3.1 A + 1 =

6.3.2 A + A =

6.3.3 A • O =

6.3.4 A + AB =

6.3.5 A (A + B) =

(5 × 1) (5)

6.4 Design a logic circuit to fit the expression Q = (A + C)(B + C)(A + B). (5)
[16]

TOTAL: 100

Copyright reserved

(8080104)

DIAGRAM SHEET

FAULT FINDING AND PROTECTIVE DEVICES N4

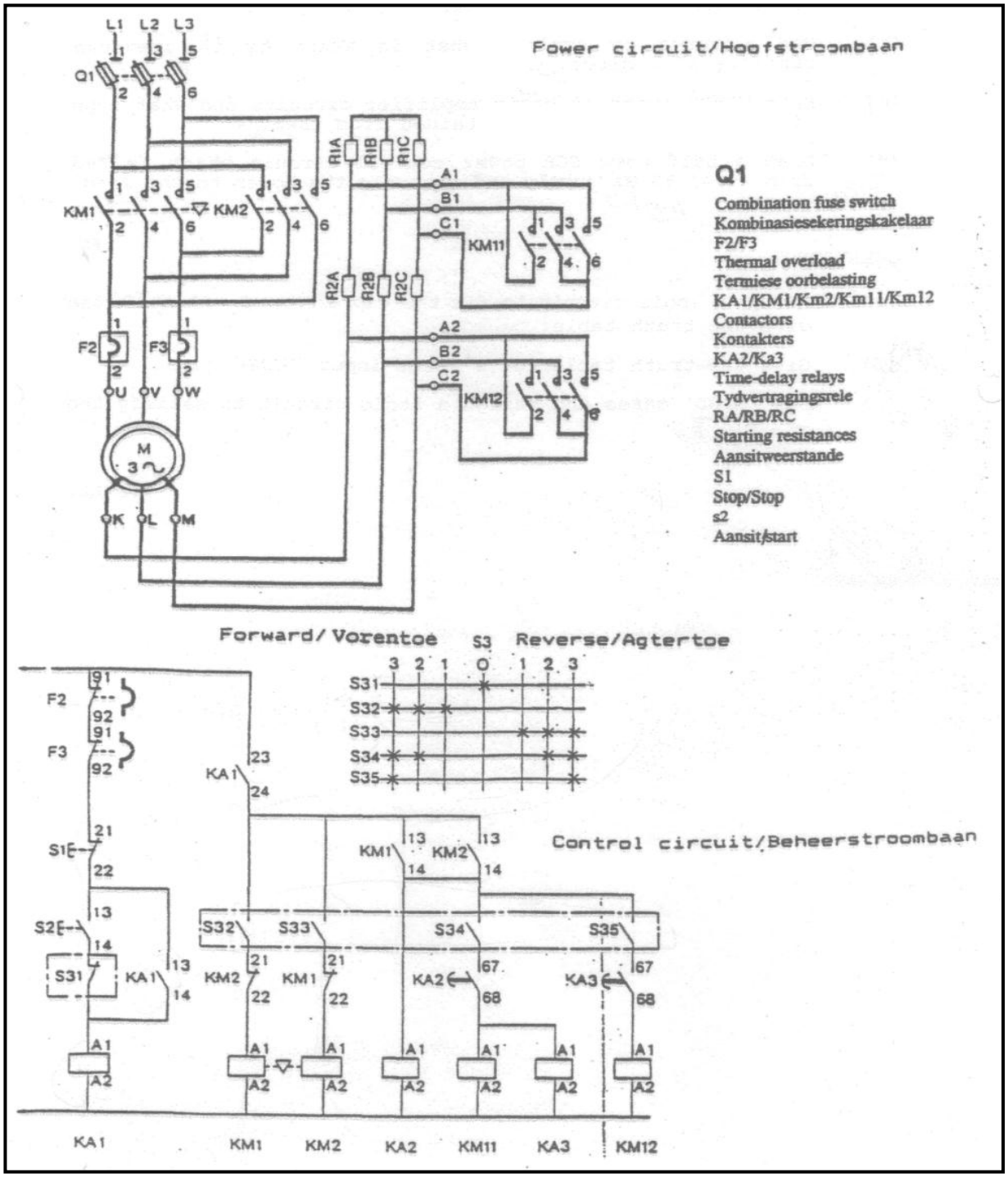

Copyright reserved