higher education & training

Department:
Higher Education and Training
REPUBLIC OF SOUTH AFRICA

NASIENRIGLYN

NASIONALE SERTIFIKAAT

INGENIEURSWETENSKAP N4

9 April 2021

Hierdie nasienriglyn bestaan uit 11 bladsye.

Kopiereg voorbehou

✓ = 1 punt
√ = ½ punt

AFDELING A

VRAAG 1: ALGEMEEN

1.1 Newton se derde wet: Vir elke aksie✓ is daar 'n gelyke en teenoorgestelde reaksie.✓

1.2 Hooke se wet: Vir 'n elastiese voorwerp✓ is die vervorming eweredig tot die spanning wat dit veroorsaak.✓

1.3 Spanning: Die vermoë van 'n voorwerp om die uitwerkings van 'n eksterne krag✓ te weerstaan.✓

1.4 Pascal se wet: Wanneer druk op die oppervlak van 'n vloeistof uitgeoefen word, word die krag met dieselfde intensiteit in alle rigtings✓ deur die vloeistof oorgedra.✓

1.5 Traagheidsmoment: Die traagheidsmoment van 'n liggaam om 'n as is die som van die produkte van die massa-elemente✓ en die vierkante van hul afstande vanaf die as.✓

(5 × 2) **[10]**

TOTAAL AFDELING A: 10

VRAAG 2: KINEMATIKA

2.1 2.1.1

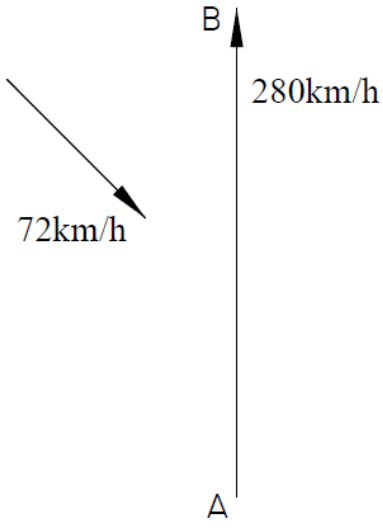

$Horizontal_components:$

$180\cos\theta = 72\cos 45$

$\theta = \cos^{-1}\dfrac{72\cos 45}{180}$ ✓

$\theta = 79{,}524°$ ✓

Die loods moet Wes 79,524° Noord peil.✓

2.1.2 $Vy = 280\sin 79,524 - 72\sin 45$

$Vy = 224,421 km/h$ ✓

$t = \frac{s}{v}$

$t = \frac{275}{224,421}$ ✓

$\underline{t = 1,225 hours}$ ✓

$\underline{t = 1hr 13\min 31,352\sec}$

(3 × 2) (6)

2.2 2.2.1 $Vy = 23,5\sin 32$

$Vy = 12,453 m/s$ ✓

$v^2 = u^2 - 2gs$

$0 = 12,453^2 - 2(9,8)s$ Die hoogte wat die bal bereik.

$19,6s = 12,453^2$

$s = \frac{155,077}{19,6}$ ✓

$\underline{s = 7,912m}$ ✓

2.2.2 $v = u - gt$

$0 = 12,453 - 9,8t$ ✓

$t = \frac{12,453}{9,8}$ ✓

$\underline{t = 1,271s}$ ✓

(3 × 2) (6)
[12]

VRAAG 3: HOEKBEWEGING

3.1 3.1.1 $\alpha = \frac{2\pi(n_2 - n_1)}{t}$

$\alpha = \frac{2\pi(525 - 15)}{6}$

$\alpha = 170\pi rad.s^2$ ✓

3.1.2 $\theta = \frac{\omega_1 + \omega_2}{2}t$

$\theta = \frac{2\pi(525) + 2\pi(15)}{2} \times 6$

$\underline{\theta = 3240\pi rad}$ ✓

(2 × 1) (2)

3.2 3.2.1

$$T = F.r$$
$$T = 775 \times 9.8 \times \frac{0,325}{2}$$
$$T = 1234,188N.m \checkmark$$

3.2.2

$$P = T.\omega$$
$$P = T.2.\pi.n$$
$$P = 1234,188 \times 2 \times \pi \times 18$$
$$P = 139,583kW \checkmark$$

(2 × 1) (2)
[4]

VRAAG 4: DINAMIKA

4.1 4.1.1

$$v = 75 \times \tfrac{1000}{3600} = 20,833m/s$$
$$E_k = \tfrac{1}{2}m.v^2$$
$$E_k = \tfrac{1}{2} \times 5500 \times 20,833^2 \checkmark$$
$$E_k = 1,194MJ \checkmark$$

(2)

4.1.2

$$a = \frac{v^2 - u^2}{2s}$$
$$a = \frac{0^2 - (20,833)^2}{2(55)} \checkmark$$
$$a = 3,946m/s^2 \checkmark$$

$$F = m.a$$
$$F = 5500 \times 3,946$$
$$F = 21703N \checkmark$$

(3)

4.2 4.2.1

$$F_{UP} = mg + ma$$
$$F_{UP} = (35 \times 9,8) + (35 \times 1,6) \checkmark$$
$$F_{UP} = 399N \checkmark$$

4.2.2

$$W = F.s$$
$$W = 399 \times 45 \checkmark$$
$$W = 179,55kJ \checkmark$$

(2 × 2) (4)

4.3 4.3.1

$$F_\mu = F_s$$
$$F_\mu = mg.\sin\theta$$
$$F_\mu = (17\times 9,8)\times \sin(19,5) \checkmark$$
$$\underline{F_\mu = 55,612N} \checkmark$$

4.3.2

$$\mu = \frac{F_\mu}{mg}$$
$$\mu = \frac{55,612}{17\times 9,8} \checkmark$$
$$\mu = 0,334 \checkmark$$

(2 × 2) (4)
[13]

VRAAG 5: STATIKA

5.1 5.1.1 Moment om B:

$$\Sigma CWM = \Sigma ACWM$$
$$5D + (1\times 15k) = (1,5(5k\times 5)) + (4\times 52k) + (7\times 35k)$$
$$5D = 37,5k + 208k + 245k - 15k \checkmark$$
$$D = \frac{475,5k}{5}$$
$$\underline{D = 95,1kN} \checkmark$$

Moment om D:

$$\Sigma CWM = \Sigma ACWM$$
$$5B + (2\times 35k) = (1\times 52k) + (3,5(5k\times 5)) + (6\times 15k)$$
$$5B = 52k + 87,5k + 90k - 90k \checkmark$$
$$B = \frac{159,5k}{5}$$
$$\underline{B = 31,9kN} \checkmark$$

5.1.2

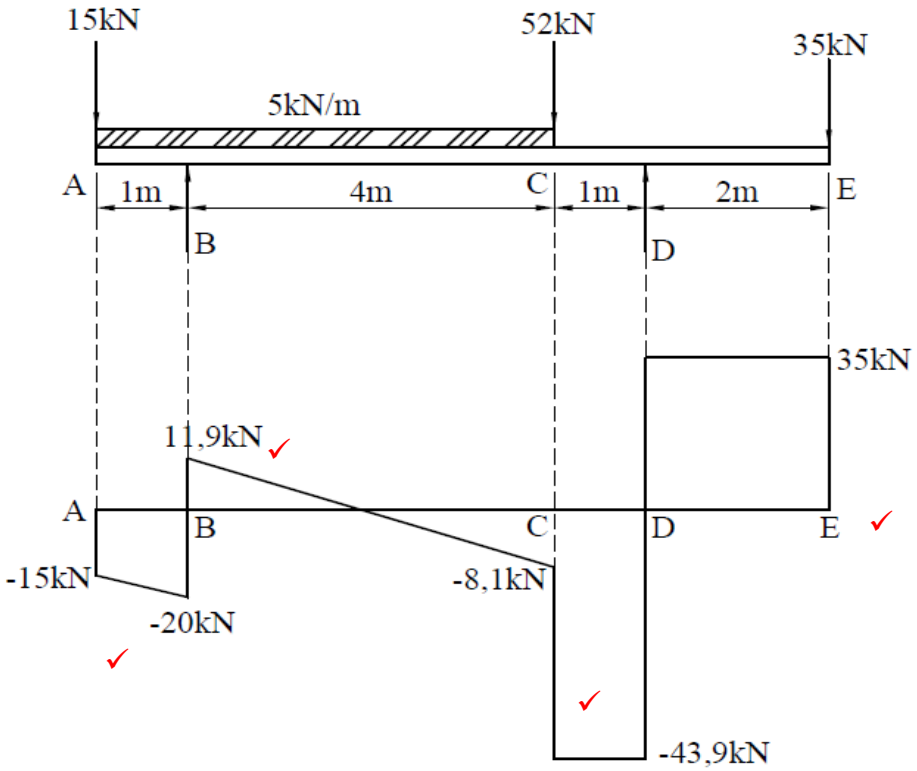

(2 × 3) (6)

5.2

	Oppervlakte	Sentroïed	
Driehoek	$A=\frac{1}{2}B.H$ $A=\frac{1}{2}\times 75\times 55$ $A=4125,5mm^2$	$x=\frac{1}{3}b$ $x=\frac{1}{3}75$ $x=25mm$	$y=\frac{1}{3}h$ $y=\frac{1}{3}\times 55$ $y=18,333mm$
Vierkant	$A=L.B$ $A=14\times 14$ $A=196mm^2$	$x=\frac{1}{2}b$ $x=\frac{1}{2}14$ $x=7mm$	$y=\frac{1}{2}h$ $y=\frac{1}{2}14$ $y=7mm$

Moment om x-as:

$$Moment-total-area\times y=\Sigma moment-of-parts$$
$$(4125,5-196)\times y=(4125,5\times 18,333)+(196\times 7)$$
$$y=\frac{74260,792}{3929,5}$$
$$y=18,898mm$$

Moment om y-as:

$$Moment-total-area\times x=\Sigma moment-of-parts$$
$$(4125,5-196)\times x=(4125,5\times 25)+(196\times 7)$$
$$x=\frac{102948,5}{3929,5}$$
$$x=26,199mm$$

$(26,199;18,898)$ (7)

[13]

VRAAG 6: HIDROULIKA

6.1 6.1.1

$$P = \frac{F}{A}$$
$$F = P.A$$
$$m_t g = P \times \frac{\pi D^2}{4}$$
$$m_t = \frac{1,2 \times 10^6}{9,8} \times \frac{\pi (0,45)^2}{4}$$
$$m_t = 19474,669kg \quad ✓$$
$$m_t = m_a + m_r$$
$$m_a = m_t - m_r \quad ✓$$
$$m_a = 19474,669 - 650$$
$$\underline{m_a = 18824,669kg} \quad ✓$$

(3)

6.1.2

$$W = F.s$$
$$W = (19474,669 \times 9,8) \times 0,3 \quad ✓$$
$$\underline{W = 57,256kJ} \quad ✓$$

6.1.3

$$P = \frac{W}{t}$$
$$P = \frac{57256}{5} \quad ✓$$
$$\underline{P = 11,451kW} \quad ✓$$

(2 × 2) (4)

6.2 6.2.1

$$Vol/stroke = \frac{\pi D^2}{4} \times L$$
$$Vol/stroke = \frac{\pi (0,075)^2}{4} \times 0,225$$
$$\underline{Vol/stroke = 994,02 \times 10^{-6} m^3}$$

$$r/s = \frac{175}{60} = \underline{2,917r/s} \quad ✓$$

$$Vol/\sec = (2,917 \times 994,02 \times 10^{-6}) \times 3$$
$$\underline{Vol/\sec = 8,699 \times 10^{-3} m^3/s} \quad ✓$$

$$P = p \times Vol/s$$
$$P = 775 \times 10^3 \times 8,699 \times 10^{-3} \quad ✓$$
$$\underline{\underline{P = 6,742kW}} \quad ✓$$

(4)

6.2.2

$$Vol/\min = Vol/stroke \times r/\min \times 3 \times \frac{96}{100}$$ ✓

$$Vol/\min = 994,02 \times 10^{-6} \times 175 \times 3 \times \frac{96}{100}$$ ✓

$$Vol/\min = 0,501m^3$$

$$\underline{Vol/\min = 501\ell}$$ ✓ (3)

6.3 6.3.1

$$\frac{W}{F} = \frac{D^2}{d^2}$$

$$F = \frac{d^2.W}{D^2} \times \frac{75}{100}$$ ✓

$$F = \frac{0,015^2.(3500 \times 9,8)}{0,085^2} \times \frac{75}{100}$$ ✓

$$\underline{F = 801,125N}$$ ✓

6.3.2

$$Vol_{Pl} \times n = Vol_{Ram}$$

$$n = \frac{D^2 \times L}{d^2 \times \ell}$$ ✓

$$n = \frac{0,085^2 \times 0,15}{0,015^2 \times 0,03}$$ ✓

$$n = 160,556$$

$$\underline{n = 161strokes}$$ ✓

(2 × 3) (6)
[20]

VRAAG 7: SPANNING, VERVORMING EN YOUNG SE MODULUS

7.1 7.1.1

$$\sigma = \frac{F}{A}$$

$$\sigma = \frac{(650 \times 9,8)}{\frac{\pi(0,005)^2}{4}}$$ ✓

$$\underline{\sigma = 324,421MPa}$$ ✓

7.1.2

$$\varepsilon = \frac{\Delta\ell}{L}$$

$$\varepsilon = \frac{800 \times 10^{-6}}{4,7}$$ ✓

$$\underline{\varepsilon = 0,00017}$$ ✓

(2 × 2) (4)

7.2 7.2.1

$10k \Rightarrow$

$\sigma = \frac{F}{A} = \frac{10k}{254,469\times10^{-6}} = 39,297MPa$

$\varepsilon = \frac{\Delta\ell}{L} = \frac{0,0151}{75} = 201,333\times10^{-6}$ √

$20k \Rightarrow$

$\sigma = \frac{F}{A} = \frac{20k}{254,469\times10^{-6}} = 78,595MPa$

$\varepsilon = \frac{\Delta\ell}{L} = \frac{0,0221}{75} = 294,667\times10^{-6}$ √

$30k \Rightarrow$

$\sigma = \frac{F}{A} = \frac{30k}{254,469\times10^{-6}} = 117,893MPa$

$\varepsilon = \frac{\Delta\ell}{L} = \frac{0,0325}{75} = 433,333\times10^{-6}$ √

$40k \Rightarrow$

$\sigma = \frac{F}{A} = \frac{40k}{254,469\times10^{-6}} = 157,19MPa$

$\varepsilon = \frac{\Delta\ell}{L} = \frac{0,0465}{75} = 620\times10^{-6}$ √

$50k \Rightarrow$

$\sigma = \frac{F}{A} = \frac{50k}{254,469\times10^{-6}} = 196,488MPa$

$\varepsilon = \frac{\Delta\ell}{L} = \frac{0,0575}{75} = 766,667\times10^{-6}$ √

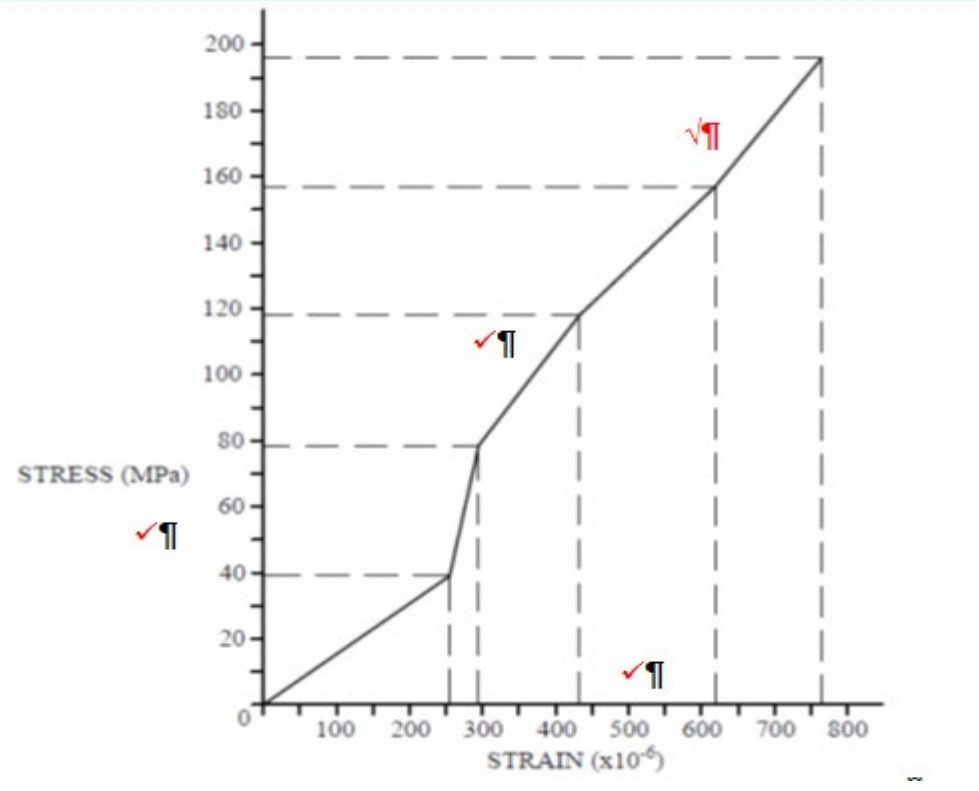

(6)

7.2.2
$$E = \frac{\sigma}{\varepsilon}$$
$$E = \frac{196,488 \times 10^{6}}{766,66 \times 10^{-6}} \checkmark$$
$$\underline{E = 256,29GPa} \checkmark$$

7.2.3
$$\%reduction = \frac{A_o - A_f}{A_o} \times 100$$
$$\%reduction = \frac{d_o^2 - d_f^2}{d_o^2} \times 100$$
$$\%reduction = \frac{18^2 - 12,16^2}{18^2} \times 100 \checkmark$$
$$\underline{\%reduction = 54,362\%} \checkmark$$

(2 × 2) (4)
[14]

VRAAG 8: WARMTE

8.1
$$\Delta V = \gamma \times V_O \times (T_F - T_O)$$
$$\Delta V = 3 \times 17 \times 10^{-6} \times 0,685 \times (347 - 289) \checkmark$$
$$\underline{\Delta V = 2,026 \times 10^{-3} m^3} \checkmark$$ (2)

8.2
$$\frac{P_1.V_1}{T_1} = \frac{P_2.V_2}{T_2}$$
$$P_2 = \frac{P_1.V_1.T_2}{T_1.V_2} \checkmark$$
$$P_2 = \frac{475 \times 10^3 \times 0,45 \times 65}{16 \times 0,28} \checkmark$$
$$\underline{P_2 = 3101,283kPa} \checkmark$$ (3)

8.3
$$P.V = mRT$$
$$m = \frac{p.V}{R.T} \checkmark$$
$$m = \frac{645 \times 10^3 \times 0,65}{518 \times (115 + 237)} \checkmark$$
$$\underline{m = 2,3kg} \checkmark$$ (3)

8.4 Benseen:

$$\Delta V_B = \gamma . V_B . \Delta t$$
$$\Delta V_B = 1,28 \times 10^{-3} \times 0,5 \times (42 - 12) \checkmark$$
$$\underline{\Delta V_B = 0,0192 \ell} \checkmark$$

Glas:

$$\Delta V_g = 3\alpha . V_g . \Delta t$$
$$\Delta V_g = 3 \times 9 \times 10^{-6} \times 0,5 \times (42 - 12) \checkmark$$
$$\underline{\Delta V_g = 405 \times 10^{-6} \ell} \checkmark$$

Oorloopvolume:

$$V = \Delta V_B - \Delta V_G$$
$$V = 0,0192 - 405 \times 10^{-6} \checkmark$$
$$\underline{V = 0,0188 \ell} \checkmark$$

(6)
[14]

TOTAAL AFDELING B: 90
GROOTTOTAAL: 100

Kopiereg voorbehou