higher education & training

Department:
Higher Education and Training
REPUBLIC OF SOUTH AFRICA

T510**(E)**(N21)T

NATIONAL CERTIFICATE

ENGINEERING SCIENCE N2

(15070402)

21 November 2016 (X-Paper)
09:00 – 12:00

This question paper consists of 6 pages, 2 diagram sheets and 1 formula sheet.

Copyright reserved

DEPARTMENT OF HIGHER EDUCATION AND TRAINING
REPUBLIC OF SOUTH AFRICA

NATIONAL CERTIFICATE
ENGINEERING SCIENCE N2
TIME: 3 HOURS
MARKS: 100

INSTRUCTIONS AND INFORMATION

1. Answer ALL the questions.

2. ALL the calculations should consist of at least the following THREE steps:

3. (a)The formula used or the manipulation thereof
   (b)The substitution of the given data in the formula
   (c)The answer together with the correct SI unit

4. Number the answers according to the numbering system used in this question paper.

5. The following values MUST be used in this question paper, whenever applicable:

Gravitational acceleration	= 9,8 m/s²
Atmospheric pressure	= 101,3 kPa
Heat value of petrol	= 25 MJ/kg
Heat value of coal	= 30 MJ/kg
Density of water	= 1 000 kg/m^3
Density of mercury	= 13 534 kg/m^3
Specific heat capacity of water	= 4 187 J/kg °C
Specific heat capacity of steam	= 2 100 J/kg °C
Specific heat capacity of steel	= 500 J/kg °C
Specific heat capacity of copper	= 390 J/kg °C
Specific heat capacity of aluminium	= 900 J/kg °C
Linear coefficient of expansion of steel	= 0,000 012/°C
Linear coefficient of expansion of copper	= 0,000 017/°C
Linear coefficient of expansion of aluminium	= 0,000 023/°C
Resistivity of steel at 20 °C	= 0,000 000 155 Ωm
Resistivity of copper at 20 °C	= 0,000 000 018 Ωm
Resistivity of aluminium at 20 °C	= 0,000 000 028 Ωm

6.
7. Rule off on completion of each question.
8. Drawing instruments MUST be used for all the drawings.
9. Subsections of questions must be kept together.
   Write neatly and legibly.

Copyright reserved

QUESTION 1: DYNAMICS

1.1 Define the following:

1.1.1 Distance (1)

1.1.2 Displacement (1)

1.2 FIGURE 1, DIAGRAM SHEET (attached) shows a car been observed from A to B where it stops. After a certain period of time, it reverses from C to D.

Determine from this graph the following:

1.2.1 What is the time elapsed before reaching B? (1)

1.2.2 The average velocity between A and B of the car? (4)

1.2.3 What is the duration of the car's stopping time? (1)

1.2.4 What is the displacement of the car? From A until the end of the journey. (1)

1.3 Convert 90 km/h to m/s (1)

1.4 The maximum deceleration of a train is 10 m/s. If the train is travelling at 100 km/h

Calculate the following:

1.4.1 The time it takes for the train to come to rest. (2)

1.4.2 The absolute minimum distance needed for the train to stop (2)
[14]

QUESTION 2: STATICS

2.1 FIGURE 2, DIAGRAM SHEET (attached) shows A uniform beam carries point loads or concentrated loads,**L** and **R** are supports.

2.1.1 Determine the reaction on both supports by taking moments about each support (IGNORE THE WEIGHT OF THE BEAM) (6)

2.1.2 Check your answer by using Newton third law of motion that is balancing upward and downward forces (1)

Copyright reserved

2.2 In FIGURE 3 below show an object that is in equilibrium. Determine from FIGURE 3 the following:

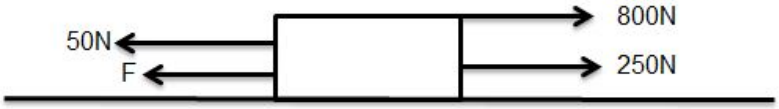

FIGURE 3

2.2.1 The magnitude of force 'F' (2)

2.2.2 What is this force called (1)
[10]

QUESTION 3: ENERGY AND MOMENTUM

3.1 A ball with a mass of 2 kg rests on an incline with an angle of 10°. The ball is to be released to roll down the incline plane, neglecting all friction.

Calculate the following:

3.1.1 The loss in potential energy after it has rolled 12 m (3)

3.1.2 The kinetic energy after it has rolled 12 m (1)

3.1.3 The velocity after it has rolled 12 m (2)

3.1.4 The original height that the ball has rolled from, in order to reach the bottom of the slope at 20 m/s (2)
[8]

QUESTION 4: WORK, POWER AND EFFICIENCY

4.1 A block of bricks with a mass of 1200 kg is lifted up a building at a height of 65 m by means of a chain. The mass of the chain is 4 kg per metre.

Answer the following questions:

4.1.1 Calculate the total weight of the bricks as well as the weight of the chain. (2)

4.1.2 Make neat line label sketch of the force/distance graph with the information given above. (3)

4.1.3 Calculate the work done in winding up the total length of the chain with the block of bricks attached to the end of the cable. (3)

4.1.4 The power applied when the end of the cable is 35 m from the drum and the velocity is 10 m/s (1)
[9]

Copyright reserved

QUESTION 5: MECHANICAL DRIVES AND LIFTING MACHINES

5.1 FIGURE 4, DIAGRAM SHEET (attached) shows compound gear train consists of four gears.

Calculate the following:

5.1.1 The rotational frequency of gear A in r/s (2)

5.1.2 The number of teeth on gear D (2)

5.2 A pulley is driven at 850 r/min by a flat belt moving at a speed of 12 m/s. The tension in the tight side of the belt is 360N and the tension ratio of the tight side to the slack side is 8:3.

Calculate the following:

5.2.1 The tension in the slack side (2)

5.2.2 The effective force of the belt. (1)

5.2.3 The power transmitted by the belt (2)

5.3 A differential pulley block with an efficiency of 68% has a mechanical advantage of 40. The large pulley has 22 number of slots.

Calculate the following:

5.2.1 The load that can be lifted by an effort of 300 N (2)

5.2.2 The displacement ratio of the lifting machine (2)

5.2.3 The number of slots in the smaller pulley (2)
[15]

QUESTION 6: FRICTION

6.1 A body with a mass of 0,015 tonnes rest on an incline of $15°$ with the horizontal, the frictional force between the body and the plane is 65 N

Determine the following:

6.1.1 The weight component parallel with the plane (2)

6.1.2 The weight component perpendicular with the plane (2)

6.1.3 The force required to pull the body down the incline at a constant velocity (2)

6.2 Calculate the absolute pressure in kPa at the bottom of a column of mercury with a height of 400 mm. (3)
[9]

Copyright reserved

QUESTION 7: HEAT

7.1 Define *specific heat capacity of* a substance (1)

7.2 Name ***THREE*** advantages of steam (3)

7.3 9 kg of coal is burned to boil water from 14 ^{0}C to 100 ^{0}C.

Calculate the following:

7.3.1 The heat energy supplied by the coal (2)

7.3.2 The mass of the water if it receives 40% of the heat energy of the coal (4)

7.3.3 Efficiency of the process (1)

7.4 A steel nut is heated to a temperature of $750\,℃$ and was quenched into a container with 790 g of water at $18\,℃$. If the final temperature of the water is $29\,℃$. Calculate the mass of the nut. (4)
[15]

QUESTION 8: PARTICLE STRUCTURE OF MATTER

8.1 Make a neat label sketch of an ATOM and clearly indicate the charge of it (4)

8.2 Define the term electroplating (1)

8.3 State TWO methods of preventing corrosion (2)
[7]

QUESTION 9: ELECTRICITY

9.1 Name THREE factors that influence the resistance of a conductor (3)

9.2 Give TWO examples of insulators (2)

9.3 Give TWO examples of conductors (2)

9.4 Give ONE example where electromagnetic induction is used as an advantage In practice (1)

Copyright reserved

9.5 Refer to FIGURE 5 below and answer the question. (2)

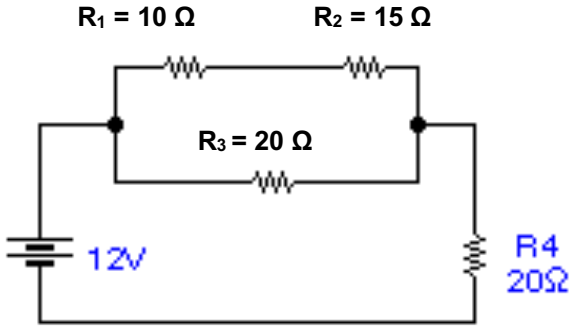

FIGURE 5

9.5.1 The total resistance of the circuit (3)

9.6 Determine the length of an aluminium conductor with a cross-sectional area of 200 mm^2, that has a resistance of 2.1 Ω at 20 ^0C. (3)

[14]

TOTAL: 100

Copyright reserved

DIAGRAM SHEET 1

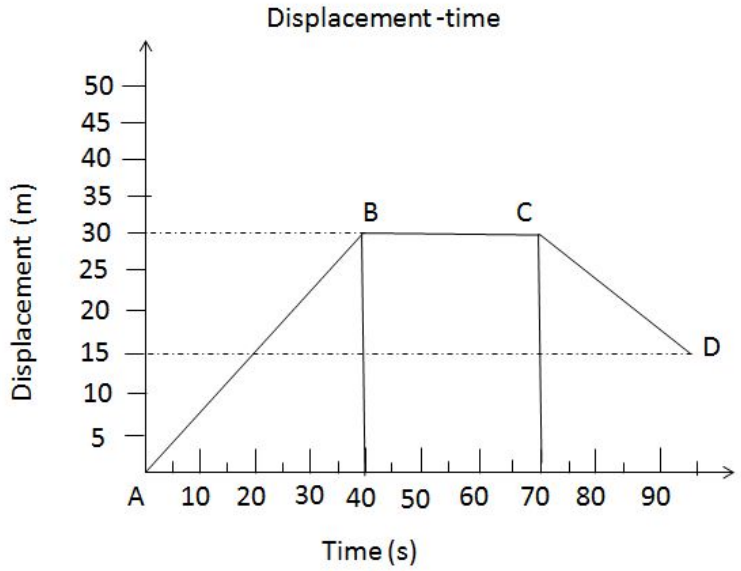

FIGURE 1

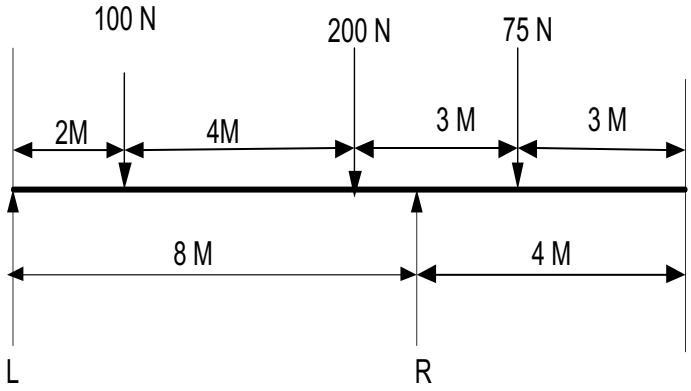

FIGURE 2

DIAGRAM SHEET 2

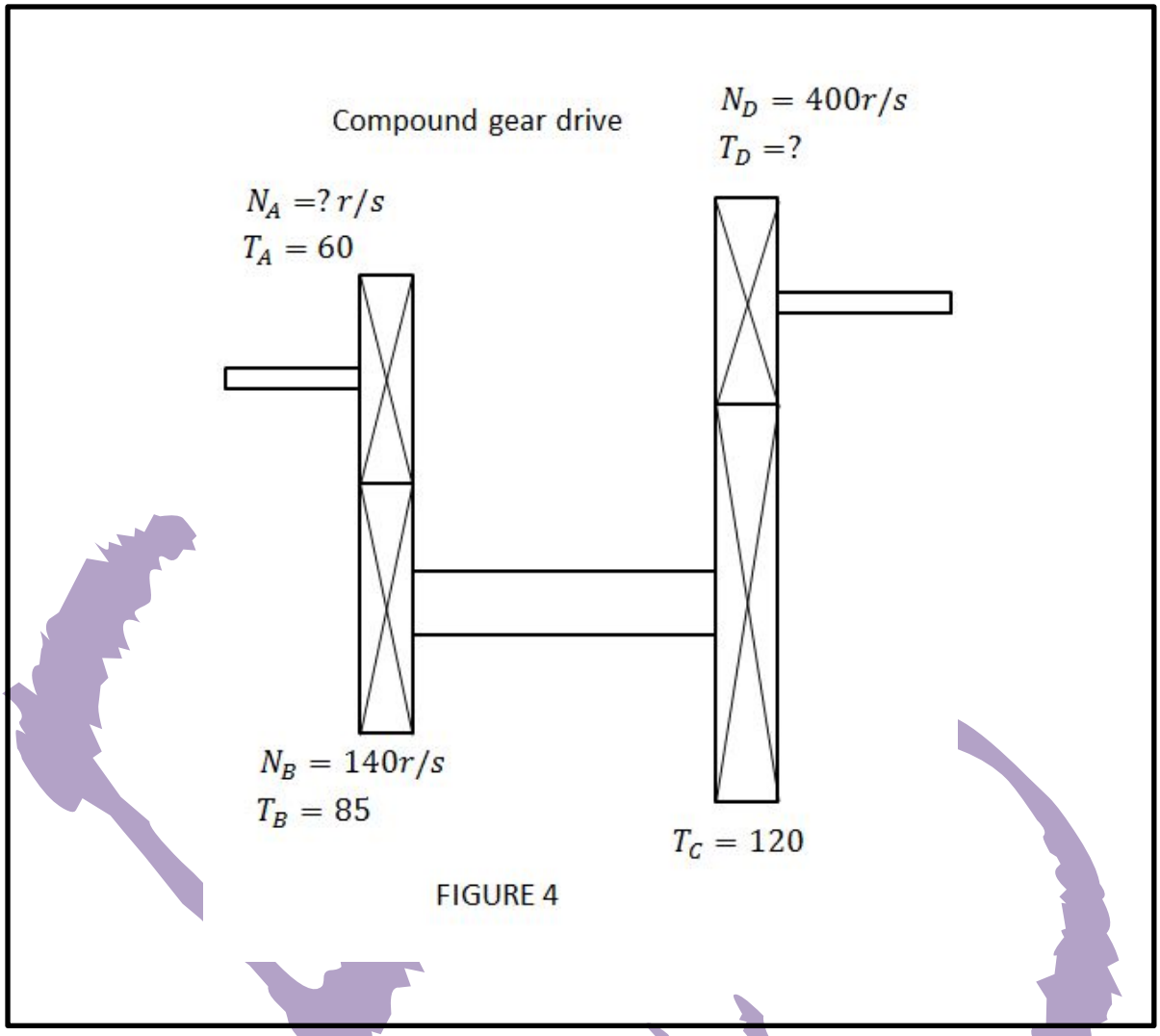

FIGURE 4

Copyright reserved

FORMULA SHEET

All the formulae needed are not necessarily included. Any applicable formula may also be used.

$w = m \,.\, g$

$W = F \,.\, s$

$P = \frac{W}{t}$

$\eta = \frac{Output}{Input} .100\%$

$\eta = \frac{Uitset}{Inset} .100\%$

$\mu = \frac{F_\mu}{N_R}$

$\mu = \tan\Phi$

$F_T = F_\mu \ldots \begin{matrix} horizontal \\ horisontaal \end{matrix} \cdots a = 0$

$F_S = w\sin\theta$

$F_C = w\cos\theta$

$F_T = F_\mu \pm F_S \ldots a = 0$

$F_e = T_1 - T_2$

$\frac{T_1}{T_2} = \begin{matrix} tension\ \ ratio \\ spanningsverhouding \end{matrix}$

$P = F_e \,.\, v$

$v = \pi \,.\, d \,.\, n$

$n = \frac{N}{60}$

$N_A \,.\, T_A = N_B \,.\, T_B$

$SV = \frac{N_A}{N_Z} = VR$

$E_p = m.g.h.$

$E_K = \frac{1}{2} .m.v^2$

$E_T = E_p + E_K$

$HV = \frac{L}{E} = MA$

$VV = \frac{S_E}{S_L} = DR$

$\frac{HV}{VV} .100\% = \eta = \frac{MA}{DR} .100\%$

$VV = \frac{2D}{(d_1 - d_2)} = DR$

$VV = \frac{2D}{(D - d)} = DR$

$Q = m \,.\, c \,.\, \Delta t$

$m.ww = Q = m.hv$

$P = \frac{Q}{t}$

$\Delta l = l_o \,.\, \alpha \,.\, \Delta t$

$l_f = l_o \pm \Delta l$

$1\ m/s = 3{,}6\ km/h$

$s = u.t + \frac{1}{2} .a.t^2$

$v = u + a.t$

$v^2 = u^2 + 2as$

$\Sigma \uparrow F = \Sigma \downarrow F$

$\Sigma \curvearrowleft M = \Sigma \curvearrowright M$

$P_{ABS} = P_{ATM} + P_{MET}$

$p = \Delta.g.h$

$\frac{1}{R_{PAR}} = \frac{1}{R_1} + \frac{1}{R_2} + \ldots + \frac{1}{R_n}$

$R_{SER} = R_1 + R_2 + \ldots + R_n$

$R = \frac{\rho \,.\, l}{a}$

Copyright reserved