higher education & training

Department:
Higher Education and Training
REPUBLIC OF SOUTH AFRICA

T630**(E)**(J31)T

NATIONAL CERTIFICATE

ENGINEERING SCIENCE N2

(15070402)

31 July 2019 (X-Paper)
09:00–12:00

This question paper consists of 7 pages and 1 formula sheet.

Copyright reserved

DEPARTMENT OF HIGHER EDUCATION AND TRAINING
REPUBLIC OF SOUTH AFRICA

NATIONAL CERTIFICATE
ENGINEERING SCIENCE N2
TIME: 3 HOURS
MARKS: 100

INSTRUCTIONS AND INFORMATION

1. Answer ALL the questions.

2. Read ALL the questions carefully.

3. Number the answers according to the numbering system used in this question paper.

4. ALL calculations must consist of at least the following three steps:

   (a) The formula used or the manipulation thereof
   (b) The substitution of the given data in the formula
   (c) The answer together with the correct SI unit

5. Use the following values whenever applicable:

Gravitational acceleration	= 9,8 m/s²
Atmospheric pressure	= 101,3 kPa
Heat value of petrol	= 25 MJ/kg
Heat value of coal	= 30 MJ/kg
Density of water	= 1 000 kg/m3
Specific heat capacity of water	= 4 187 J/kg °C
Specific heat capacity of steam	= 2 100 J/kg °C
Specific heat capacity of steel	= 500 J/kg °C
Specific heat capacity of copper	= 390 J/kg °C
Specific heat capacity of aluminium	= 900 J/kg °C
Linear coefficient expansion of steel	= 0,000 012/°C
Linear coefficient expansion of copper	= 0,000 017/°C
Linear coefficient expansion of aluminium	= 0,000 023/°C
Resistivity of steel at 20 °C	= 0,000 000 155 Ωm
Resistivity of copper at 20 °C	= 0,000 000 018 Ωm
Resistivity of aluminium at 20 °C	= 0,000 000 028 Ωm

6. Rule off on completion of each question.

7. Use drawing instruments for all drawings.

8. Keep subsections of questions together.

9. Write neatly and legibly.

Copyright reserved

QUESTION 1: DYNAMICS

1.1 Define *distance.* (2)

1.2 Choose the correct word from those given in brackets. Write only the word next to the question number (1.2) in the ANSWER BOOK and motivate your answer.

Velocity is a (scalar/vector). (2)

1.3 A vehicle is spotted moving at a constant velocity of 20 m/s for 15 seconds and then stops within 15 seconds at constant deceleration. The movement takes place in a straight line.

Draw a neat sketch of the velocity/time graph showing the movement of the vehicle until it stops. (4)

1.4 Use the information in QUESTION 1.3 and determine the following from the graph:

1.4.1 The deceleration of the vehicle (2)

1.4.2 The total displacement of the vehicle using the graph. (3)

1.4.3 The average velocity of the vehicle (2)

[15]

QUESTION 2: STATICS

2.1 A light horizontal beam is 10 m long and is loaded as shown in figure 1.

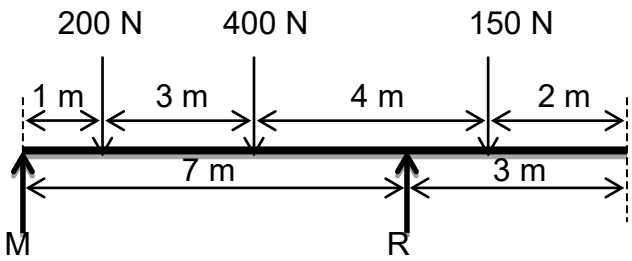

Figure 1

2.1.1 Ignore the weight of the beam and calculate the reaction R of the beam. (3)

2.1.2 Ignore the weight of the beam and calculate reaction M of the beam by taking moments about support R. (3)

2.1.3 Check your answers. (1)

Copyright reserved

2.2 Define the term couple. (2)

2.3 Give one example of couples. (1)
[10]

QUESTION 3: ENERGY AND MOMENTUM

3.1 State the law of conservation of energy. (2)

3.2 A coconut picker with a mass of 50 kg climbs up a 12 m high coconut palm tree. After picking the coconuts, he slides down the trunk at a constant velocity of 3 m/s (Ignore the weight of the coconuts).

3.2.1 Calculate the potential energy of the coconut picker at 12m above the ground. (2)

3.2.2 Calculate the kinetic energy (2)

3.2.3 Calculate the momentum of the coconut picker. (1)
[7]

QUESTION 4: WORK, POWER AND EFFICIENCY

4.1 A machine with a weight of 1 600 N is lifted vertically up a building 14m high by means of a chain wounded onto a drum. The weight of the chain is 40 N/m and is 14m long.

4.1.1 Use the information given above and make a neat, fully labelled sketch of the force versus distance graph.

4.1.2 Calculate the work done in hoisting the machine up the total length of the chain with the machine attached to the end of the chain.
(2 × 3) (6)

4.2 A rear tractor wheel has a diameter of 1 200 mm and transmits a torque of 1 200 N.m.

4.2.1 Calculate the turning force at the circumference of the wheel assuming power is transmitted through this wheel.

4.2.2 Calculate the work done in turning the wheel through one revolution. (4)
(2 × 2) **[10]**

Copyright reserved

QUESTION 5: MECHANICAL DRIVES AND LIFTING MACHINES

5.1 Give two advantages of chain drives over belt drives. (2)

5.2 A flat belt drive has an effective tension force of 350 N. The belt has a linear velocity of 15 m/s. The driver pulley has a diameter of 100 mm, and the driven pulley has a diameter of 500 mm with a slack side force of 210 N.

Calculate the following:

5.2.1 Power transmitted by the belt drive.

5.2.2 Rotational frequency of the driven pulley

5.2.3 Rotational frequency of the driver pulley

(3 × 2) (6)

5.3 A crane has an effort of 9 kN. It lifts a load of 15 kN with an effort distance of 2,4 m and a load distance of 750 mm.

Calculate the following:

5.3.1 Mechanical advantage of the crane

5.3.2 Velocity ratio

(2 × 2) (4)

5.4 Define Pascal's law. (2)

5.5 A diver has equipment that can only withstand 350 kPa of gauge pressure.

Determine the maximum depth that this driver and his equipment may dive in seawater while ensuring the protection of his/her equipment. The density of seawater is 1 025 kg/m^3 (3)

[17]

Copyright reserved

QUESTION 6: FRICTION

6.1 Which friction opposes the initial movement of a body or object? (1)

6.2 A box of 10 kg is placed on an incline plane. A muscleman applied an unknown force to pull the box up the incline. The box experienced a frictional force of 10 N and the angle between the horizontal surface and the plane is 60°.

Calculate the following:

6.2.1 Weight component parallel to the plane

6.2.2 Weight component perpendicular to the plane

6.2.3 Unknown force required to pull the box up the incline

6.2.4 Coefficient of friction

(4 × 2) (8)
[9]

QUESTION 7: HEAT

7.1 Name three forms of combustibles and give one example of each. (6)

7.2 A petrol backup generator used at the hospital took over for 2 hours during load shedding and used 20 kg of petrol. Assume 35% of heat energy was lost due to incomplete combustion.

Calculate the following:

7.2.1 Amount of heat released by the petrol (3)

7.2.2 Power output of the fuel. (2)
[11]

QUESTION 8: PARTICLE STRUCTURE OF MATTER

8.1 Define the term atom. (1)

8.2 Draw a fully labelled structure of an atom and give the polarity of each constituency. (6)

8.3 Give one practical use of electrolytes. (1)
[8]

Copyright reserved

QUESTION 9: ELECTRICITY

9.1 Three resistors are connected to a 12 V supply as shown in Figure2 below. $R_1 = 3\ \Omega$, $R_2 = 2\ \Omega$ and $R_3 = 2\ \Omega$.

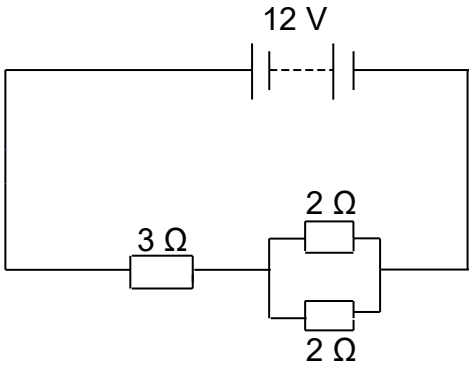

FIGURE 1

Ignore the internal resistance and the resistance of the conductors and calculate the following:

9.1.1 Total current flowing through the circuit (4)

9.1.2 Voltage drop across the parallel circuit (2)

9.2 Refer to the resistance and current of the circuit and explain what will happen to the total current of the circuit if another resistor is connected in parallel to the 3 Ω resistor. (3)

9.3 Define the term self-induction. (2)

9.4 Name two applications of mutual induction. (2)
[13]

TOTAL: 100

Copyright reserved

ENGINEERING SCIENCE N2

FORMULA SHEET

All the formulae needed are not necessarily included. Any applicable formula may be used.

$w = m.g$

$W = F.s$

$P = \frac{W}{t}$

$\eta = \frac{Output}{Input}.100\%$

$\mu = \frac{F_\mu}{N_R}$

$\mu = \tan\Phi$

$F_T = F_\mu \ldots \frac{horizontal}{horisontaal} \cdots a = 0$

$F_S = w\sin\theta$

$F_C = w\cos\theta$

$F_T = F_\mu \pm F_S \ldots a = 0$

$F_e = T_1 - T_2$

$\frac{T_1}{T_2} = \frac{tension\ \ ratio}{spanningsverhouding}$

$P = F_e \,.\, v$

$v = \pi \,.\, d \,.\, n$

$n = \frac{N}{60}$

$N_A \,.\, T_A = N_B \,.\, T_B$

$SV = \frac{N_A}{N_Z} = VR$

$E_p = m.g.h.$

$E_K = \frac{1}{2}.m.v^2$

$E_T = E_p + E_K$

$HV = \frac{L}{E} = MA$

$VV = \frac{S_E}{S_L} = DR$

$\frac{HV}{VV}.100\% = \eta = \frac{MA}{DR}.100\%$

$VV = \frac{2D}{(d_1 - d_2)} = DR$

$VV = \frac{2D}{(D - d)} = DR$

$Q = m.c.\Delta t$

$m.ww = Q = m.hv$

$P = \frac{Q}{t}$

$\Delta l = l_o \,.\, \alpha \,.\, \Delta t$

$l_f = l_o \pm \Delta l$

1 m/s = 3,6 km/h

$s = u.t + \frac{1}{2}.a.t^2$

$v = u + a.t$

$v^2 = u^2 + 2as$

$\Sigma \uparrow F = \Sigma \downarrow F$

$\Sigma \curvearrowright M = \Sigma \curvearrowleft M$

$P_{ABS} = P_{ATM} + P_{MET}$

$p = \Delta.g.h$

$\frac{1}{R_{PAR}} = \frac{1}{R_1} + \frac{1}{R_2} + \ldots + \frac{1}{R_n}$

$R_{SER} = R_1 + R_2 + \ldots + R_n$

$R = \frac{\rho \,.\, l}{a}$

Copyright reserved