higher education & training

Department:
Higher Education and Training
REPUBLIC OF SOUTH AFRICA

T580(E)(A7)T

APRIL EXAMINATION

NATIONAL CERTIFICATE

ENGINEERING SCIENCE N2

(15070402)

7 April 2015 (Y-Paper)
13:00–16:00

This question paper consists of 8 pages and 1 formula sheet.

ENGINEERING

Copyright reserved

DEPARTMENT OF HIGHER EDUCATION AND TRAINING
REPUBLIC OF SOUTH AFRICA

NATIONAL CERTIFICATE
ENGINEERING SCIENCE N2
TIME: 3 HOURS
MARKS: 100

INSTRUCTIONS AND INFORMATION

1. Answer ALL the questions.

2. ALL the calculations should consist of at least the following THREE steps:

3. (a)The formula used or the manipulation thereof
   (b)The substitution of the given data in the formula
   (c)The answer together with the correct SI unit

4. Number the answers according to the numbering system used in this question paper.

5. The following values MUST be used in this question paper, whenever applicable:

Gravitational acceleration	= 9,8 m/s²
Atmospheric pressure	= 101,3 kPa
Heat value of petrol	= 25 MJ/kg
Heat value of coal	= 30 MJ/kg
Density of water	= 1 000 kg/m3
Specific heat capacity of water	= 4 187 J/kg °C
Specific heat capacity of steam	= 2 100 J/kg °C
Specific heat capacity of steel	= 500 J/kg °C
Specific heat capacity of copper	= 390 J/kg °C
Specific heat capacity of aluminium	= 900 J/kg °C
Linear coefficient of expansion of steel	= 0,000 012/°C
Linear coefficient of expansion of copper	= 0,000 017/°C
Linear coefficient of expansion of aluminium	= 0,000 023/°C
Resistivity of steel at 20 °C	= 0,000 000 155 Ωm
Resistivity of copper at 20 °C	= 0,000 000 018 Ωm
Resistivity of aluminium at 20 °C	= 0,000 000 028 Ωm

6. Rule off on completion of each question.
7. Drawing instruments MUST be used for all the drawings.
8. Subsections of questions must be kept together.
9. Write neatly and legibly.

Copyright reserved

QUESTION 1: DYNAMICS

1.1 A bus moves from A to B on the route as shown on FIGURE 1 below. The journey takes 5 hours and 30 minutes.

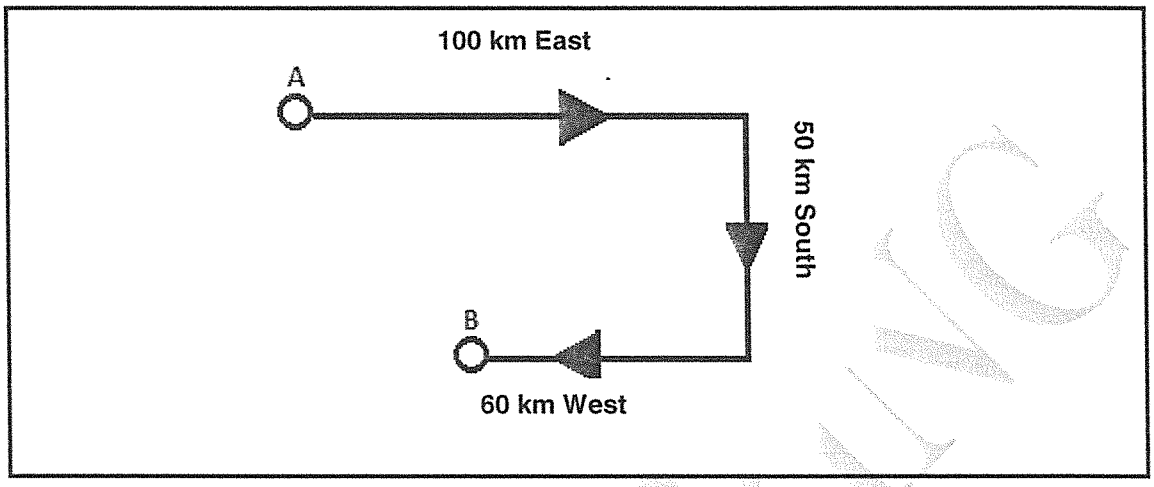

FIGURE 1

Calculate the following:

1.1.1 The distance travelled from A to B (1)

1.1.2 The displacement from A to B (Graphical method is excluded) (3)

1.1.3 The average speed from A to B (2)

1.1.4 The average velocity from A to B (2)

1.2 The maximum deceleration of a motorcar is 15 m/s^2. The motorcar is travelling at 120 km/h.

Calculate the following:

1.2.1 The time it takes for the motorcar to come to rest (2)

1.2.2 The absolute minimum distance needed for the motorcar to stop (2)

1.3 Explain the difference between *velocity* and *acceleration*. (3)
[15]

ENGINEERING

QUESTION 2: STATICS

2.1 Define the *resultant of a system of forces*. (2)

2.2 The horizontal beam shown in FIGURE 2 below rests on two supports L and R and is loaded as shown. Ignore the weight of the beam.

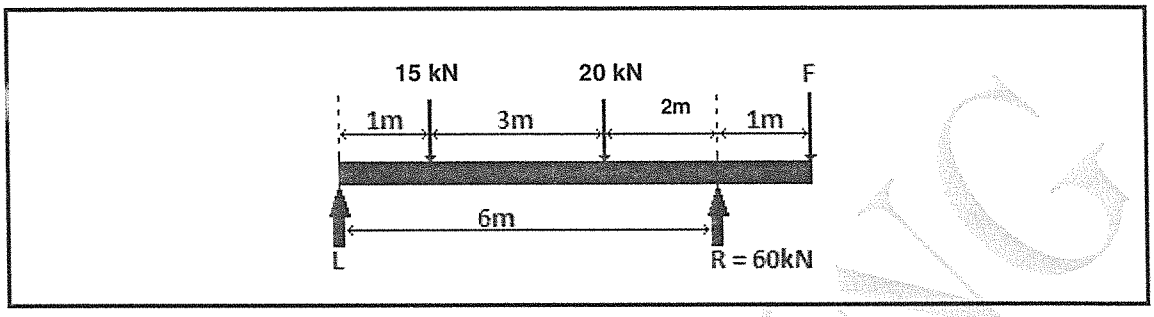

FIGURE 2

Determine the following:

2.2.1 The value of the unknown force F resting on the beam (3)

2.2.2 The value of the unknown reaction L (2)

2.3 Calculate the magnitude and direction of the equilibrant of the system of forces shown in FIGURE 3 below. (3)

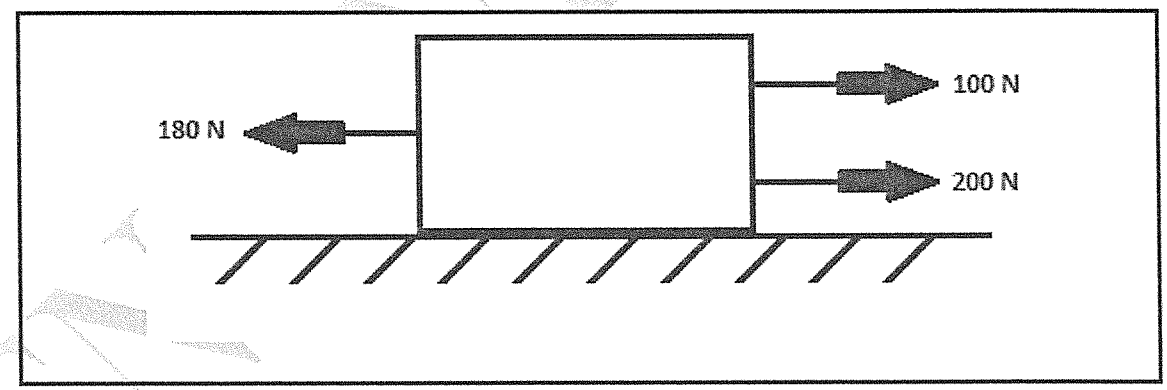

[10]

FIGURE 3

ENGINEERING

QUESTION 3: ENERGY AND MOMENTUM

3.1 Explain the difference between *potential energy* and *kinetic energy*. (2)

3.2 A ball is thrown vertically upwards and reaches the ground once again after 7 seconds.

Calculate the following:

3.2.1 The height which the ball reaches (2)

3.2.2 The total distance covered by the ball (1)

3.3 Calculate the potential energy of a motorcar of 1 000 kg that is standing on top of an incline of 15°. The length of the incline is 210 m long. (3)

3.4 A stone with a mass of 270 g travels at a velocity of 180 m/s.

Calculate the following:

3.4.1 The kinetic energy of the stone (2)

3.4.2 The momentum of the stone (2)
[12]

QUESTION 4: WORK, POWER AND EFFICIENCY

4.1 Define the concept of *power*. (2)

4.2 A tractor applies a 9 500 N force over a distance of 90 m.

4.2.1 Draw a force/distance graph. (2)

4.2.2 Calculate the work done. (2)

4.3 Calculate the power required if a load of 2 000 kg is lifted 20 m high in a time of 40 seconds. (3)
[9]

ENGINEERING

QUESTION 5: MECHANICAL DRIVES AND LIFTING MACHINES

5.1 State TWO advantages of gear drives. (2)

5.2 The compound gear train in FIGURE 4 below consists of four gears. Gear A has 60 teeth.

Calculate the following:

5.2.1 The rotational frequency of gear A in r/s (2)

5.2.2 The number of teeth on gear D if gear D is rotating at 340 r/s (2)

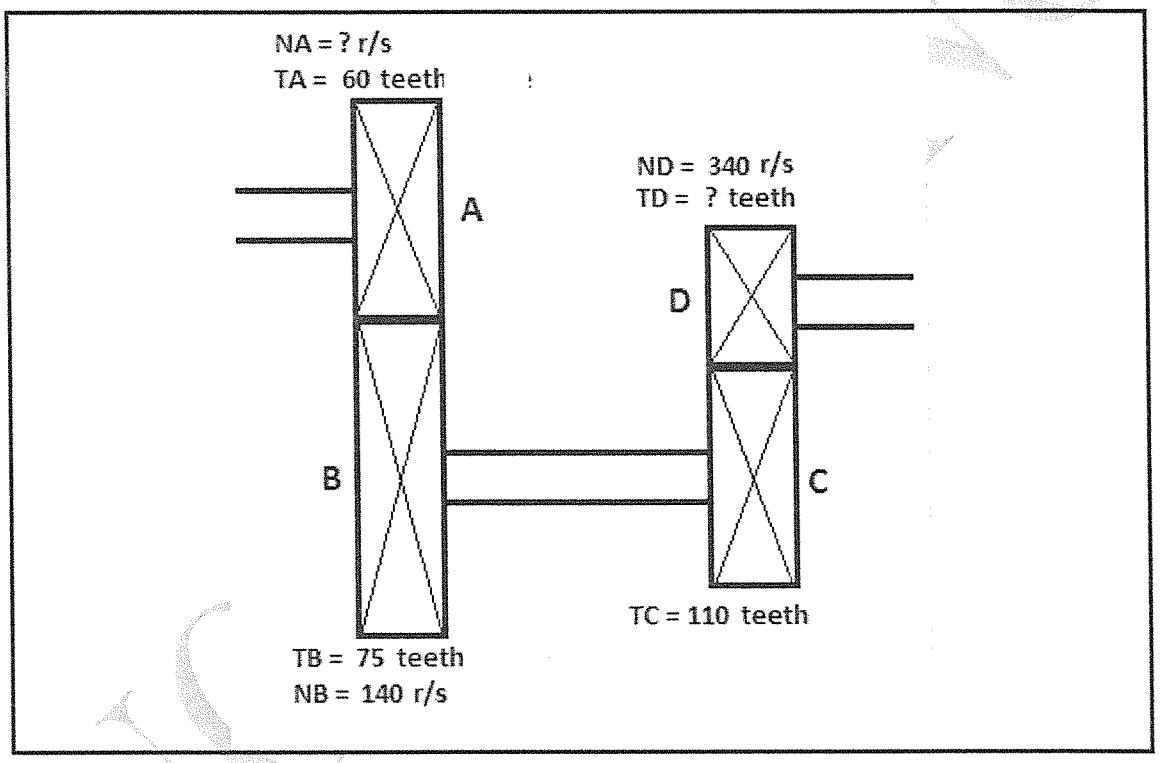

FIGURE 4

5.3 The ratio of the force of the tight side to the force in the slack side of a drive belt is 4:1. The force in the tight side is 600 N. The belt's velocity is 20 m/s.

Calculate the following:

5.3.1 The force in the slack side (2)

5.3.2 The effective force (1)

5.3.3 The power transmitted (2)

[11]

Copyright reserved

QUESTION 6: FRICTION

6.1 A body with a mass of 70 kg is sliding down by itself without any external force on an incline with an angle of 34° to the horizontal. The coefficient of friction between the body and the sliding surface is 0, 27.

Calculate the following:

6.1.1 The weight component perpendicular to the sliding plane (2)

6.1.2 The weight component parallel to the sliding plane (2)

6.1.3 The frictional force (2)

6.1.4 The external force required to hold the body stationary on the inclined plane (2)

6.2 Indicate whether the following statements are TRUE or FALSE. Choose the answer and write only 'true' or 'false' next to the question number (6.2.1–6.2.3) in the ANSWER BOOK.

6.2.1 Kinetic friction is larger than static friction. (1)

6.2.2 Friction is dependent on the area of contact between surfaces. (1)

6.2.3 Friction is dependent on the sliding speed. (1)
[11]

QUESTION 7: HEAT

7.1 Explain what is understood by the '*heat value*' of a substance. (2)

7.2 A steel block with a mass of 5 000 kg is heated from 10 °C to 200 °C by burning 50 kg of coal.

Calculate the following:

7.2.1 The heat energy released by the coal in MJ (2)

7.2.2 The heat energy gained by the steel block in MJ (2)

7.2.3 The efficiency of the heat transfer process (2)

7.3 Define *specific heat capacity* of a substance. (2)

7.4 A steel nut is red hot at 750 °C and is cooled in a container with 790 g of water at 18 °C.

If the final temperature of the water is 29 °C, calculate the mass of the nut. (3)

7.5 A piece of copper wire of 29 m at 3 °C was heated to 52 °C during an experiment.

Calculate its new length. (2)
[15]

ENGINEERING

Copyright reserved

QUESTION 8: PARTICLE STRUCTURE OF MATTER

8.1 Atoms consist of a nucleus that contains two components.
Name these TWO components. (2)

8.2 In chemistry there are TWO types of electrodes in cells or batteries.
Name these TWO types of electrodes. (2)

8.3 State TWO uses of electrolysis. (2)

8.4 What is an *electrolyte*? (1)
[7]

QUESTION 9: ELECTRICITY

9.1 Explain what is meant when a substance is referred to as a bad conductor of electricity and give ONE example. (2)

9.2 THREE equal resistors are connected in parallel. The total resistance of the circuit is 2,5 Ω.

Calculate the resistance of each resistor. (3)

9.3 Give ONE example where electromagnetic induction is used in practice. (1)

9.4 Calculate the resistivity of a conductor 10 km long with a resistance of 20 Ω and a diameter of 10 mm. (4)
[10]

TOTAL: 100

ENGINEERING

Copyright reserved

FORMULA SHEET

All the formulae needed are not necessarily included.
Any applicable formula may also be used.

$$w = m \,.\, g$$

$$W = F \,.\, s$$

$$P = \frac{W}{t}$$

$$\eta = \frac{Output}{Input} .100\%$$

$$\eta = \frac{Uitset}{Inset} .100\%$$

$$\mu = \frac{F_\mu}{N_R}$$

$$\mu = \tan\Phi$$

$$F_T = F_\mu \ldots \begin{matrix} horizontal \\ horisontaal \end{matrix} \ldots a = 0$$

$$F_S = w\sin\theta$$

$$F_C = w\cos\theta$$

$$F_T = F_\mu \pm F_S \ldots a = 0$$

$$F_e = T_1 - T_2$$

$$\frac{T_1}{T_2} = \begin{matrix} tension\ \ ratio \\ spanningsverhouding \end{matrix}$$

$$P = F_e \,.\, v$$

$$v = \pi \,.\, d \,.\, n$$

$$n = \frac{N}{60}$$

$$N_A \,.\, T_A = N_B \,.\, T_B$$

$$SV = \frac{N_A}{N_Z} = VR$$

$$E_p = m.g.h.$$

$$E_K = \frac{1}{2} .m.v^2$$

$$E_T = E_p + E_K$$

$$HV = \frac{L}{E} = MA$$

$$VV = \frac{S_E}{S_L} = DR$$

$$\frac{HV}{VV} .100\% = \eta = \frac{MA}{DR} .100\%$$

$$VV = \frac{2D}{(d_1 - d_2)} = DR$$

$$VV = \frac{2D}{(D - d)} = DR$$

$$Q = m \,.\, c \,.\, \Delta t$$

$$m.ww = Q = m.hv$$

$$P = \frac{Q}{t}$$

$$\Delta l = l_o \,.\, \alpha \,.\, \Delta t$$

$$l_f = l_o \pm \Delta l$$

$$1\ m/s = 3{,}6\ km/h$$

$$s = u.t + \frac{1}{2} .a.t^2$$

$$v = u + a.t$$

$$v^2 = u^2 + 2as$$

$$\Sigma \uparrow F = \Sigma \downarrow F$$

$$\Sigma \curvearrowright M = \Sigma \curvearrowleft M$$

$$P_{ABS} = P_{ATM} + P_{MET}$$

$$p = \Delta.g.h$$

$$\frac{1}{R_{PAR}} = \frac{1}{R_1} + \frac{1}{R_2} + \ldots + \frac{1}{R_n}$$

$$R_{SER} = R_1 + R_2 + \ldots + R_n$$

$$R = \frac{\rho \,.\, l}{a}$$

ENGINEERING

Copyright reserved

higher education & training

Department:
Higher Education and Training
REPUBLIC OF SOUTH AFRICA

MARKING GUIDELINE

NATIONAL CERTIFICATE

APRIL EXAMINATION

ENGINEERING SCIENCE N2

7 APRIL 2015

This marking guideline consists of 9 pages.

Copyright reserved

QUESTION 1

1.1 1.1.1 Distance= 100+50+60
=210km ✓ (1)

1.1.2 Displacement
$a^2 = b^2 + c^2$ ✓

$a = \sqrt{50^2 + 40^2}$ ✓

a = 64, 031km ✓ (3)

1.1.3 Speed

V = s/t

$= \frac{210}{5,5}$ ✓

= 38,1818km / hr

= 10,606 m / s ✓ (2)

1.1.4 Velocity

V = s/t

$= \frac{64, 031}{5,5}$ ✓

= 11, 642 km /h

= 3, 2328 m/s ✓ (2)

1.2 1.2.1 Time to come to rest

$t = \frac{v - u}{a}$

$= \frac{0 - 33,33}{-15}$ ✓

= 2, 222 s ✓ (2)

Copyright reserved

1.2.2 $S = ut + \frac{1}{2}at^2$

$= 33{,}33 \times 2{,}222 + \frac{1}{2}(-15)(2, 222)^2$ ✓

$= 37, 0296$ m ✓

OR

$S = \frac{v^2 - u^2}{2a}$

$= \frac{(0)^2 + (33{,}33)^2}{2(-15)}$ (2)

$= 37{,}02963$ m

1.3 Velocity is speed in given direction✓ or rate of change in displacement ✓while acceleration is the rate of change of velocity. ✓

(3)
[15]

QUESTION 2

2.1 A single force that replaces a system of forces✓ and still has the same effect as the forces acting together.✓ (2)

2.2 2.2.1 Take moments about L

$\sum cwm = \sum Acwm$

$60(6) = 15(1) + 20(4) + F(7)$ ✓

$360 = 15 + 80\ 7(F)$ ✓

$F = 37, 857$ kN ✓ (3)

2.2.2 Reaction L

$\sum F = \sum F$

$L + R = 15 + 20 + 37, 857$

$L + 60 = 72, 857$ ✓

$L = 12, 857$ kN ✓ (2)

Copyright reserved

2.3 Equilibrant
E = 300 – 180
= 120 N WEST / LEFT (3)
[10]

QUESTION 3

3.1 Potential energy is the energy a body possesses due to its mass and height✓
and kinetic energy is energy a body possesses due to its mass and velocity.✓ (2)

3.2 3.2.1 $V = u + gt$

$0 = u + (-9,8)\ 3,5$

$U = 34,3$ m/s

$S = ut + ½\ at^2$

$S = 34,3\ (3,5) + ½\ (-9,8)\ 3,5^2$ ✓

$S = 60,025$ m ✓

OR

$V^2 = U^2 + 2as$

$0^2 = 34,3^2 + 2\ (-9,8)\ S$

$S = 60,025$ m (2)

3.2.2 S Total = S up + S down

= 60, 025 + 60, 025

= 120, 05 m ✓ (1)

3.3 h = 210 x Sin 15°

= 54, 352 m ✓

Ep = m x g x h

Ep = 1000 x 9,8 x 54, 352 ✓

Ep = 532649, 6 J ✓

(3)

Copyright reserved

3.4 3.4.1 $Ek = ½ mv^2$

$Ek = ½ \times 0,27 \times 180^2$ ✓

$Ek = 4374$ J ✓ (2)

3.4.2 $P = m \times v$

$= 0,27 \times 180$ ✓

$= 48,6$ kg m/s ✓ (2)
[12]

QUESTION 4

4.1 Rate at which work is done ✓per second. ✓ (2)

4.2 4.2.1 Force / Distance

(2)

Force / Distance Graph

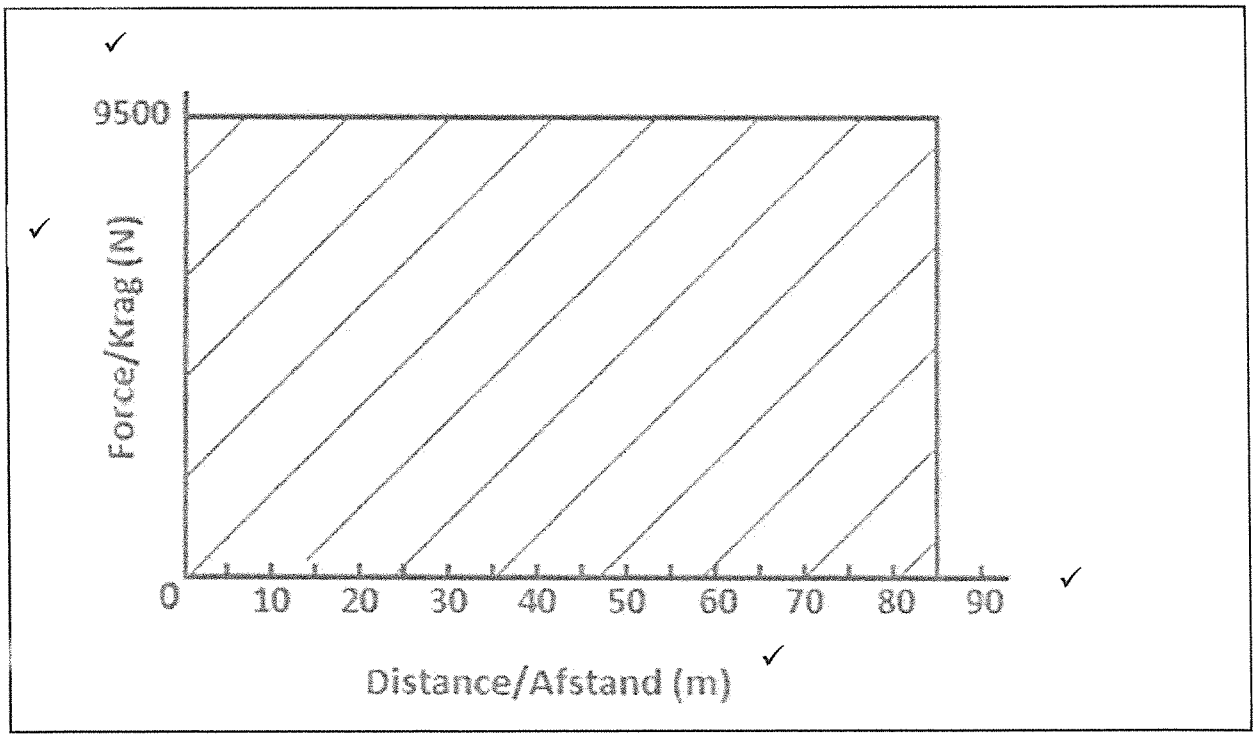

4.2.2 $WD = F \times S$

$= 9500 \times 90$ ✓

$= 855\,000$ J or 855 kJ ✓ (2)

4.3 $Po = \frac{F \times S}{t}$

$= \frac{(2\,000 \times 9{,}8) \times 20}{40}$ ✓ ✓

$= 9\,800$ W ✓ (3)

[9]

QUESTION 5

5.1
- Use smaller space ✓
- More torque (power) ✓
- Less maintenance
- No slip

any two (2)

5.2 5.2.1 $TA \times NA = TB \times NB$

$60 \times NA = 75 \times 140$ ✓

$NA = 175$ r/s ✓ (2)

5.2.2 $Tc \times Nc = ND \times TD$ $N_8 = Nc = 140$

$110 \times 140 = TD \times 340$ ✓

To = 45, 29 T use To = 45 T ✓ (2)

5.3 5.3.1 $T1 = 4T2$

$600 = 4 \times T2$ ✓

$T2 = 150$ N ✓ (2)

5.3.2 $Fe = T1 - T2$

$= 600 - 150$

$= 450$ N ✓ (1)

5.3.3 $Po = Fe \times V$

450×20 ✓

$= 9\,000$ W ✓ (2)

[11]

Copyright reserved

QUESTION 6

6.1 6.1.1 $Fc = m.g.Cos\ \theta$

$= 70 \times 9,8 \times Cos\ 34° \checkmark$

$= 568, 719\ N \checkmark$ (2)

6.1.2 $Fs = mg\ Sin\ \theta$

$= 70 \times 9,8 \times Sin\ 34° \checkmark$

$= 383, 6\ N \checkmark$ (2)

6.1.3 $F\mu = \mu (NR)$

$= 0, 27\ X\ 568, 719 \checkmark$

$= 153, 554\ N \checkmark$ (2)

6.1.4 $F + F\mu = F\ S$

$F = F\ S - F\ \mu$

$= 383, 6 - 153, 554 \checkmark$

$= 230, 046\ N \checkmark$ (2)

6.2 6.2.1 False ✓ (1)

6.2.2 True ✓ (1)

6.2.3 False ✓ (1)
[11]

QUESTION 7

7.1 Amount of heat energy released✓ when 1 kg of a fuel is completely burnt. ✓ (2)

7.2 7.2.1 $Q = m \times HV$

$= 50 \times 30 \checkmark$

$= 1500\ MJ \checkmark$ (2)

Copyright reserved

7.2.2 $\Delta t = T_2 - T_1$

$= 200 - 10$

$= 190$

$Q = m \times c \times \Delta t$

$= 50 \times 500 \times 190$

$= 4750\ 000\ J$

$= 4,75\ MJ$ (2)

7.2.3 $\eta\ \% = \frac{\text{output}}{\text{Input}} \times \frac{100}{1}$

$= \frac{475}{1500} \times 100$

$= 0,32\%$ (2)

7.3 The amount of heat energy required to heat 1 kg✓ of a substance by 1 °C.✓ (2)

7.4 Heat lost steel nut = Heat gained (water)
$m \times c \times \Delta t = m \times c \times \Delta t$
$ms \times 500 \times 721$ ✓ $= 0,79 \times 4\ 187 \times 11$ ✓
$ms = 0,1$ kg ✓ (3)

7.5 Final length

$\Delta L = Lo \times \propto \times \Delta t$
$\Delta L = 29\ 000 \times 0,000017 \times 49$
$\Delta L = 24,157$ mm
$= 0,024157$ m

$LF = Lo + \Delta L$
$= 29000 + 24,157$ ✓ $= 29\ m + 0,024157\ m$
$= 29024,157$ mm ✓ $= 29,024\ m$ (2)
[15]

QUESTION 8

8.1
- Neutron ✓
- Proton ✓ (2)

8.2
- Cathode - Negative (-) ✓
- Anode - Positive (+) ✓ (2)

Copyright reserved

8.3 • Electroplating ✓
• Electrorefining ✓ (2)

8.4 An electrolyte is a solution that is able to conduct electric current ✓ (1) [7]

QUESTION 9

9.1 Material has a high resistance to electron flow,✓ e.g. wood ✓ (any relevant answer) (2)

9.2 Resistance of one resistor

$$\frac{1}{Rp} = \frac{1}{R1} + \frac{1}{R2} + \frac{1}{R3}$$

$$\frac{1}{Rp} = \frac{1}{R1} + \frac{1}{R1} + \frac{1}{R1} \checkmark$$

$$\frac{1}{5} = \frac{1+1+1}{R1}$$

R1 = 3 x 2,5 ✓
R1 = 7,5 Ω ✓ (3)

9.3 • Generate ignition spark ✓
• Transformers
• Generators (Any 1 x 1) (1)

9.4 Calculate resistivity

$A = \frac{\pi}{4} d^2$

$= \frac{\pi}{4} 0,01^2$

$= 78,539 \times 10^{-6} m^2$ ✓

OR

$A = \pi r^2$

$= \pi (0,005)^2$

$= 7,8539 \times 10^{-5} m^2$

$R = \frac{p \times l}{A}$

$P = \frac{R \times A}{L}$

$P = \frac{20 \times 78,539 \times 10^{-6}}{10\,000}$ ✓

$= 0,157078 \times 10^{-6}$

$= 1,5708 \times 10^{-7}\ \Omega m$ ✓ (4) [10]

TOTAL: 100

Copyright reserved