201304T119

higher education & training

Department:
Higher Education and Training
REPUBLIC OF SOUTH AFRICA

T600(E)(A4)T
**APRIL EXAMINATION**

# NATIONAL CERTIFICATE

# ENGINEERING SCIENCE N2

(15070402)

**4 April 2013 (X-Paper)**
**09:00–12:00**

**This question paper consists of 8 pages and a 1-page formula sheet.**

Copyright reserved

# DEPARTMENT OF HIGHER EDUCATION AND TRAINING
# REPUBLIC OF SOUTH AFRICA

NATIONAL CERTIFICATE
ENGINEERING SCIENCE N2
TIME: 3 HOURS
MARKS: 100

---

## INSTRUCTIONS AND INFORMATION

1. Answer ALL the questions.
2. Read ALL the questions carefully.
3. Number the answers according to the numbering system used in this question paper.
4. ALL the calculations should consist of at least the following THREE steps:

   4.1 The formula used or the manipulation thereof
   4.2 The substitution of the given data in the formula
   4.3 The answer together with the correct SI unit

5. The following values MUST be used in this question paper where applicable:

| | |
|---|---|
| Gravitational acceleration | = 9,8 $m/s^2$ |
| Atmospheric pressure | = 101,3 kPa |
| Heat value of petrol | = 25 MJ/kg |
| Heat value of coal | = 30 MJ/kg |
| Density of water | = 1 000 $kg/m^3$ |
| Specific heat capacity of water | = 4 187J/kg°C |
| Specific heat capacity of steam | = 2 100 J/kg°C |
| Specific heat capacity of steel | = 500 J/kg°C |
| Specific heat capacity of copper | = 390 J/kg°C |
| Specific heat capacity of aluminium | = 900 J/kg°C |
| Linear coefficient of expansion of steel | = 0,000 012/°C |
| Linear coefficient of expansion of copper | = 0,000 017/°C |
| Linear coefficient of expansion of aluminium: | = 0,000 023/°C |
| Resistivity of steel at 20 °C | = 0,000 000 155 Ω.m |
| Resistivity of copper at 20 °C | = 0,000 000 018 Ω.m |
| Resistivity of aluminium at 20 °C | = 0,000 000 028 Ω.m |

6. Drawing instruments MUST be used for ALL the drawings.
7. Keep questions and subsections of questions together.
8. Rule off on completion of each question.
9. Marks indicate percentages.
10. Write neatly and legibly.

---

Copyright reserved 

## QUESTION 1

1.1 Convert the following:

1.1.1 40 km/h to m/s

1.1.2 127 centimetres to metres

1.1.3 1,2 gigapascal to megapascal

(3 × 1) (3)

1.2 FIGURE 1 below shows a graph that shows the velocity of a vehicle with respect to time as the vehicle moves at 16 m/s for 20 seconds and then accelerates to 23 m/s over the next 10 seconds. Movement takes place in a straight line.

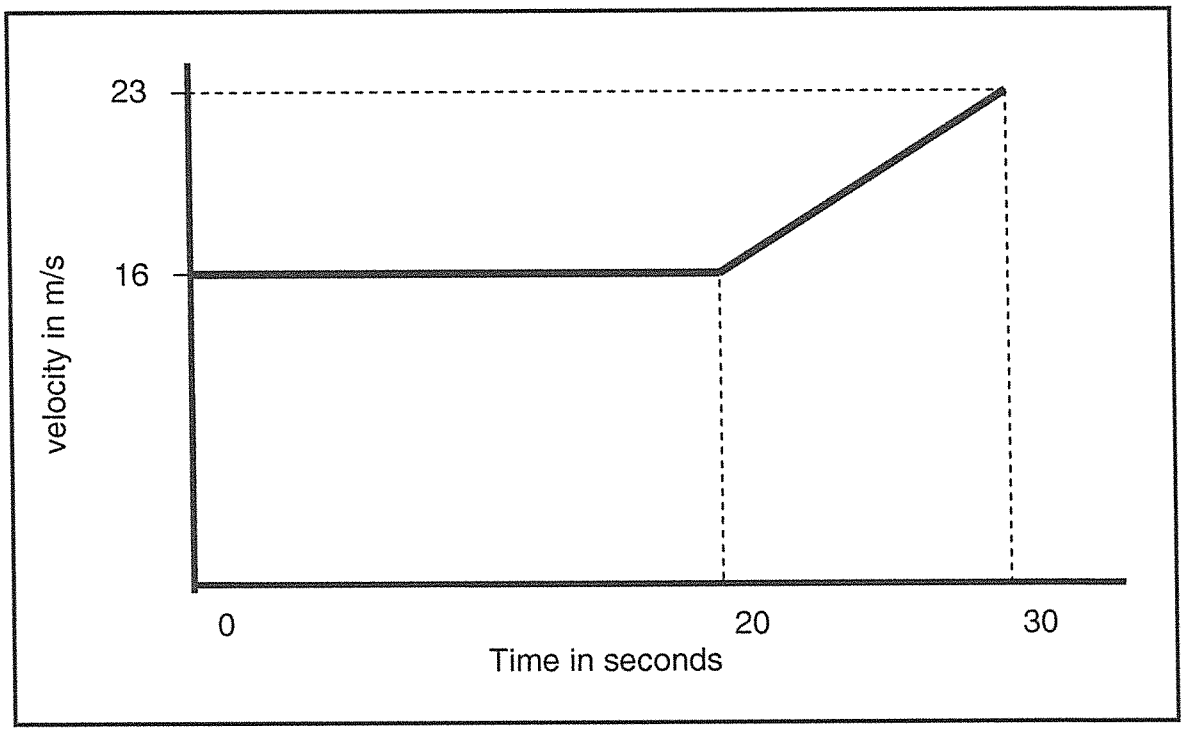


**FIGURE 1**

Determine the following:

1.2.1 The acceleration of the vehicle over the last 10 seconds (2)

1.2.2 The total distance travelled over 30 seconds (3)

1.2.3 The average velocity of the vehicle over 30 seconds (2)

Copyright reserved 

1.3 A truck, moving at 15 m/s, is brought to rest by applying the brakes for 3 seconds.

Calculate the following:

1.3.1 The deceleration of the truck

1.3.2 The distance over which the truck was brought to rest

(2 × 2) (4)

1.4 Define the term d*istance.* (1)

**[15]**

## QUESTION 2

2.1 Define *moment of a force.* (2)

2.2 What is the relationship between the resultant force and the equilibrant of a system of forces? (1)

2.3 FIGURE 2 below shows a horizontal beam resting on two supports L and R. The beam carries a 30 kN load 1 metre from the left-hand end of the beam as well as a 40 kN force 3 metres from the left-hand end. The beam must also support a 25 kN load situated at the right-hand end of the beam 3 metres from the support R. L and R are 7 m apart. Ignore the weight of the beam.

2.3.1 Determine the reactions on both supports by taking moments about both supports. (6)

2.3.2 Check your answer by balancing upward and downward forces.

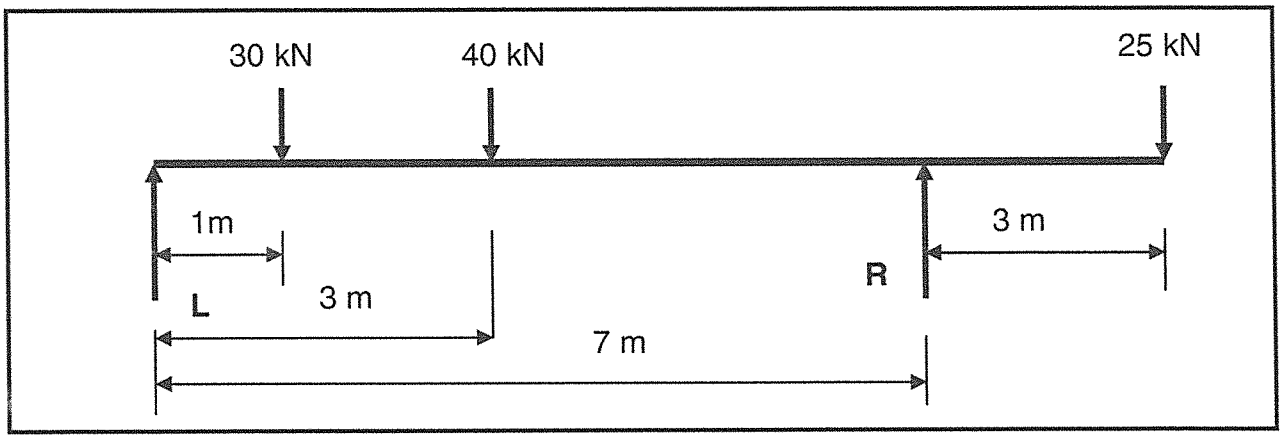


**FIGURE 2** (1)

**[10]**

Copyright reserved 

## QUESTION 3

A ball with a mass of 5 kg rolls down a slope of 10° with the horizontal. The length of the slope is 15 m. Neglect any friction.

Calculate the following:

3.1 The potential energy of the ball at the top of the slope with reference to the bottom (3)

3.2 The velocity of the ball at the bottom of the slope (2)

3.3 The momentum of the ball at the bottom of the slope (2)
**[7]**

## QUESTION 4

4.1 Define *power.* (2)

4.2 A machine part with a weight of 13 000 N is hoisted up at a building site through a height of 50 metres by means of a chain. The weight of the chain is 60 N/m.

4.2.1 Make a neat sketch of the force/distance graph of the lifting process. Use weight for the vertical axis and distance for the horizontal axis. (4)

4.2.2 Use the graph to determine the total work done. (2)

4.2.3 Calculate the power required during the lifting process when the load is 25 m from the top (i.e. halfway) and the velocity of lifting is 1,5 m/s. (2)
**[10]**

## QUESTION 5

5.1 Define the *velocity ratio* of a lifting machine. (2)

5.2 A driver gear with 100 teeth engages an intermediate gear with 60 teeth which rotates at 6 r/s. The intermediate gear drives a final driven gear which rotates at 15 r/s.

Calculate the following:

5.2.1 The rotational frequency of the driver gear

5.2.2 The number of teeth of the driven gear

(2 × 2) (4)

Copyright reserved 

5.3 In a differential wheel and axle lifting machine, an effort of 60 N is required to lift a load of 900 N. The diameters of the lifting machine are as follows:

| | |
|---|---|
| Wheel | 620 mm |
| Big axle | 500 mm |
| Small axle | 460 mm |

Calculate the following:

5.3.1 The mechanical advantage of the lifting machine

5.3.2 The velocity ratio of the lifting machine

5.3.3 The efficiency of the lifting machine

(3 × 2) (6)

5.4 The following data refer to a belt drive:

The tension ratio between the tight and slack side is 4,2 : 1
The force in the slack side of the belt is 500 N.
The diameter of the driving pulley is 350 mm.
The rotational frequency of the driving pulley is 550 r/min.

Calculate the following:

5.4.1 The tight side tension in the belt (1)

5.4.2 The belt speed in m/s (2)

5.4.3 The power transmitted by the belt (2)
**[17]**

## QUESTION 6

6.1 Define the SI unit *pascal.* (2)

6.2 A vertical pipe of 50 m length is filled with oil with a density of 820 kg/m$^3$.

Calculate the following:

6.2.1 The gauge pressure of the oil at the bottom of the pipe (2)

6.2.2 The absolute pressure of the oil at the bottom of the pipe (1)

Copyright reserved 

6.3 A body with a mass of 18 kg is pulled down an incline with an angle of 8° to the horizontal at constant velocity. The coefficient of friction between the body and the incline is 0,25.

Calculate the following:

6.3.1 The weight component parallel to the sliding plane (1)

6.3.2 The weight component perpendicular to the sliding plane (1)

6.3.3 The frictional force (1)

6.3.4 The external force required to pull the body down the incline (2)
**[10]**

## QUESTION 7

7.1 Define s*pecific heat capacity* of a substance. (2)

7.2 10 kg of coal is used to heat 500 kg of steel which is initially at a temperature of 15 °C.

Calculate the following:

7.2.1 The amount of heat energy liberated by the coal (2)

7.2.2 The final temperature of the steel if the heat transfer process is 80% efficient (3)

7.3 An aluminium bar with a length of 18 m at 20 °C expands by 120 mm after being heated. Determine the final temperature of the aluminium. (3)
**[10]**

## QUESTION 8

8.1 Explain what is meant by s*uperheated steam.* (1)

8.2 Name the THREE fundamental constituents of an atom and state the charge of each. (6 × ½) (3)

8.3 Explain what is meant by the term e*lectrolyte.* (2)

8.4 State TWO purposes for electroplating a material. (2)
**[8]**

Copyright reserved 

## QUESTION 9

9.1 Define *resistivity* of a material. (2)

9.2 The resistance between A and B in FIGURE 3 below is 6 Ω. Determine the resistance of the unknown resistance X Ω.

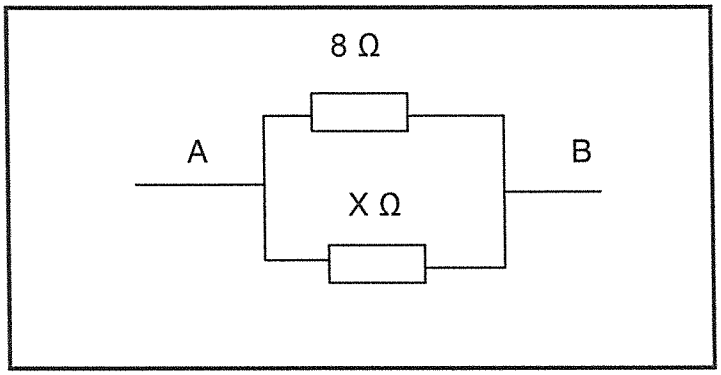


**FIGURE 3** (2)

9.3 Identify the material of a 785,4 m long wire that has a resistance of 2 Ω at 20 °C and a diameter of 3 mm. (4)

9.4 Make a neat sketch of an apparatus that may be used to illustrate self-induction. (3)

9.5 Explain ONE instance where self-induction is used in practice. (1)

9.6 Choose the correct expression from the answers given in brackets. Write only the answer next to the question number (9.6) in the ANSWER BOOK.

In self-induction, the direction of the self-induced voltage is (in the opposite direction/in the same direction) as the current that produced it. (1)
**[13]**

**TOTAL: 100**

Copyright reserved

# ENGINEERING SCIENCE N2

## FORMULA SHEET

All the formulae needed are not necessarily included. Any applicable formula may also be used.

$w = m \,.\, g$

$W = F \,.\, s$

$P = \dfrac{W}{t}$

$\eta = \dfrac{Output}{Input} .100\%$

$\eta = \dfrac{Uitset}{Inset} .100\%$

$\mu = \dfrac{F_\mu}{N_R}$

$\mu = \tan\Phi$

$F_T = F_\mu \ldots \begin{matrix} horizontal \\ horisontaal \end{matrix} \cdots a = 0$

$F_S = w\sin\theta$

$F_C = w\cos\theta$

$F_T = F_\mu \pm F_S \ldots a = 0$

$F_e = T_1 - T_2$

$\dfrac{T_1}{T_2} = \begin{matrix} tension\ \ ratio \\ spanningsverhouding \end{matrix}$

$P = F_e \,.\, v$

$v = \pi \,.\, d \,.\, n$

$n = \dfrac{N}{60}$

$N_A \,.\, T_A = N_B \,.\, T_B$

$SV = \dfrac{N_A}{N_Z} = VR$

$E_p = m.g.h.$

$E_K = \dfrac{1}{2} .m.v^2$

$E_T = E_p + E_K$

$HV = \dfrac{L}{E} = MA$

$VV = \dfrac{S_E}{S_L} = DR$

$\dfrac{HV}{VV} .100\% = \eta = \dfrac{MA}{DR} .100\%$

$VV = \dfrac{2D}{(d_1 - d_2)} = DR$

$VV = \dfrac{2D}{(D - d)} = DR$

$Q = m \,.\, c \,.\, \Delta t$

$m.ww = Q = m.hv$

$P = \dfrac{Q}{t}$

$\Delta l = l_o \,.\, \alpha \,.\, \Delta t$

$l_f = l_o \pm \Delta l$

$1\ m/s = 3{,}6\ km/h$

$s = u.t + \dfrac{1}{2} .a.t^2$

$v = u + a.t$

$v^2 = u^2 + 2as$

$\Sigma \uparrow F = \Sigma \downarrow F$

$\Sigma \curvearrowright M = \Sigma \curvearrowleft M$

$P_{ABS} = P_{ATM} + P_{MET}$

$p = \Delta g.h$

$\dfrac{1}{R_{PAR}} = \dfrac{1}{R_1} + \dfrac{1}{R_2} + \ldots + \dfrac{1}{R_n}$

$R_{SER} = R_1 + R_2 + \ldots + R_n$

$R = \dfrac{\rho \,.\, l}{a}$

Copyright reserved

higher education & training

Department:
Higher Education and Training
**REPUBLIC OF SOUTH AFRICA**

# MARKING GUIDELINE

## NATIONAL CERTIFICATE

## APRIL EXAMINATION

## ENGINEERING SCIENCE N2

## 4 APRIL 2013

**This marking guideline consists of 6 pages.**

Copyright reserved

**ALTERNATE CORRECT ANSWERS MUST BE CONSIDERED**

## QUESTION 1

1.1 1.1.1 40 km/h = 40/3,6 = 11,11 m/s ✓

1.1.2 127 cm = 127/100 m = 1,27 m ✓

1.1.3 1,2 GPa = 1200 MPa ✓

(3 × 1) (3)

1.2 1.2.1 Acceleration = $\Delta V/\Delta t$ = (23 – 16)/ 10 ✓ = 0,7 m/s$^2$ ✓ (2)

1.2.2 Distance = (16 × 20) + [(23 + 16) × 10]/2 = 320 + 195 = 515 m ✓✓✓ (3)

1.2.3 Av. vel. = 515/30 ✓ = 17,17 m/s ✓ (2)

1.3 1.3.1 Deceleration = $\Delta V/\Delta t$ = (15 – 0)/3 ✓ = 5 m/s$^2$ ✓ (2)

1.3.2 Distance = 0,5 a $t^2$ = 0,5 x 5 x $3^2$ ✓ = 22,5 m ✓ (2)

1.4 Distance covered regardless of direction (1)

**[15]**

## QUESTION 2

2.1 It is <u>the turning effect</u> of a <u>force about a point</u>.✓✓ (2)

2.2 The resultant and the equilibrant have the same value but act in opposite directions. ✓ (1)

2.3 2.3.1 Moments about L
CWM = ACWM
30 x 1 + 40 x 3 + 25 x 10 = R x 7
30 + 120 + 250 = 7 R R = 57,14 kN ✓

Moments about R
CWM = ACWM
L x 7 + 25 x 3 = 40 x 4 + 30 x 6
L = (160 + 180 – 75)/7
L = 37,86 kN ✓ (6)

2.3.2 57,14 + 37,86 = 30 + 40 + 25 o.k ✓ (1)

**[10]**

Copyright reserved

## QUESTION 3

3.1 P.E = mgh = 5 × 9,8 × 15 sin 10° ✓✓ = 127,63 J ✓ (3)

3.2 mgh = 0,5 mv$^2$, v=$\sqrt{2gh}$ = $\sqrt{2\times9{,}8\times15\sin10°}$ ✓ = 7,145 m/s ✓

or v= $\sqrt{\frac{127{,}63}{0{,}5\times5}} = 7{,}145 m/s$ (2)

3.3 Momentum = m x v = 5 × 7,145 ✓ = 35,725 kgm/s ✓ (2)
**[7]**

## QUESTION 4

4.1 Power is the rate of work done ✓✓ (2)

4.2 4.2.1

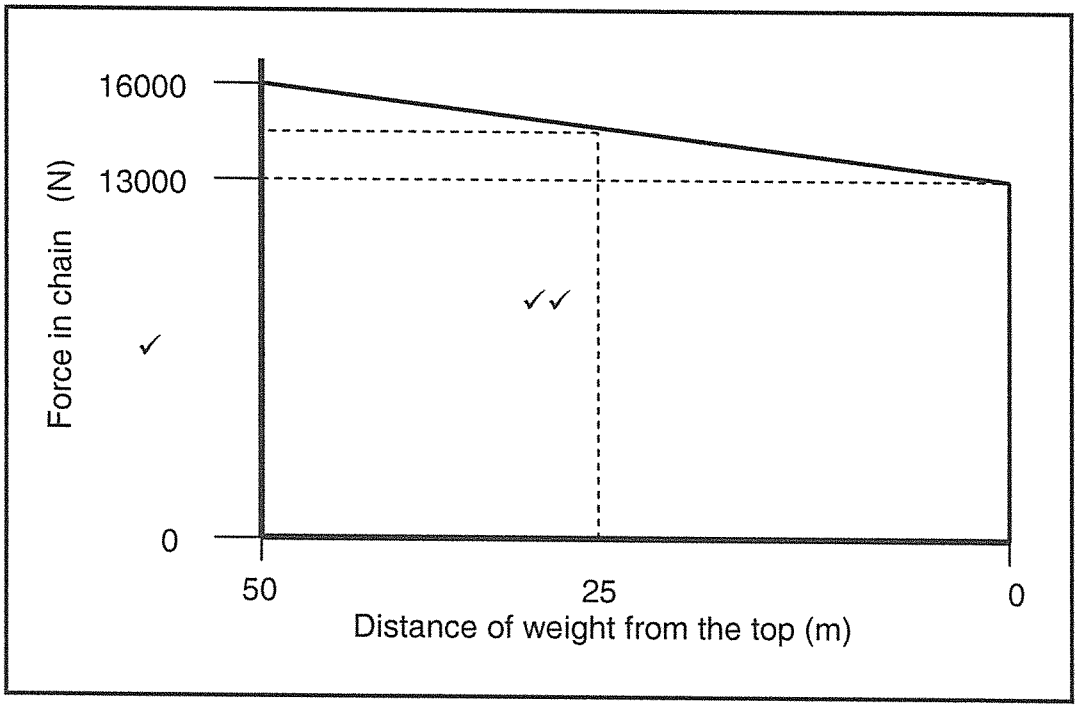


(4)

4.2.2 Work done = Area under graph = $\frac{16\,000+13\,000}{2}\times50=725\,kJ$ ✓✓

**OR**

Work done = (13 000 x 50) + (0,5 x 3 000 x 30)
= 725 000 J
= 725 kJ (2)

4.2.3 Power = w.d./sec.= $\frac{16\ 000\ +13\ 000}{2}\times1{,}5\ =\ 21{,}75\,kW$ ✓✓ (2)
**[10]**

Copyright reserved

## QUESTION 5

5.1 Velocity ratio is the ratio of the distance moved by the effort as opposed to the corresponding distance moved by the load. (2)

5.2 5.2.1 $\frac{n_1}{n_2}=\frac{t_1}{t_2}, n_1=\frac{n_2 t_1}{t_2}=\frac{6\times100}{60}=10\ r/s$ ✓✓ (2)

5.2.2 $t_3=\frac{n_3 t_2}{n_2}=\frac{15\times60}{6}=150\ teeth$ ✓✓ (2)

5.3 5.3.1 M.A. = Load/Effort = 900/60 ✓= 15 ✓ (2)

5.3.2 V.R.(D.R.) = $\frac{2D}{d_1-d_2}=\frac{2\times620}{500-460}=31$ ✓✓ (2)

5.3.3 Efficiency % = (M.A./V.R.) × 100 = 15/31 × 100 ✓ = 48,4 % ✓ (2)

5.4 5.4 1 $T_{tight}$ = 4,2 × 500 = 2 100 N ✓ (1)

5.4.2 Belt speed = πdn/60 = π × 0,35 × 550/60 ✓ = 10,08 m/s ✓ (2)

5.4.3 Power = $(T_1 - T_2) \times v$ = (2 100 – 500) × 10,08 ✓
= 16,127 kW ✓ (2)
**[17]**

## QUESTION 6

6.1 The pascal is 1 $N/m^2$ ✓✓ (2)

6.2 6.2.1 Gauge pressure = ρgh = 820 × 9,8 × 50 ✓ = 401,8 kPa ✓ (2)

6.2.2 Atmospheric pressure = 401,8 + 101,3 = 503,1 kPa ✓ (1)

6.3 6.3.1 $F_s = w \sin\theta$ = 18 × 9,8 × sin 8° = 24,55 N ✓ (1)

6.3.2 $F_c = w \cos\theta$ = 18 × 9,8 × cos 8° = 174,68 N ✓ (1)

6.3.3 $F_m = m \times w \cos\theta$ = 0,25 × 174,68 N = 43,67 N ✓ (1)

6.3.4 $F_{down} = F_m - F_s$ = 43,67 – 24,55 ✓ = 19,12 N ✓ (2)
**[10]**

Copyright reserved

## QUESTION 7

7.1 The amount of heat required to change the temperature of unit mass (1 kg) by unit temperature (1°) ✓✓ (2)

7.2 7.2.1 $Q = m \times h.v. = 10 \times 30 = 300$ MJ ✓✓ (2)

7.2.2 $h \times Q = m \times c \times \Delta t$, $t_2 = (h \times Q)/m \times c + t_1$
$t_2 = 0,8 \times 300 \times 10^6/500 \times 500 + 15$ ✓✓ = 975 °C ✓ (3)

7.3 $\Delta l = l \times c \times \Delta t$ $0,12 = 18 \times 23 \times 10^{-6} \times (t_2 - 20)$ ✓

$t_2 = \frac{0,12}{18 \times 23 \times 10^{-6}} + 20$ ✓ = 309,855 °C ✓

(3)
**[10]**

## QUESTION 8

8.1 Superheated steam is steam above the saturation temperature (above the boiling temperature) of water ✓ (1)

8.2 Proton ✓ Positive ✓
Neutron ✓ Neutral ✓
Electron ✓ Negative ✓ (½ × 6) (3)

8.3 Electrolyte is a <u>solution</u> able to <u>conduct electric current</u>. ✓✓ (2)

8.4
- Produce more durable surfaces ✓
- Beautify certain articles ✓
- Protect metals against corrosion ✓
- (Any 2 × 1) (2)

**[8]**

## QUESTION 9

9.1 Resistivity of a substance is the <u>resistance</u> across <u>opposite sides of a 1 $m^3$ cube</u> of that substance at a specific temperature. (20 °C) (2)

9.2 $\frac{1}{6} = \frac{1}{8} + \frac{1}{X} \times = \frac{6 \times 8}{8 - 6}$ ✓ = 48/2 = 24 Ω ✓ (2)

9.3 $R = \frac{\rho l}{a}$ $\rho = \frac{R \times a}{l} = \frac{2x(\pi x 0,003^2)}{4 \times 785,4} = 18 \times 10^{-9}$ ✓✓

Material = copper ✓✓ (4)

Copyright reserved

9.4

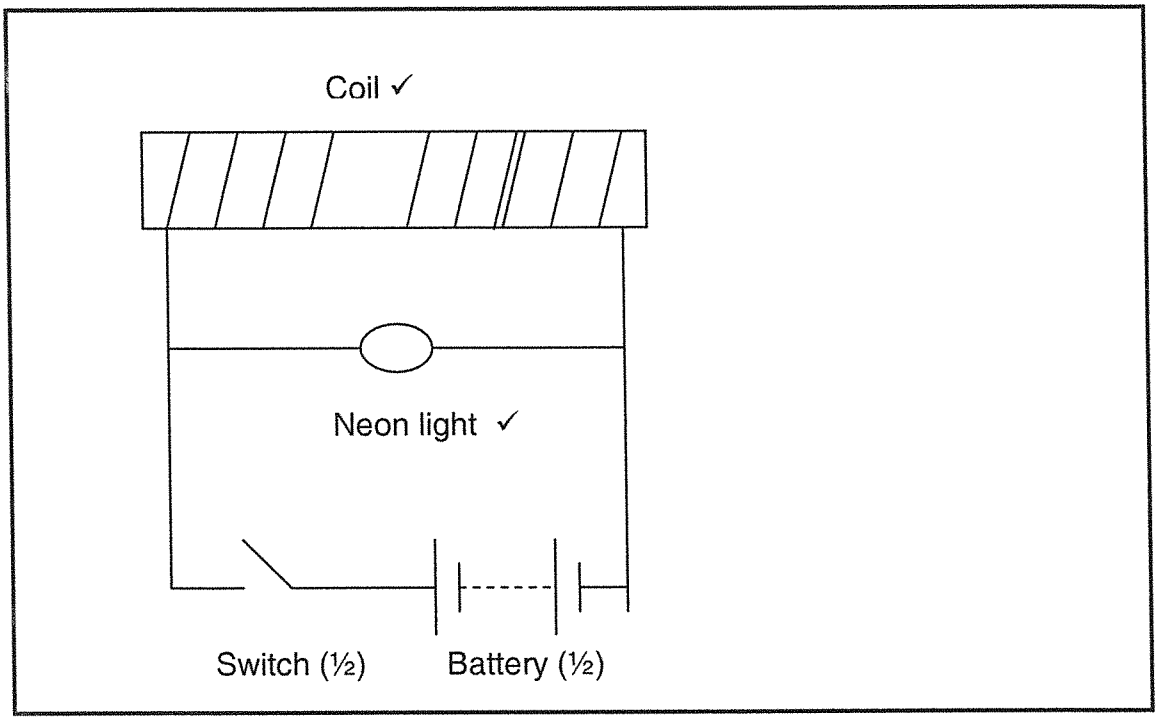


(3)

9.5
- Ignition coils in motor vehicles ✓
- Starters of neon lights

(Any 1 × 1) (1)

9.6 In the opposite direction ✓ (1)

**[13]**

**TOTAL: 100**

Copyright reserved