higher education & training

Department:
Higher Education and Training
REPUBLIC OF SOUTH AFRICA

T560(E)(J29)T

AUGUST EXAMINATION

NATIONAL CERTIFICATE

ENGINEERING SCIENCE N2

(15070402)

29 July 2014 (Y-Paper)
13:00–16:00

This question paper consists of 8 pages and 1 formula sheet.

ENGINEERING

Copyright reserved

DEPARTMENT OF HIGHER EDUCATION AND TRAINING
REPUBLIC OF SOUTH AFRICA

NATIONAL CERTIFICATE
ENGINEERING SCIENCE N2
TIME: 3 HOURS
MARKS: 100

INSTRUCTIONS AND INFORMATION

1. Answer ALL the questions.
2. Read ALL the questions carefully.
3. Number the answers according to the numbering system used in this question paper.
4. ALL the calculations should consist of at least the following THREE steps:
   (a)The formula used or the manipulation thereof
   (b)The substitution of the given data in the formula
   (c)The answer together with the correct SI unit
5. The following values MUST be used in this question paper, whenever applicable:

Gravitational acceleration	= 9,8 m/s²
Atmospheric pressure	= 101,3 kPa
Heat value of petrol	=25 MJ/kg
Heat value of coal	= 30 MJ/kg
Density of water	= 1 000 kg/m³
Specific heat capacity of water	= 4 187 J/kg °C
Specific heat capacity of steam	= 2 100 J/kg °C
Specific heat capacity of steel	= 500 J/kg °C
Specific heat capacity of copper	= 390 J/kg °C
Specific heat capacity of aluminium	= 900 J/kg °C
Linear coefficient of expansion of steel	= 0,000 012/°C
Linear coefficient of expansion of copper	= 0,000 023/°C
Linear coefficient of expansion of aluminium	= 0,000 017/°C
Resistivity of steel at 20 °C	= 0,000 000 155 Ωm
Resistivity of copper at 20 °C	= 0,000 000 018 Ωm
Resistivity of aluminium at 20 °C	= 0,000 000 028 Ωm

6. Rule off after each question.
7. Drawing instruments MUST be used for all the drawings.
8. Subsections of questions must be kept together.
9. Write neatly and legibly.

ENGINEERING

Copyright reserved

QUESTION 1: DYNAMICS

1.1 Define the following terms:

1.1.1 Velocity (2)

1.1.2 Acceleration (2)

1.2 The graph in FIGURE 1 below represents the velocity/time graph of a train travelling at a constant velocity and then decelerating.

Determine from the graph in FIGURE 1:

1.2.1 The deceleration of the train (2)

1.2.2 The total displacement of the train (3)

1.2.3 The average velocity of the train (2)

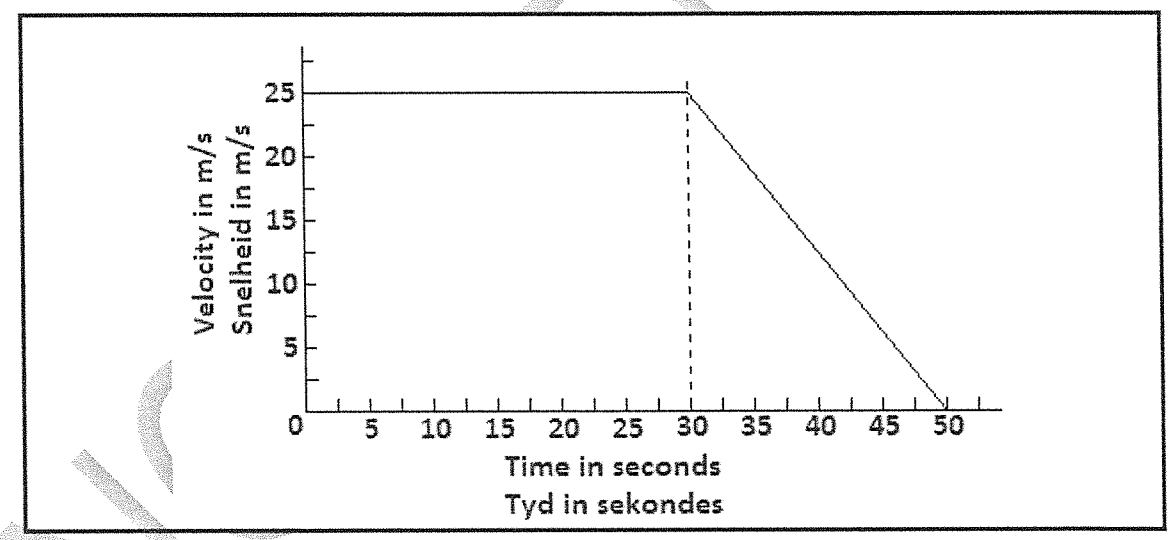

FIGURE 1

1.3. The maximum deceleration of a car is 15 m/s². If the car is travelling at 200 km/h, calculate:

1.3.1 The time it will take for the car to come to rest (2)

1.3.2 The absolute minimum distance needed for the car to stop (2)

[15]

ENGINEERING

QUESTION 2: STATICS

2.1 A light horizontal beam is 15 m long and is supported at the left end and 3 m from the right end.
The beam carries the following point loads:

120 N 2 m from the left-hand end
80 N 5 m from the left-hand end
90 N at the right-hand end

2.1.1 Make a neat line sketch of the beam and clearly show all its dimensions and loads. (2)

2.1.2 Calculate the reactions of both points of support by taking moments about both supports. (Ignore the weight of the beam.) (6)

2.1.3 Check the answer by balancing upward and downward forces. (1)

2.2 A force of 200 N acts at 30° to the horizontal.

Calculate the vertical component of the 200 N force. (1)
[10]

QUESTION 3: ENERGY AND MOMENTUM

3.1 Define the following:

3.1.1 Potential energy (2)

3.1.2. The law of conservation of energy (2)

3.2 A car with a mass of 1 600 kg is parked on an incline which makes an angle of 30° with the horizontal. The length of the slope is 2 500 m as indicated in FIGURE 2.

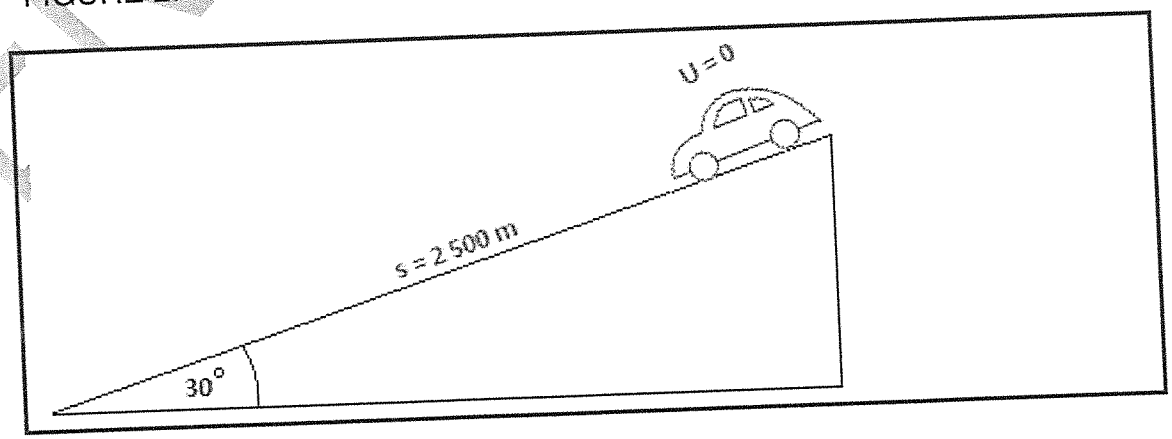

FIGURE 2

ENGINEERING

Copyright reserved

Calculate the following:

3.2.1 The potential energy of the car at the top of the slope (2)

3.2.2 The kinetic energy of the car at the bottom of the slope if it runs down the slope (ignore any friction) (1)
[7]

QUESTION 4: WORK DONE (POWER AND EFFICIENCY)

4.1 Define the term *work*. (2)

4.2 The graph in FIGURE 3 below represents a uniformly varying force against distance, which is obtained when a steel block is hoisted by a 280 m long cable that is wound onto a drum at the top. The force axis represents the force in the cable at the top where it touches the drum and the distance axis represents the length of the cable already wound onto the drum.

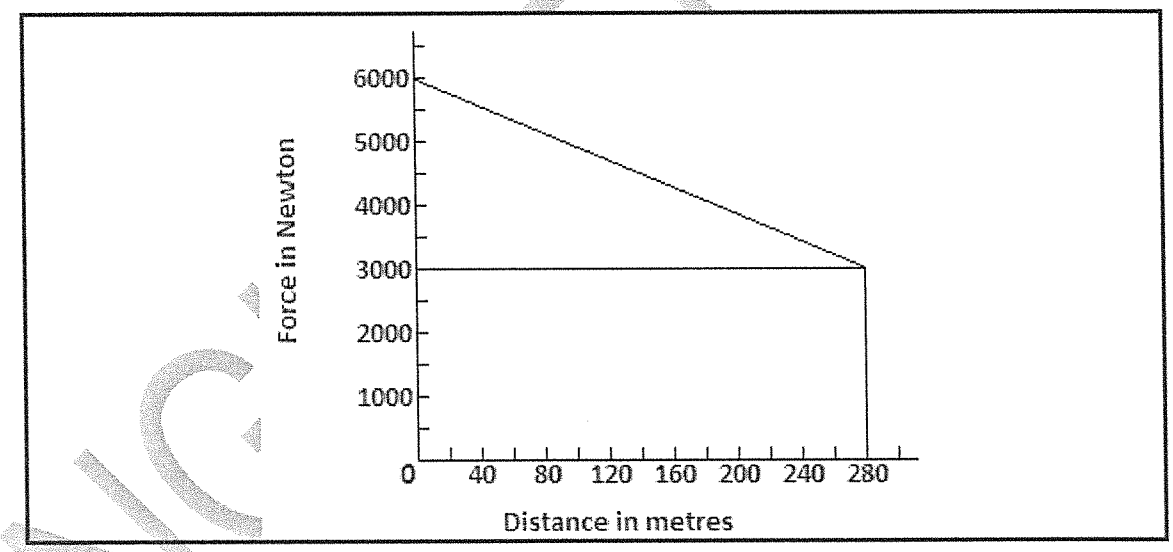

(2)

FIGURE 3

Determine by making use of FIGURE 3 above:

4.2.1 The weight of the cable per metre length (1)

4.2.2 The work done in winding the total length of cable with the steel block attached to the end of the cable (3)

4.2.3 The power applied when the end of the cable is 100 m away from the drum and the velocity is 6 m/s

4.3 Calculate the effective force on a torque wrench if the torque is 800 Nm and the length of the handle from the turning point is 600 mm. (2)
[10]

ENG-KING

QUESTION 5: MECHANICAL DRIVES AND LIFTING MACHINES

5.1 Name TWO types of mechanical drive transfers. (2)

5.2 State TWO methods of reducing belt slip. (2)

5.3 Name TWO advantages of gear drives over belt drives. (2)

5.4 The tension ratio of the tight side force to the slack side force of a belt drive is 3 : 1. The force in the slack side is 300 N. The belt speed is 35 m/s.

Calculate the following:

5.4.1 The tight side force in the belt (2)

5.4.2 The power transmitted by the belt (2)

5.5 A chain drive has a driving pulley with 20 teeth and a driven pulley with 60 teeth. The rotational frequency of the driving pulley is 20 r/s.

5.5.1 Calculate the speed of the driven pulley. (3)

5.5.2 Calculate the speed ratio of the gears. (2)

5.6 Define the unit *pascal*. (2)
[17]

QUESTION 6: FRICTION

6.1 State THREE methods of reducing friction. (3)

6.2 A block with a weight of 600 N is positioned on an incline 12° to the horizontal. The friction force is 95 N.

Calculate the following:

6.2.1 The parallel weight component (force in line with plane) (2)

6.2.2 The perpendicular weight component (force perpendicular with plane) (2)

6.2.3 The smallest force required to pull the block up the incline (3)
[10]

ENGINEERING

Copyright reserved

QUESTION 7: HEAT

7.1 Define the *specific heat capacity* of a substance. (2)

7.2 The following data refers to an aluminium rod, 2 m in length, being heated by burning coal:

Initial temperature of the rod	= 25 °C
Mass of the coal burned	= 0,75 kg
Percentage of heat transferred to the rod	= 40%
Mass of the rod	= 10 kg

Calculate the following:

7.2.1 The amount of heat energy released by the coal (2)

7.2.2 The heat energy transferred to the rod (2)

7.2.3 The final temperature of the rod (2)

7.2.4 The final length of the rod (2)

7.3 State ONE advantage of steam. (1)
[11]

QUESTION 8: PARTICLE STRUCTURE OF MATTER

8.1 Name the electric charge on each of the following sub-atomic particles:

8.1.1 Proton

8.1.2 Neutron

8.1.3 Electron

(3 x 1) (3)

8.2 What is an *electrolyte*? (1)

8.3 Define the term *electroplating.* (1)

8.4 Give TWO reasons for the electroplating of objects. (2)
[7]

ENGINEERING

Copyright reserved

QUESTION 9: ELECTRICITY

9.1 State FOUR factors that influence the resistance of a conductor. (2)

9.2 Answer the following questions by referring to FIGURE 4 below.

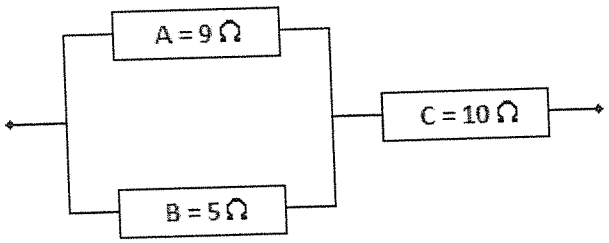

FIGURE 4

9.2.1 If resistor A is removed, will the total resistance of the connection increase or decrease? (1)

9.2.2 Calculate the total resistance of the connections (all three resistors). (3)

9.3 Calculate the total resistance in a copper conductor with a diameter of 15 mm and a length of 5 500 m at 20 °C. (3)

9.4 Make a neat, labelled drawing of an apparatus that may be used to demonstrate electromagnetic induction. (3)

9.5 Give ONE example where electromagnetic induction is used in practice. (1)
[13]

TOTAL: 100

ENGINEERING

Copyright reserved

(15070402)

FORMULA SHEET

All the formulae needed are not necessarily included.
Any applicable formula may also be used.

$$w = m \,.\, g$$

$$W = F \,.\, s$$

$$P = \frac{W}{t}$$

$$\eta = \frac{Output}{Input} .100\%$$

$$\eta = \frac{Uitset}{Inset} .100\%$$

$$\mu = \frac{F_\mu}{N_R}$$

$$\mu = \tan\Phi$$

$$F_T = F_\mu \ldots \begin{matrix} horizontal \\ horisontaal \end{matrix} \ldots a = 0$$

$$F_S = w \sin\theta$$

$$F_C = w \cos\theta$$

$$F_T = F_\mu \pm F_S \ldots a = 0$$

$$F_e = T_1 - T_2$$

$$\frac{T_1}{T_2} = \begin{matrix} tension\ \ ratio \\ spanningsverhouding \end{matrix}$$

$$P = F_e \,.\, v$$

$$v = \pi \,.\, d \,.\, n$$

$$n = \frac{N}{60}$$

$$N_A \,.\, T_A = N_B \,.\, T_B$$

$$SV = \frac{N_A}{N_Z} = VR$$

$$E_p = m.g.h.$$

$$E_K = \frac{1}{2} .m.v^2$$

$$E_T = E_p + E_K$$

$$HV = \frac{L}{E} = MA$$

$$VV = \frac{S_E}{S_L} = DR$$

$$\frac{HV}{VV} .100\% = \eta = \frac{MA}{DR} .100\%$$

$$VV = \frac{2D}{(d_1 - d_2)} = DR$$

$$VV = \frac{2D}{(D - d)} = DR$$

$$Q = m \,.\, c \,.\, \Delta t$$

$$m.ww = Q = m.hv$$

$$P = \frac{Q}{t}$$

$$\Delta l = l_o \,.\, \alpha \,.\, \Delta t$$

$$l_f = l_o \pm \Delta l$$

$$1\ m/s = 3{,}6\ km/h$$

$$s = u.t + \frac{1}{2} .a.t^2$$

$$v = u + a.t$$

$$v^2 = u^2 + 2as$$

$$\Sigma \uparrow F = \Sigma \downarrow F$$

$$\Sigma \curvearrowright M = \Sigma \curvearrowleft M$$

$$P_{ABS} = P_{ATM} + P_{MET}$$

$$p = \Delta g.h$$

$$\frac{1}{R_{PAR}} = \frac{1}{R_1} + \frac{1}{R_2} + \ldots + \frac{1}{R_n}$$

$$R_{SER} = R_1 + R_2 + \ldots + R_n$$

$$R = \frac{\rho \,.\, l}{a}$$

ENGINEERING

Copyright reserved

higher education & training

Department:
Higher Education and Training
REPUBLIC OF SOUTH AFRICA

MARKING GUIDELINE

NATIONAL CERTIFICATE

AUGUST EXAMINATION

ENGINEERING SCIENCE N2

29 JULY 2014

This marking guideline consists of 9 pages.

Copyright reserved

NOTE: ☑ denotes half mark

QUESTION 1

1.1.1 Velocity is the rate✓ of displacement. ✓ (2)

1.1.2 Acceleration is the rate of change✓ of velocity. ✓ (2)

1.2 1.2.1 $A = \frac{v - u}{t}$

$= \frac{0 - 25}{20}$ ✓

$= 1{,}25\ m/s^2$ ✓ (2)

1.2.2 $S_{total} = S_{rect} + S_{triangle}$

$= (25 \times 30) + (0.5 \times 20 \times 25)$ ✓

$= 750 + 250$ ✓

$= 1\ 000\ m$ ✓ (3)

1.2.3 $v_{av} = \frac{s_{tot}}{t_{tot}}$

$= \frac{1\ 000}{50}$ ✓

$= 20\ m/s$ ✓ (2)

1.3 1.3.1 $t = \frac{v - u}{a}$

$= \frac{0 - 55.555}{-15}$ ✓

$= 3.704$ ✓ (2)

Copyright reserved

1.3.2 Min. distance

$$s = ut + \frac{1}{2}at^2 \quad \checkmark$$

$$= 55{,}555 \times 3.704 + \frac{1}{2}(-15)3{,}704^2 \quad \checkmark$$

$$= 102{,}88 \text{ m}$$

OR

$$v^2 = u^2 + 2aS$$

$$0^2 = 55{,}555^2 + 2(-15)S$$

$$S = \frac{-3086{,}42}{-30} \quad \checkmark$$

$$S = 102{,}88\text{m} \quad \checkmark$$

(2)
[15]

QUESTION 2

2.1 2.1.1

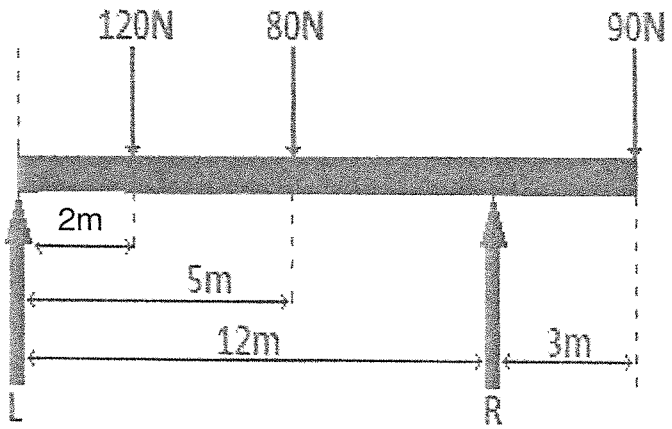

(2)

2.1.2 About L / OM L

$$\sum ACM = \sum CM$$

$$R \times 12 = 120(2) + 80(5) + 90(15) \quad ✓✓$$

$$12R = 240 + 400 + 1350$$

$$R = 165{,}83N \quad ✓$$

About R / OM R

$$\sum ACM = \sum CM$$

$$(120)(10) + 80(7) = 90(3) + L(12) \quad ✓✓$$

$$560 + 1200 = 270 + 12L$$

$$L = 124{,}17N \quad ✓$$

(6)

2.1.3

$$\sum F_{up} = \sum F_{down}$$

$$124{,}17 + 165{,}83 = 120 + 80 + 90 \quad ✓$$

$$290 = 290 \quad ✓$$

(1)

2.2 Vc = 200 sin 30^0 ☑

= 100 N ☑

(1)
[10]

QUESTION 3

3.1 3.1.1 Potential energy is the energy a body possesses due to its mass✓ and height.✓ (2)

3.1.2 Law of conventional energy states that energy cannot be created or destroyed✓ but can be changed from one form to another.✓ (2)

3.2 3.2.1 $Ep = m \times g \times h$

$= 1600 \times 9.8 \times 1250$ ✓

$= 19600000$ J ✓

$Ep = 19.6$ MJ (2)

3.2.2 Ke at bottom = Pe at top

$= 19600000$ J ✓ (1)
[7]

QUESTION 4

4.1 Work is done when a force is applied to an object ✓ and the object is moved over a distance. ✓ (2)

4.2 4.2.1 Weight of cable per metre

$W = w \times L$

$3\,000 = w \times 280$ ☑

$w = 3\,000 / 280$

$= 10.7143$ N/m ☑ (1)

4.2.2 $WD_{total} = WD_{rectangle} + WD_{triangle}$
✓ ✓

$= (3\,000 \times 280) + (0.5 \times 280 \times 3\,000)$

$= 1260000$ J ✓ (3)

4.2.3 $F_C = W_L + W_C$

$= 3\,000 + (10.7143 \times 100)$ ☑

$= 4017.43$ N ☑

$P_o = F_c \times V$

$= 4017.43 \times 6$ ☑

$= 24\,428$ W ☑ (2)

4.3 $T = F \times r$

$800 = F \times 0.6$ ✓

$F = 1333.333$ N ✓ (2)

[10]

QUESTION 5

5.1
- Gear drives
- Belt drives
- Chain drives

(2)

5.2
- Tension the belt properly
- Increase the arc of contact
- Increase the coefficient of friction

(2)

5.3
- Gear drives have more torque
- There is no slip in gear drives
- Gear drives use a smaller space
- There is less maintenance in gear drives

(2)

5.4 5.4.1

Tight side tension

$T_1 = 3 \times T_2$ ☑

$= 3 \times 300$ ☑

$= 900N$ ✓ (2)

5.4.2

$P_0 = (T_1 - T_2)V$ ☑

$= (900 - 300)35$ ☑

$= 21\,000W$ ✓ (2)

5.5 5.5.1 D1 X N1 = D2 X N2 ✓

$N2 = \frac{20 \times 20}{60}$ ✓

$= 6.67$ r/s ✓ (3)

5.5.2 N1 /N2 = 20/6.67 ✓

= 3 : 1 ✓ (2)

5.5 The unit pascal is when a load of 1 Newton is applied over an area of 1 m^2. (2)

[17]

Copyright reserved

QUESTION 6

6.1
- Make the surfaces smoother ✓
- Use lubricants ✓
- Use bearings ✓

(3)

6.2 6.2.1 $Fs = mg \times \sin \Theta$

$= 600 \times \sin 12^0$ ✓

$= 124.74$ N ✓

(2)

6.2.2 $Fc = mg \times \cos \Theta$

$= 600 \times \cos 12^0$ ✓

$= 586.888$ N ✓

(2)

6.2.3 $Fup = Fu - FS$ ✓

$= 75 + 124.74$ ✓

$= 199.747$ N ✓

(3)
[10]

QUESTION 7

7.1 The amount of heat energy (in joules) required to heat a body with a mass of 1 kg at a temperature of 1 ^{0}C (2)

7.2 7.2.1 Heat energy from coal

$Q = m \times HV$
$= 075 \times 30$ ✓
$= 22.5$ MJ ✓

(2)

7.2.2 Heat to rod

Q rod = 40% (Q coal)
$= 0.4 \times 22.5$ ✓
$= 9$ MJ ✓

(2)

7.2.3 $Q = m \times c \times \Delta t$
$9000\ 000 = 10 \times 900 \times \Delta t$
$\Delta t = 1\ 000\ ^0$C ✓

$\Delta t = 25 + tf$
$tf = 1\ 000 - 25$
$= 975\ ^0$C ✓

(2)

Copyright reserved

7.2.4 $\Delta L = Lo \times \alpha \times \Delta t$
$= 2\,000 \times 0.000017 \times 1\,000$
$= 46$ mm ✓

$Lf = Lo + \Delta L$
$= 2\,000 + 46$
$= 2\,034$ mm
$= 2.043$ m (2)

7.3
- Steam is relatively cheap ✓
- Steam is clean – pollution free.
- Steam can be used repeatedly

(Any 1 x 1) (1)
[11]

QUESTION 8

8.1 8.1.1 Positive

8.1.2 Neutral (no charge)

8.1.3 Negative (3)

8.2 An electrolyte is a solution that is able to conduct an electric current. (1)

8.3 Electroplating is the process of covering metal with a hard, durable coating. (1)

8.4 Electroplating makes the surface hard and wear-resistant. ✓
Electroplating makes the material corrosion-resistant. ✓
Electroplating beautifies the object. (Any 2 x 1) (2)
[7]

QUESTION 9

9.1
- Resistivity/type of material ✓
- Length diameter/thickness ✓
- Temperature

(2)

9.2 9.2.1 Increase ✓ (1)

9.2.2 Total Resistance

$$R_p = \frac{R_A \times R_B}{R_A + R_B} \quad ✓$$
$$= \frac{5 \times 9}{5 + 9}$$
$$= 3{,}214\ \Omega \quad ✓$$

$$R_{total} = R_p + R_c$$
$$= 3{,}214 + 10$$
$$= 13{,}214\ \Omega \quad ✓$$

(3)

Copyright reserved

9.3

$$R = \frac{\rho \times l}{A}$$

$$= \frac{18 \times 10^{-9} \times 5500}{176{,}714 \times 10^{-6}} \quad ✓$$

$$= 0{,}56\ \Omega \quad ✓$$

$$A = \frac{\pi}{4} d^2$$

$$= \frac{\pi}{4} (0{,}015)^2$$

$$= 176{,}714 \times 10^{-6}\ m^2 \quad ✓$$

(3)

9.4

SELF-INDUCTION/SELF-INDUKSIE

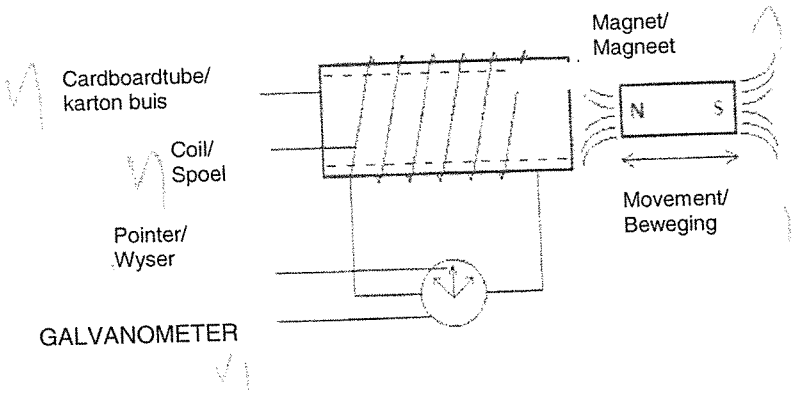

(3)

9.5
- Transformers ✓
- Generators
- Electric motors

(1)
[13]

TOTAL: 100

Copyright reserved