higher education & training

Department:
Higher Education and Training
REPUBLIC OF SOUTH AFRICA

T560(E)(A1)T

APRIL EXAMINATION

NATIONAL CERTIFICATE

ENGINEERING SCIENCE N2

(15070402)

1 April 2014 (Y-Paper)
13:00–16:00

This question paper consists of 9 pages and 1 formula sheet.

ENGINEERING

Copyright reserved

DEPARTMENT OF HIGHER EDUCATION AND TRAINING
REPUBLIC OF SOUTH AFRICA

NATIONAL CERTIFICATE
ENGINEERING SCIENCE N2
TIME: 3 HOURS
MARKS: 100

INSTRUCTIONS AND INFORMATION

1. Answer ALL the questions.
2. Read ALL the questions carefully.
3. Number the answers according to the numbering system used in this question paper.
4. Subsections of questions must be kept together.
5. ALL the calculations should consist of at least the following THREE steps:
   (a)The formula used or the manipulation thereof
   (b)The substitution of the given data in the formula
   (c)The answer together with the correct SI unit
6. Use the following values whenever applicable:

Gravitational acceleration	= 9,8 m/s²
Atmospheric pressure	= 101,3 kPa
Heat value of petrol	=25 MJ/kg
Heat value of coal	= 30 MJ/kg
Density of water	= 1 000 kg/m³
Specific heat capacity of water	= 4 187 J/kg °C
Specific heat capacity of steam	= 2 100 J/kg °C
Specific heat capacity of steel	= 500 J/kg °C
Specific heat capacity of copper	= 390 J/kg °C
Specific heat capacity of aluminium	= 900 J/kg °C
Linear coefficient of expansion of steel	= 0,000 012/°C
Linear coefficient of expansion of copper	= 0,000 017/°C
Linear coefficient of expansion of aluminium	= 0,000 023/°C
Resistivity of steel at 20 °C	= 0,000 000 155 Ωm
Resistivity of copper at 20 °C	= 0,000 000 018 Ωm
Resistivity of aluminium at 20 °C	= 0,000 000 028 Ωm

7. Drawing instruments must be used for all the drawings.
8. Rule off on completion of each question.
9. Write neatly and legibly.

ENGINEERING

Copyright reserved

SECTION A

QUESTION 1

1.1 List THREE effects that the application of a force can have on an object. (3)

1.2 The graph in FIGURE 1 represents the velocity/time graph of a bus accelerating, and then travelling at a constant velocity.

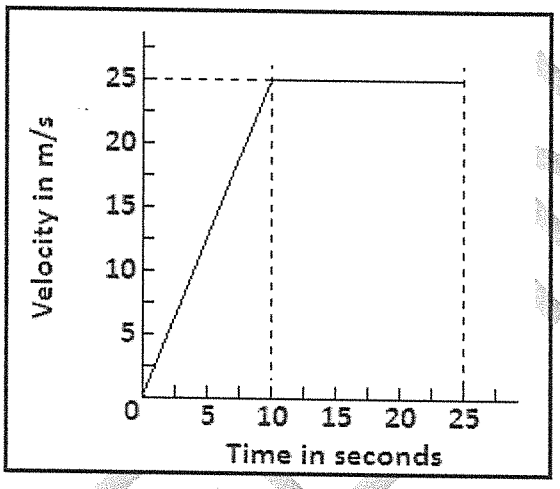

FIGURE 1

Use the graph to determine the following:

1.2.1 The acceleration of the bus (3)

1.2.2 The total displacement of the bus (3)

1.2.3 The average velocity of the bus (2)

1.3 An aeroplane lands at a speed of 70 m/s. The maximum deceleration of the aeroplane is 2,5 m/s².

Calculate the following:

1.3.1 The time it takes the aeroplane to come to rest (2)

1.3.2 The absolute minimum length of runway needed for the aeroplane to land safely (2)

[15]

ENGINEERING

Copyright reserved

QUESTION 2: STATICS

2.1 A horizontal light beam as shown in FIGURE 2 rests on two supports L and R.

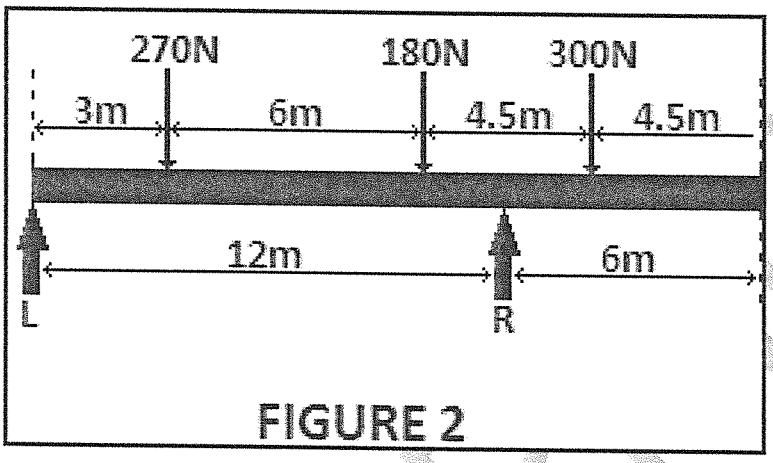

FIGURE 2

2.1.1 Determine the reactions by taking moments about both supports (ignore the weight of the beam). (6)

2.1.2 Check your answer by balancing upward and downward forces. (1)

2.2 Explain what is understood by the *resultant of a system of forces.* (2)

2.3 Give a practical example of a 'couple' in engineering. (1)
[10]

QUESTION3: ENERGY AND MOMENTUM

3.1 Define *kinetic energy.* (2)

3.2 A brick with a mass of 4,5 kg is thrown vertically into the air from ground level. It leaves the hand of the person throwing the stone at a velocity of 10 m/s.

Calculate the following:

3.2.1 The kinetic energy of the brick the moment it leaves the hand of the person throwing it (2)

3.2.2 The maximum height the brick will reach with reference to the hand of the person throwing it (2)

3.2.3 The momentum of the brick the moment it leaves the hand of the person throwing it (2)
[8]

ENGINEERING

Copyright reserved

QUESTION 4: WORK, POWER AND EFFICIENCY

4.1 Define the unit *watt*. (1)

4.2 A machine with a weight of 800 N is lifted through a height of 120 m by means of a cable winding onto a drum. The weight of the cable is 20 N/m.

4.2.1 Calculate the total weight of the cable. (1)

4.2.2 Make a neat line sketch of the force/distance graph, using the information given above. (2)

4.2.3 Calculate the work done in winding up the total length of the cable with the machine attached to the end of the cable. (3)

4.3 The turning force applied to a flywheel is 1 800 N. The diameter of the flywheel is 400 mm.

Calculate the torque delivered by the flywheel. (3)
[10]

ENGINEERING

Copyright reserved

QUESTION 5: MECHANICAL DRIVES AND LIFTING MACHINES

5.1 Give TWO disadvantages of belt drives. (2)

5.2 The compound gear drive in FIGURE 3 below consists of 4 gears.

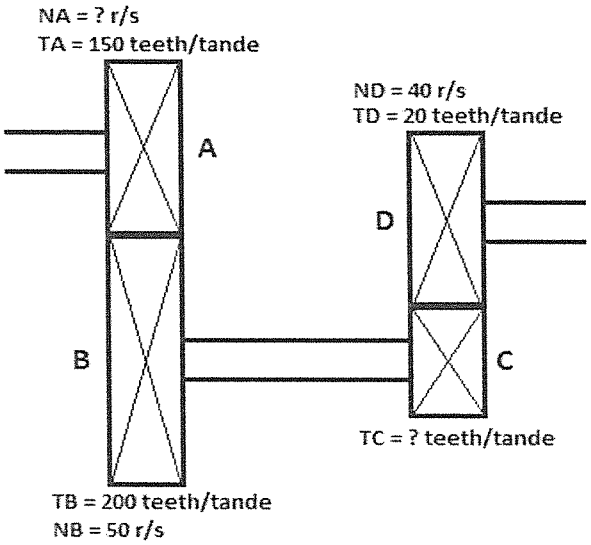

FIGURE 3

Calculate the following:

5.2.1 The rotational frequency of gear A in r/s (2)

5.2.2 The number of teeth on gear C if gear D is rotating at 40 r/s (2)

5.3 The following data refer to a belt drive:

The tension ratio between the slack side and the tight side	= 4
The force in the slack side of the belt	= 500 N
The diameter of the driving pulley	= 250 mm
The rotational frequency of the driving pulley	= 35 r/s

Calculate the following:

5.3.1 The belt speed in m/s (2)

5.3.2 The tight-side tension in the belt (2)

5.3.3 The power transmitted by the belt (2)

5.4 Define Pascal's Law. (2)

5.5 Calculate the density of seawater if the gauge pressure at a depth of 120 m in the ocean is 1 400 kPa. (2)

5.6 Calculate the absolute pressure on a diver's body in seawater at a depth of 120 m and a gauge pressure of 1 400 kPa. (1)

[17]

Copyright reserved

QUESTION 6: FRICTION

6.1 Name ONE method to reduce friction. (1)

6.2 A body with a mass of 10 kg is pulled up an incline with an angle of 30° to the horizontal. The coefficient of friction between the body and the sliding surface is 0,25.

Calculate the following:

6.2.1 The weight component perpendicular to the sliding plane (2)

6.2.2 The weight component parallel to the sliding plane (2)

6.2.3 The frictional force (2)

6.2.4 The external force required to pull the body up the incline plane (2)
[9]

QUESTION 7: HEAT ENERGY

7.1 Define *specific heat-capacity* of a material. (1)

7.2 A boiler uses 50 kg of coal per hour.

Calculate the following:

7.2.1 The energy used per hour (2)

7.2.2 The power output of the boiler if the efficiency of the boiler is 100% (2)

7.2.3 The mass of water that can be heated from 20°C to 100°C if the efficiency of the boiler is 100% (2)

7.3 A copper bar's length at 20°C is found to be 10 m long. The bar is then heated up to 200°C.

Calculate the change in length of the copper bar in mm. (2)

ENGINEERING

Copyright reserved

7.4 The sketch in FIGURE 4 below illustrates the graph of the formation of steam at a constant pressure.

Refer to the graph and answer the questions.

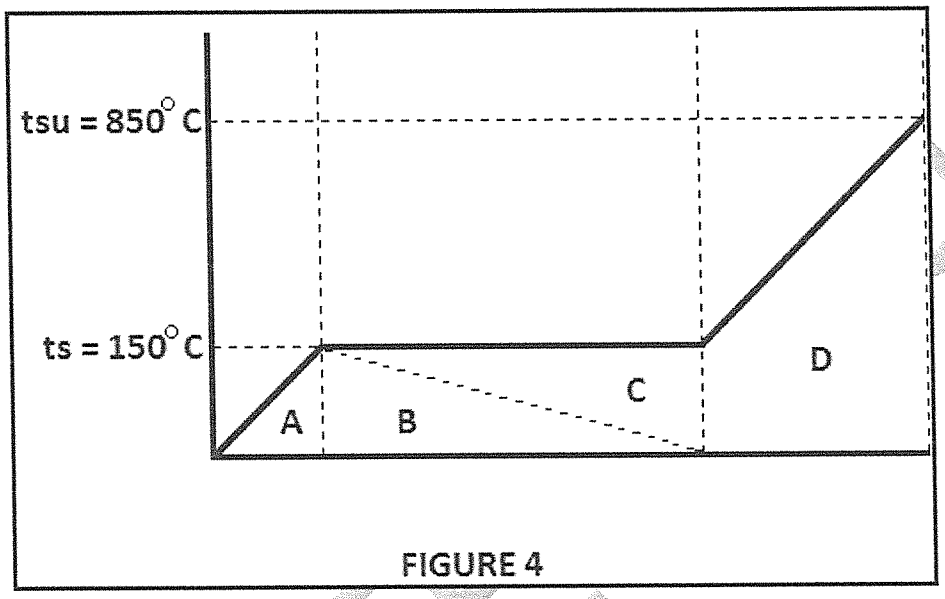

FIGURE 4

7.4.1 What does the symbol 'ts' represent with regard to temperature? (1)

7.4.2 What does the symbol 'tsu' represent with regard to temperature? (1)
[11]

QUESTION 8: PARTICLE STRUCTURE OF MATTER

8.1 What is an ion? (1)

8. Explain how positive ions are formed. (1)

8.3 Name the THREE fundamental constituents of an atom and state the charge of each. (6)
[8]

ENGINEERING

Copyright reserved

QUESTION 9: ELECTRICITY

9.1 Two resistors of 6 Ω and 24 Ω are connected in parallel.
A 19 Ω resistor is now connected in series to the parallel connection.

Calculate the following:

9.1.1 The total resistance of the parallel connection (2)

9.1.2 The total resistance of the THREE resistors (2)

9.2 Make a neat, labelled drawing of an apparatus that may be used to demonstrate electromagnetic induction. (3)

9.3 Name TWO examples where electromagnetic induction is used to advantage in practice. (2)

9.4 Determine the length of an aluminum conductor with a cross-sectional area of 80 mm² that has a resistance of 1,2 Ω at 20° C. (2)

9.5 Indicate whether the following statement is TRUE or FALSE:

Rubber is a conductor of electricity. (1)
[12]

TOTAL: 100

ENGINEERING

Copyright reserved

FORMULA SHEET

All the formulae needed are not necessarily included.
Any other applicable formula may also be used.

$w = m \,.\, g$

$W = F \,.\, s$

$P = \frac{W}{t}$

$\eta = \frac{Output}{Input} .100\%$

$\eta = \frac{Uitset}{Inset} .100\%$

$\mu = \frac{F_\mu}{N_R}$

$\mu = \tan\Phi$

$F_T = F_\mu \ldots \begin{matrix} horizontal \\ horisontaal \end{matrix} \cdots a = 0$

$F_S = w \sin\theta$

$F_C = w \cos\theta$

$F_T = F_\mu \pm F_S \ldots a = 0$

$F_e = T_1 - T_2$

$\frac{T_1}{T_2} = \begin{matrix} tension\ ratio \\ spanningsverhouding \end{matrix}$

$P = F_e \,.\, v$

$v = \pi \,.\, d \,.\, n$

$n = \frac{N}{60}$

$N_A \,.\, T_A = N_B \,.\, T_B$

$SV = \frac{N_A}{N_Z} = VR$

$E_p = m.g.h.$

$E_K = \frac{1}{2} .m.v^2$

$E_T = E_p + E_K$

$HV = \frac{L}{E} = MA$

$VV = \frac{S_E}{S_L} = DR$

$\frac{HV}{VV} .100\% = \eta = \frac{MA}{DR} .100\%$

$VV = \frac{2D}{(d_1 - d_2)} = DR$

$VV = \frac{2D}{(D - d)} = DR$

$Q = m \,.\, c \,.\, \Delta t$

$m.ww = Q = m.hv$

$P = \frac{Q}{t}$

$\Delta l = l_o \,.\, \alpha \,.\, \Delta t$

$l_f = l_o \pm \Delta l$

$1\ m/s = 3{,}6\ km/h$

$s = u.t + \frac{1}{2} .a.t^2$

$v = u + a.t$

$v^2 = u^2 + 2as$

$\Sigma \uparrow F = \Sigma \downarrow F$

$\Sigma \curvearrowright M = \Sigma \curvearrowleft M$

$P_{ABS} = P_{ATM} + P_{MET}$

$p = \Delta.g.h$

$\frac{1}{R_{PAR}} = \frac{1}{R_1} + \frac{1}{R_2} + \ldots + \frac{1}{R_n}$

$R_{SER} = R_1 + R_2 + \ldots + R_n$

$R = \frac{\rho \,.\, l}{a}$

ENGINEERING

Copyright reserved

higher education & training

Department:
Higher Education and Training
REPUBLIC OF SOUTH AFRICA

MARKING GUIDELINE

NATIONAL CERTIFICATE

APRIL EXAMINATION

ENGINEERING SCIENCE N2

1 APRIL 2014

This marking guideline consists of 9 pages.

Copyright reserved

QUESTION 1

1.1
- It can make a stationary object move ✓
- It can bring a moving object to a standstill ✓
- It can change the direction of a moving object ✓

(3)

1.2 1.2.1

$$a = \frac{\Delta v}{\Delta t}$$

$$a = \frac{v - u}{t}$$

$$a = \frac{25 - 0}{10} \checkmark$$

$$a = 2{,}5 m/s^2 \checkmark$$

(3)

1.2.2 S = area triangle + area rectangle

= (0.5 x 10 x 25) + (15 x 25) ✓

= 125 + 375 ✓

= 500 m ✓

(3)

1.2.3 $\bar{v} = \frac{s_{tot}}{t_{tot}}$

$= \frac{500}{25}$ ✓

= 20 m/s ✓

(2)

1.3 1.3.1 V = u + at

$t = \frac{v - u}{a}$

= 0 – 70 ✓

= 28 sec ✓

(2)

Copyright reserved

1.3.2 $S = ut + \frac{1}{2}at^2$

$= 70 \times 28 + \frac{1}{2}(-2.5)28^2$ ✓

$= 980$ m ✓

OR

$S = \frac{V^2 - U^2}{2a}$

$= \frac{(0)^2 - (70)^2}{2(-2.5)}$

$= 980$ m

(2)
[15]

QUESTION 2

2.1 2.1.1 Sum of clockwise moments = sum of anticlockwise moments

Take moments around L

$R \times 12 = (270 \times 3) + (180 \times 9 + (300 \times 13.5)$ ✓

$12R = 810 + 1620 + 4050$ ✓

$R = 540$ N ✓

Sum of clockwise moments = sum of anticlockwise moments

Take moments around R

$L \times 12 + (300 \times 1.5) = (180 \times 3) + (270 \times 9)$ ✓

$12L + 450 = 540 + 2430$ ✓

$L = 210$ N ✓

(6)

2.1.2 upwards forces = downwards forces

$L + R = 270 + 180 + 300$

750 N = 750 N ✓

(1)

2.2 The resultant of a system of forces is the single force that will replace the system of force and still has the same effect. (2)

2.3 Tap ✓
Stocks and die
Wheel spanner
Wingnut

(Any 1) (1)
[10]

Copyright reserved

QUESTION 3

3.1 Kinetic energy is the energy a body possesses due to its mass and velocity. (2)

3.2 3.2.1 $Ek = 0.5 \times m \times v^2$

$= 0.5 \times 5.4 \times 10^2$ ✓

$= 225$ Joules ✓ (2)

3.2.2 $v^2 = u^2 + 2as$

$s = v^2 - u^2/2a$

$= 100/19,6$ ✓

$= 5.102$ m ✓

$s = \frac{V^2 - U^2}{2g}$

$= \frac{(0)^2 - (10)^2}{2(-9,8)}$

$= 5,102$ m (2)

3.2.3 $P = m \times v$

$= 4.5 \times 10$ ✓

$= 45$ kg.m/s ✓ (2)

[8]

QUESTION 4

4.1 Power delivered at a rate of 1 J/s (1)

4.2 4.2.1 $W = w \times L$

$= 120 \times 120$

$= 2400$ N ✓ (1)

4.2.2

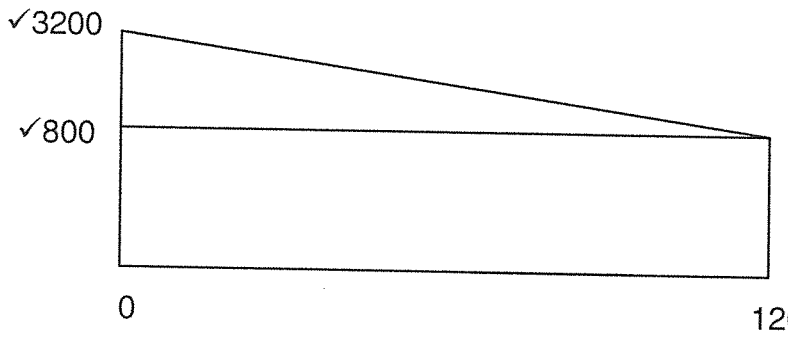

(2)

Copyright reserved

4.2.3 $W_{total} = W_{triangle} + W_{rectangle.}$

$= (0.5 \times 120 \times 2400) + (800 \times 120)$ ✓

$= 240000$ J ✓

$= 240$ KJ ✓ (3)

4.3 $T = F \times r$

$= 1800 \times 0.2$ ✓

$= 360$ Nm ✓

$r = D/2$
$= 0.4/2$
$= 0.2$ m ✓ (3)
[10]

QUESTION 5

5.1
- Belts tend to slip ✓
- Belt drives use a lot of space ✓
- The torque on belt drives is limited
- Belts tend to stretch
- Belt drives have a short life span

(Any 2) (2)

5.2 5.2.1 $T_A \times N_A = T_B \times N_B$

$150 \times N_A = \frac{200 \times 50}{150}$ ✓

$N_A = 66,667$ r/s ✓ (2)

5.2.2 $T_C \times N_C = T_D \times N_D$ $N_B = N_C = 50$ r/s

$T_C \times 50 = \frac{20 \times 40}{50}$

$T_C = 16$ teeth (2)

5.3 5.3.1 $v = \pi Dn$

$v = \pi \times 0,25 \times 35$ ✓

$v = 27,489$ m/s ✓ (2)

5.3.2 $T_1 = 4T_2$

$T_1 = 4 \times 500$ ✓

$T_1 = 2\,000$ N✓ (2)

Copyright reserved

5.3.3 $P_O = Fe \times V$

$= (T1 - T2) \times V$

$= (2\,000 - 500) \times 27{,}489$ ✓

$= 41\,233$ W

Po = 41,233 kW ✓ (2)

5.4 Pascal's Law states that when pressure is exerted on the surface of a liquid, this force is transmitted with the same magnitude✓ through the liquid in all directions.✓ (2)

5.5 $P = pgh$

$p = \frac{1.400\,000}{9.8 \times 120}$ ✓

$p = 1\,190{,}476$ kg/m^3 ✓ (2)

5.6 $P_{ab} = P_{atm} + P_g$

$= 101{,}3$ kPa + 1 400 kPa

Pab = 1 501,3 kPa ✓ (1)

[17]

QUESTION 6

6.1
- Smoothen surface ✓
- Use lubricant
- Use bearings

(Any one) (1)

6.2 6.2.1 $W \cos 30^0 = 10 \times 9{,}8 \times \cos 30^0$

$= 84.87$ N (2)

6.2.2 $W \sin 30^0 = 10 \times 9.8 \times \sin 30^\circ$

$= 49$ N ✓ (2)

6.2.3 $Fu = u \times W \cos 30^0$

$= 0.25 \times 84.87$

$= 21.218$ N (2)

Copyright reserved

6.2.4 $F_{up} = F_u + W \sin 30^0$

$= 21.218 + 49$

$= 70.218$ N (2)

[9]

QUESTION 7

7.1 The amount of heat energy (in joules) required to heat a body with a mass of 1kg at a temperature of 1^0C (1)

7.2 7.2.1 $Q = m \times HV$

$= 50 \times 30$

$= 1500$ MJ/hr (2)

7.2.2 $P_{out} = \frac{1500 \times 10^6}{3600}$

$= 416666.66$ watts (2)

7.2.3 $Q = m \times c \times \Delta t$

$m = \frac{41666.67}{4187 \times 80}$

$= 1.244$ kg/sec x 3600

$= 4478.4$ kg/hr (2)

7.3 $\Delta L = L_0 \times \infty \times \Delta t$
$\Delta L = 10\,000 \times 0{,}000\,017 \times 180$ ✓
$= 30{,}6$ mm ✓ (2)

7.4 7.4.1 Saturated temperature (1)

7.4.2 Superheated temperature (1)

[11]

Copyright reserved

QUESTION 8

8.1 When an atom gains or loses one or more electrons it is said to be ionised negative or positive charge. It is referred to as an ion. ✓ (1)

8.2 When electrons are removed or lost ✓ (1)

8.3 Protons ✓ – positive ✓
Electrons ✓– negative ✓
Neutrons ✓– neutral ✓ (6)
[8]

QUESTION 9

9.1 9.1.1 $Rp = \frac{Ra \times Rb}{Ra + Rb}$

$= \frac{6 \times 24}{6 + 24}$ ✓

$= 4.8\ \Omega$ ✓ (2)

9.1.2 $Rtot = Rp + R_3$

$= 4.8 + 19$ ✓

$= 23.8\ \Omega$ ✓ (2)

9.2

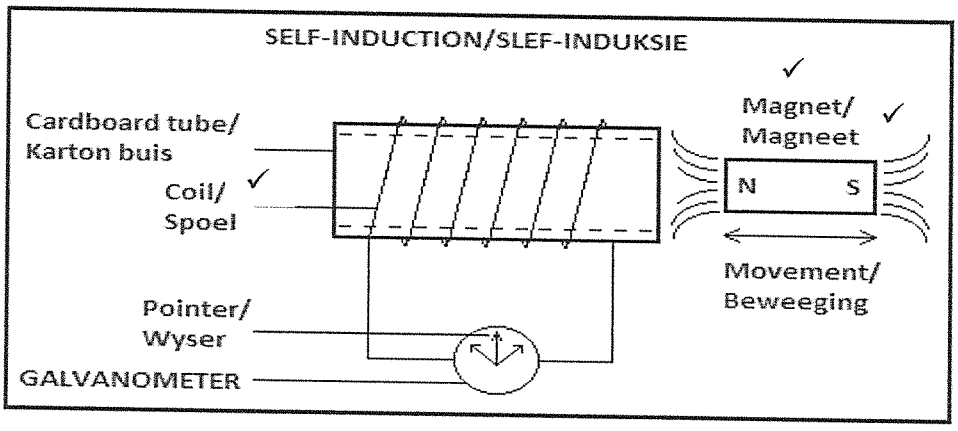

(3)

9.3 Transformers ✓
Generators ✓
Generate ignition spark (Any 2) (2)

Copyright reserved

9.4 $R = \frac{p \times l}{A}$

$1.2 = \frac{0.000000028 \times l}{80 \times 10^{-6}}$

$l = \frac{1.2 \times 80 \times 10^{-6}}{0.000000028}$

$= 3428.57 \text{ m}$ (2)

9.5 False (1)
[12]

TOTAL: 100

Copyright reserved