higher education & training

Department:
Higher Education and Training
REPUBLIC OF SOUTH AFRICA

MARKING GUIDELINE

NATIONAL CERTIFICATE

NOVEMBER EXAMINATION

ENGINEERING SCIENCE N1

24 NOVEMBER 2016

This marking guideline consists of 11 pages.

Copyright reserved

QUESTION 1

1.1
1.1.1 True
1.1.2 False
1.1.3 False
1.1.4 False
1.1.5 True

(5 × 1) (5)

1.2 $Velocity = 42 + 3,2$ ✓
$Velocity = 45,2\ m/s; North\ west$ ✓

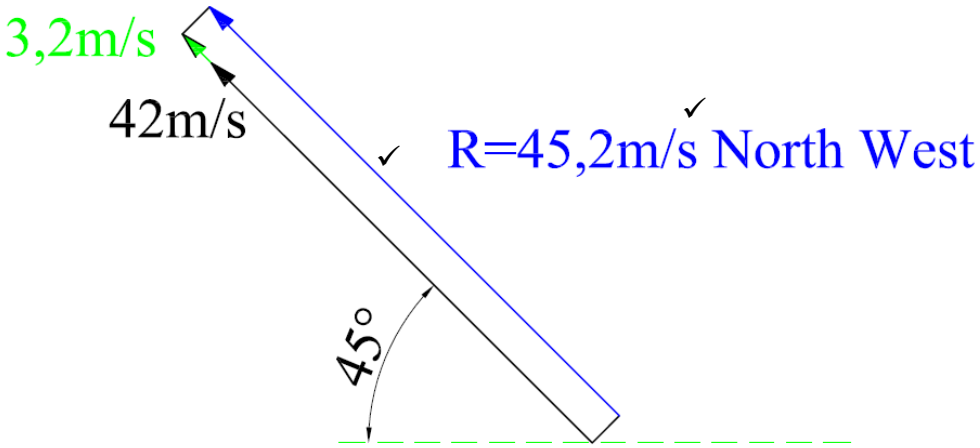

(Analytical or graphical method can be taken as correct) (2)

1.3 1.3.1

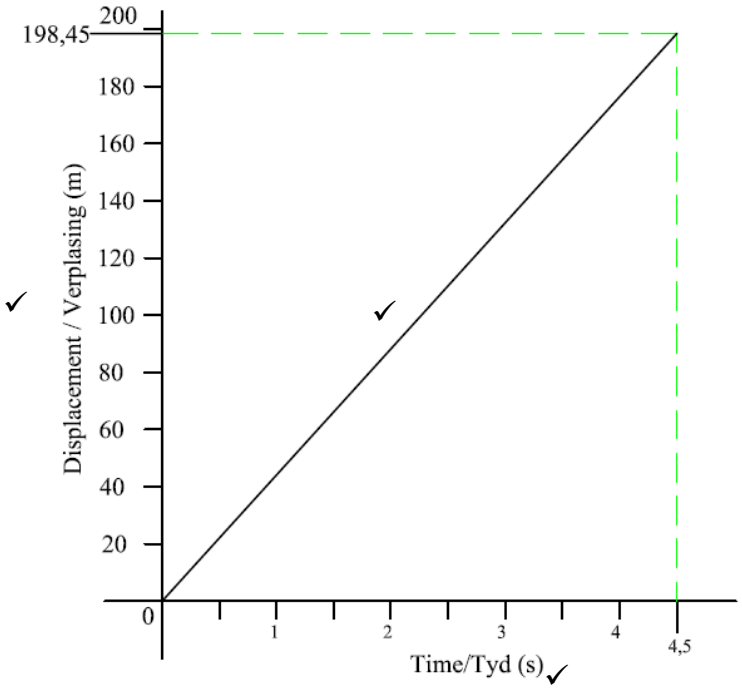

(3)

1.3.2
$$Slope = \frac{Displacement}{Time}$$
$$Slope = \frac{198,45}{4,5}$$
$$\underline{Slope = 44,1m/s} \checkmark$$
(1)

1.3.3 Average velocity (1)

1.4
$$t_1 = \frac{s}{v} = \frac{2}{6} = 0,333h$$
$$t_2 = \frac{s}{v} = \frac{2}{16}0,125h$$
$$t_3 = \frac{s}{v} = \frac{1}{32} = 0,0313h$$
$$t_{ave} = t_1 + t_2 + t_3$$
$$t_{ave} = 0,333 + 0,125 + 0,0313$$
$$\underline{t_{ave} = 0,4893h} \checkmark$$

$$v_{ave} = \frac{s}{t_{ave}}$$
$$v_{ave} = \frac{5}{0,4893}$$
$$\underline{v_{ave} = 10,219m/s} \checkmark$$

(2)
[14]

QUESTION 2

2.1
2.1.1 C
2.1.2 D
2.1.3 A
2.1.4 D
2.1.5 C

(5 × 1) (5)

2.2 2.2.1

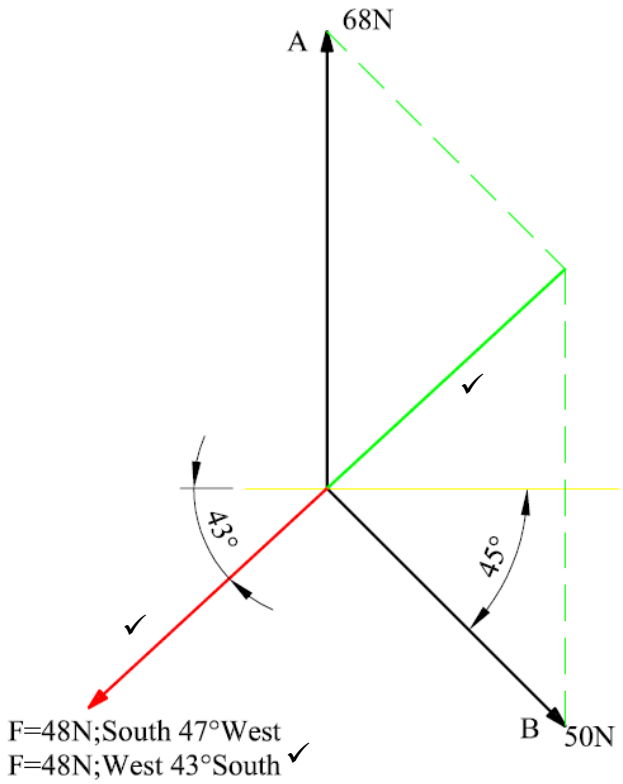

OR

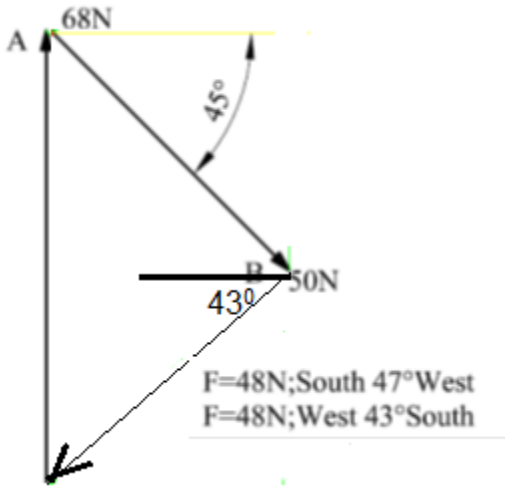

OR

Plane mirror reflection of this (3)

2.2.2 Equilibrant (1)

2.3 2.3.1

$$MA = \frac{L}{E}$$

$$MA = \frac{320 \times 9,8}{500}$$

$$\underline{MA = 6,272} \quad ✓$$

2.3.2

$$VR = \frac{L}{l}$$

$$VR = \frac{1,12}{0,521} \qquad VR = \frac{s_E}{s_L}$$

$$\underline{VR = 2,150} \quad ✓$$

(2 × 1) (2)

2.4

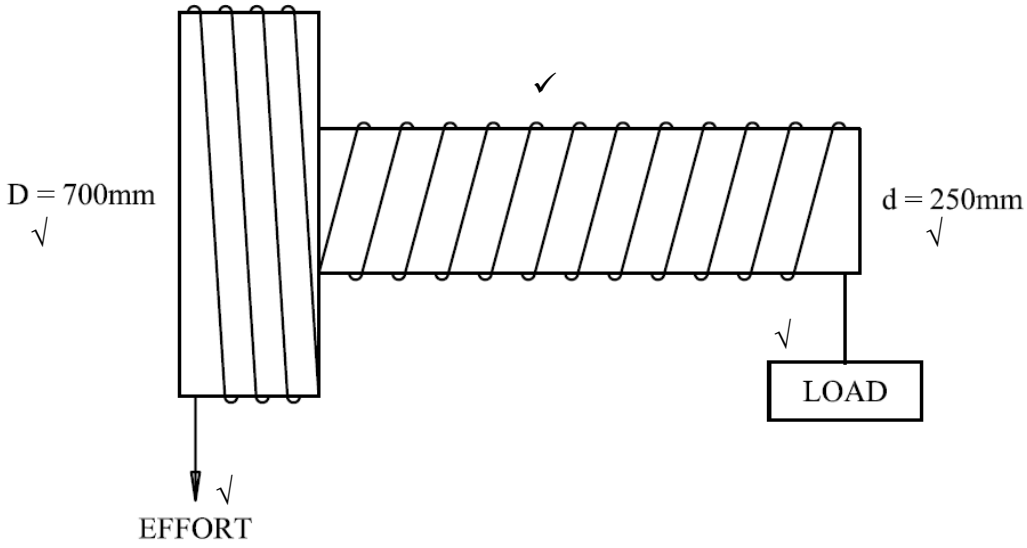

OR

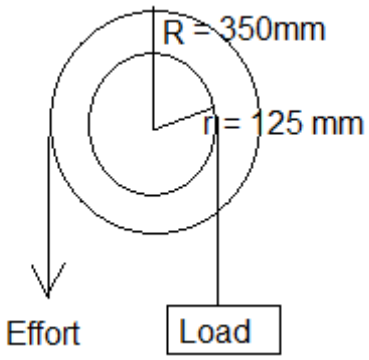

(3)

2.5 $LM = RM$

$$350 \times 3 = 225 \times L$$

$$L = \frac{350 \times 3}{225} \quad ✓ \qquad \sum ACWM = \sum CWM$$

$$\underline{L = 4,667m} \quad ✓$$

(2)

2.6 $\Gamma(torque) = F.r$

$\Gamma(torque) = 450 \times 0{,}32$ ✓

$\Gamma(torque) = 144 N.m$ ✓

(2)
[18]

QUESTION 3

3.1 3.1.1 Kinetic energy
3.1.2 Atomic/chemical energy
3.1.3 Heat energy
3.1.4 Electric energy
3.1.5 Potential energy

(5 × 1) (5)

3.2 3.2.1 Chemical energy to electrical energy

3.2.2 Kinetic energy to electrical energy

(2 × 1) (2)

3.3 3.3.1 $t = 25\ x\ 60 = 1500\ s$

$v = \frac{100}{3.6} = 27.78\ m/s$

$s = vt$

= 27.78 × 1500

= 41670 m ✓

$W = Fs$

= 920 × 41670

= 38336400 J

= 38.34 × 10^6 J = 38.34 MJ ✓

(2)

3.3.2 $P = \frac{W}{t}$

$= \frac{38336400}{1560}$ ✓

= 25557,6 W = 25,56 KW

OR

$P = Fv$

= 920 * 27,78

=25557,6 W = 25,56 KW

(1)

3.4

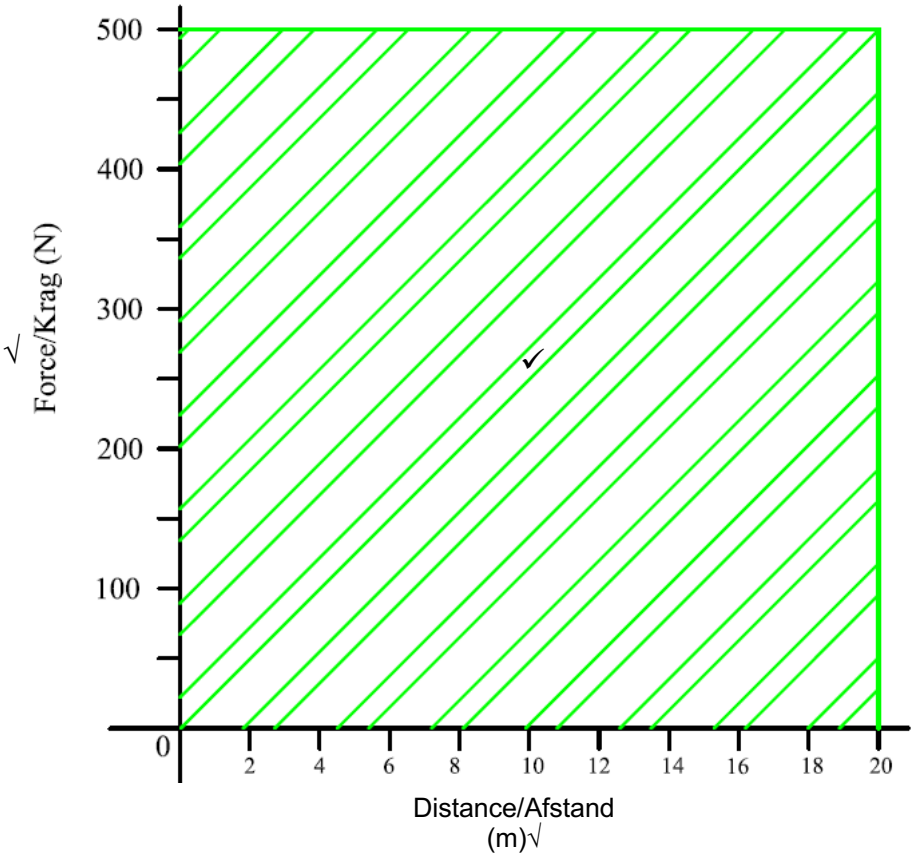

(2)
[12]

QUESTION 4

4.1
4.1.1 Temperature
4.1.2 Heat capacity
4.1.3 Thermometer
4.1.4 Conduction
4.1.5 Vacuum

(5 × 1) (5)

4.2

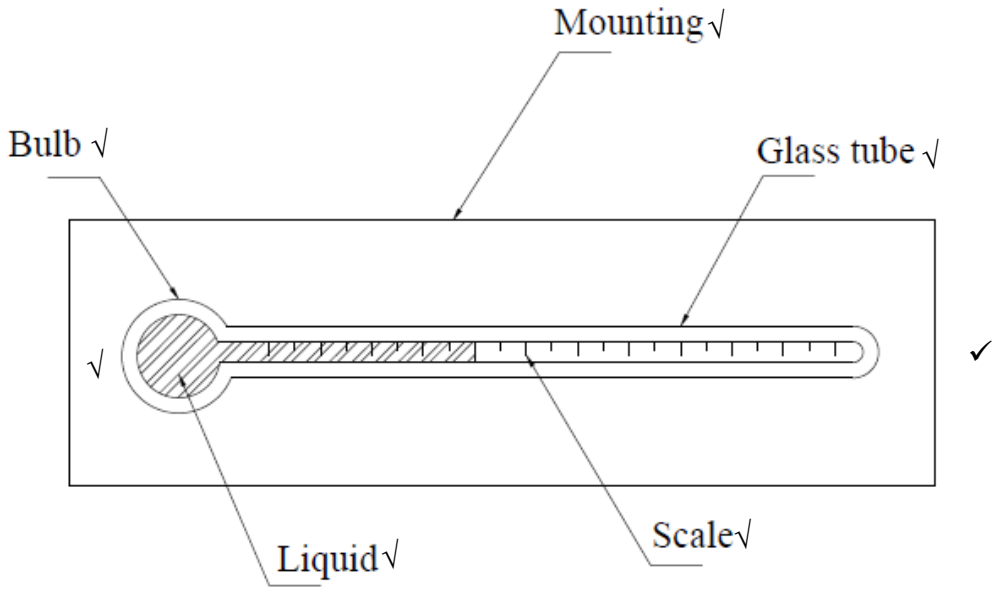

(3)

4.3 A thermocouple consists of two different types of metals joined at one end and the other end joined electrically (galvanometer).✓ When the joined end is heated a voltage drop is created between the open ends and can be measured with a galvanometer.✓ (2)

4.4 $Q = m.c.(t_f - t_o)$

$t_f = \frac{Q}{m.c} + t_o$ ✓

$t_f = \frac{1{,}5 \times 10^6}{(23 \times 3470)} + 15$ ✓

$\underline{t_f = 33{,}795\ °C}$✓

(3)

4.5 4.5.1 $\Delta t = t_f - t_o$

$\Delta t = 350 - 20$

$\underline{\Delta t = 330\ °C}$ ✓

4.5.2 $\Delta l = l_f - l_o$

$\Delta l = 1{,}3608 - 1{,}36$

$\underline{\Delta l =} \underline{0{,}0008\ m}$ ✓

(2 × 1) (2)

4.6 Because the linear expansion✓ of copper is faster than that of steel, the bi-metallic strip will bend in the direction of the steel.✓ (2)

4.7 Pyrometer (1)

[18]

QUESTION 5

5.1 5.1.1 C
5.1.2 E
5.1.3 A
5.1.4 D
5.1.5 B

(5 × 1) (5)

5.2 5.2.1 Melting/liquidation

5.2.2 Evaporation/vaporisation

(2 × 1) (2)

5.3
- Liquid: Movement of molecules is fast.
- Solid: Movement of molecules is slow. (2)

5.4
- Electron√ – Negative√
- Proton√ – Positive√
- Neutron√ – Neutral√ (½ × 6) (3)

[12]

QUESTION 6

6.1 6.1.1 Conductor
6.1.2 Resistor
6.1.3 Ammeter
6.1.4 Voltage
6.1.5 Alternating

(5 × 1) (5)

6.2

CONDUCTORS	ISOLATORS
6.2.1 Copper√	6.2.4 Mica√
6.2.2 Zinc√	6.2.5 PVC√
6.2.3 Silver√	6.2.6 Rubber√

(6 × ½) (3)

6.3 6.3.1 Ammeter√
6.3.2 Battery√
6.3.3 Voltmeter√
6.3.4 Open Switch√

(4 × ½) (2)

Copyright reserved

6.4
$$R = \frac{V}{I}$$
$$R = \frac{220}{15,3} \checkmark$$
$$\underline{R = 14,379\Omega} \checkmark$$
(2)

6.5 Heating up of motors,✓ generators✓ and transformers. (Any 2 × 1) (2)

6.6
$$Q = I^2.R.t$$
$$t = \frac{Q}{I^2.R}$$
$$t = \frac{485000}{3,75^2.45} \checkmark$$
$$\underline{t = 766,419s} \checkmark$$
$$\underline{t = 12\min 46,419s}$$
(2)

6.7 6.7.1
$$P = \frac{V^2}{R}$$
$$R = \frac{V^2}{P}$$
$$R = \frac{220^2}{1500} \checkmark$$
$$\underline{R = 32,267\ \Omega} \checkmark$$

6.7.2
$$P = VI$$
$$I = \frac{P}{V}$$
$$I = \frac{1500}{220} \quad \checkmark$$
$$I = 6,818A \quad \checkmark$$

OR

$$I = \frac{V}{R}$$
$$= \frac{220}{32.267}$$
A = 6,818

(2 × 2) (4)

6.8 $R = R_1 + R_2 + R_3$

$R = 23{,}5 + 63 + 12{,}4$ ✓

$\underline{R = 98{,}9\Omega}$ ✓ (2)

6.9
- Temperature
- Length
- Diameter
- Type (resistivity) (Any 2 × 1) (2)

6.10

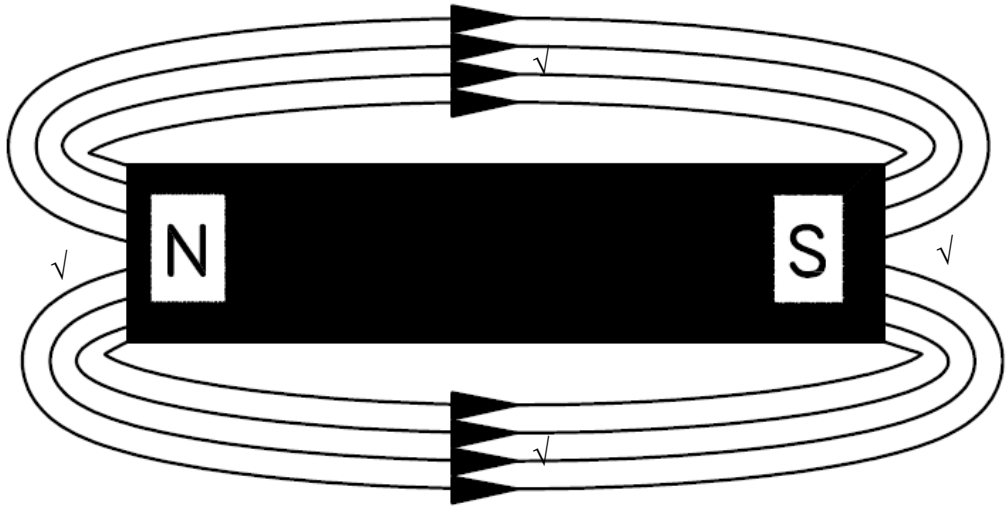

(2)
[26]

TOTAL: 100

Copyright reserved