higher education & training

Department:
Higher Education and Training
REPUBLIC OF SOUTH AFRICA

MARKING GUIDELINE

NATIONAL CERTIFICATE

ENGINEERING SCIENCE N1

30 JULY 2019

This marking guideline consists of 12 pages.

Copyright reserved

✓ = 1 mark
√ = ½ mark

SECTION A

QUESTION 1

1.1	1.1.1	Scalar		
	1.1.2	Equilibrant		
	1.1.3	Kinetic energy		
	1.1.4	Temperature		
	1.1.5	Conductor		
			(5 × 1)	(5)
1.2	1.2.1	C		
	1.2.2	A		
	1.2.3	F		
	1.2.4	E		
	1.2.5	D		
			(5 × 1)	(5)
1.3	1.3.1	C		
	1.3.2	B		
	1.3.3	B		
	1.3.4	C		
	1.3.5	D		
			(5 × 1)	(5)
1.4	1.4.1	False		
	1.4.2	True		
	1.4.3	False		
	1.4.4	False		
	1.4.5	False		
			(5 × 1)	(5)
				[20]

TOTAL SECTION A: 20

QUESTION 2: DYNAMICS

2.1

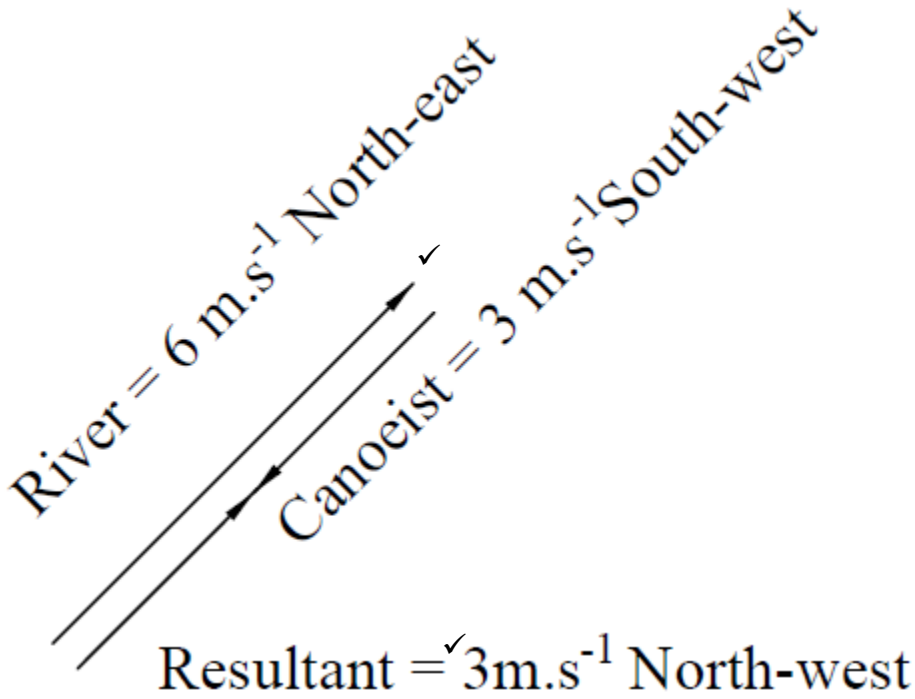

(2)

2.2 2.2.1 A (1)

2.2.2
$$speed = \frac{\Delta s}{\Delta t}$$
$$speed = \frac{(30-0)}{(5-1)}$$
$$\underline{\underline{speed = 7{,}5\ m/s}}$$ ✓ (1)

2.3
$$speed = \frac{s}{t}$$
$$speed = \frac{80}{1{,}167}$$
$$\underline{\underline{speed = 68{,}552\ km/h}}$$ ✓ (1)

2.4
$$F = m.g$$
$$F = 2{,}4 \times 9{,}8$$
$$\underline{\underline{F = 23{,}52N}}$$ ✓ (1)

2.5 2.5.1

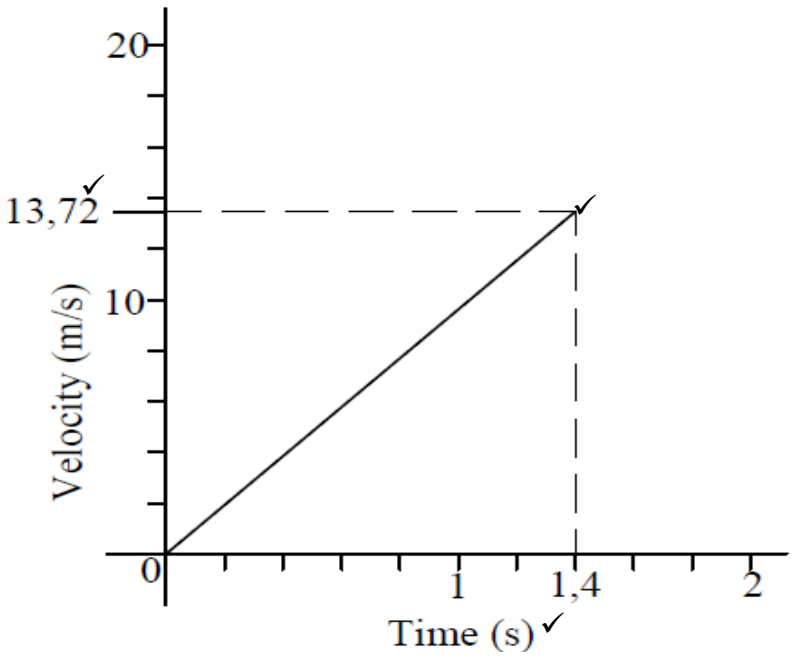

(2)

2.5.2 Gravitational acceleration. (1)

2.6
- Mass of a body is the amount of matter of which a body consists.√
- Weight is the attraction force between a body and the earth.√

(1)

2.7 $w = m.g$

$$m = \frac{w}{g}$$

$$m = \frac{282}{3,711}$$

$$\underline{\underline{m = 75,99\ kg}}\ ✓$$

$$\underline{\underline{m = 76\ kg}}$$

(1)
[11]

QUESTION 3: STATICS

3.1 When three forces are in equilibrium they can be represented by the sides of a triangle in size and direction. (1)

3.2

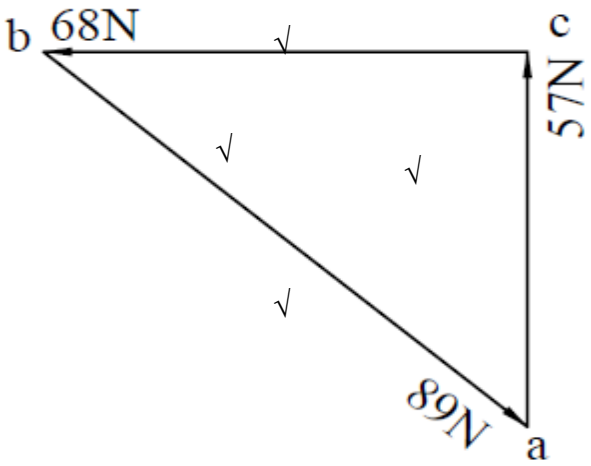

(2)

3.3

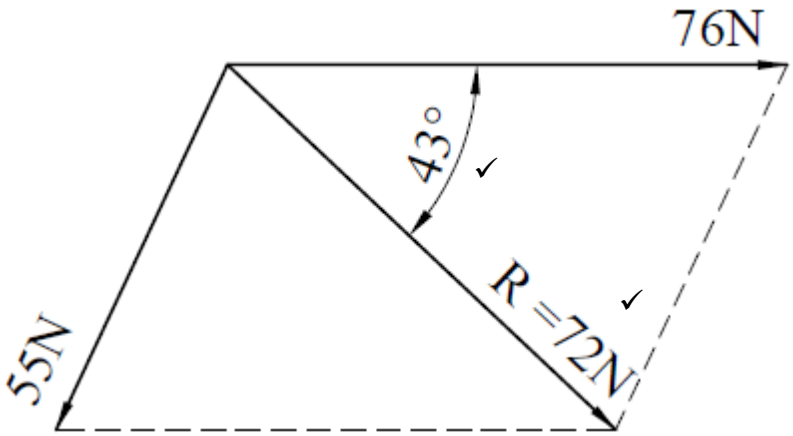

(2)

3.4

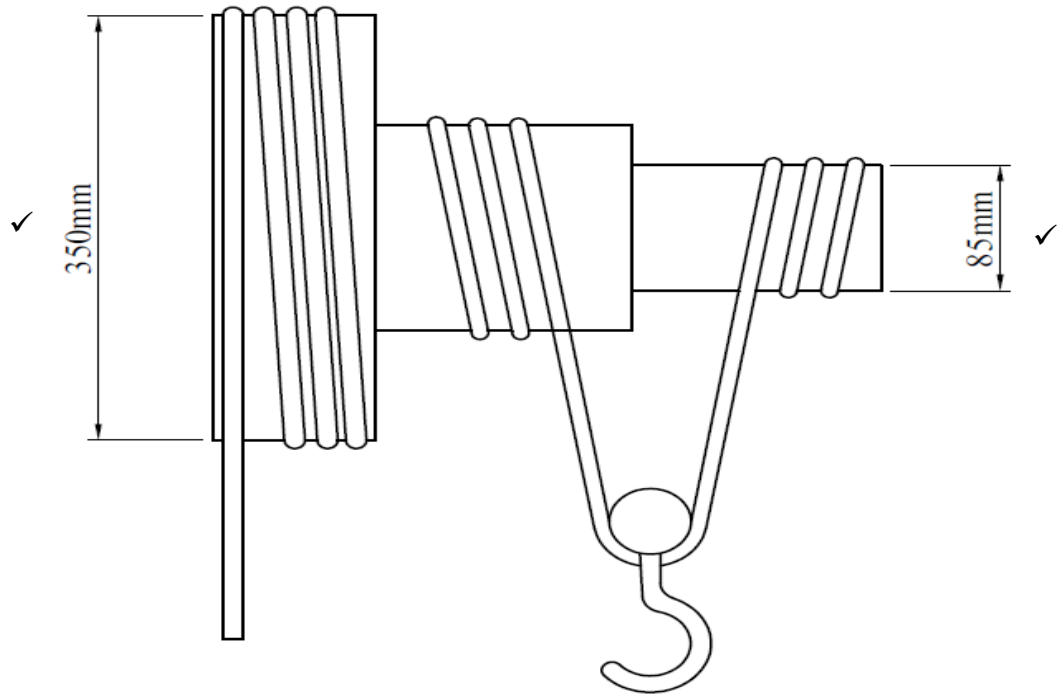

(2)

3.5 3.5.1

$$MA = \frac{W}{F}$$

$$MA = \frac{210 \times 9,8}{425} \checkmark$$

$$\underline{\underline{MA = 4,842}} \checkmark$$

(2)

3.5.2

$$VR = \frac{effort_distance}{load_distance}$$

$$VR = \frac{2}{0.3} \checkmark$$

$$\underline{\underline{VR = 6,667}} \checkmark$$

(2)

3.6

$$T = F.r$$

$$T = 45 \times 0.38 \checkmark$$

$$\underline{\underline{T = 17,1N.m}} \checkmark$$

(2)

3.7 The tendency of a force to cause or change the rotational motion of a body. (1)

[14]

QUESTION 4: ENERGY WORK AND POWER

4.1
- Potential to kinetic
- Electrical to mechanical (Any 1 × 1) (1)

4.2 4.2.1

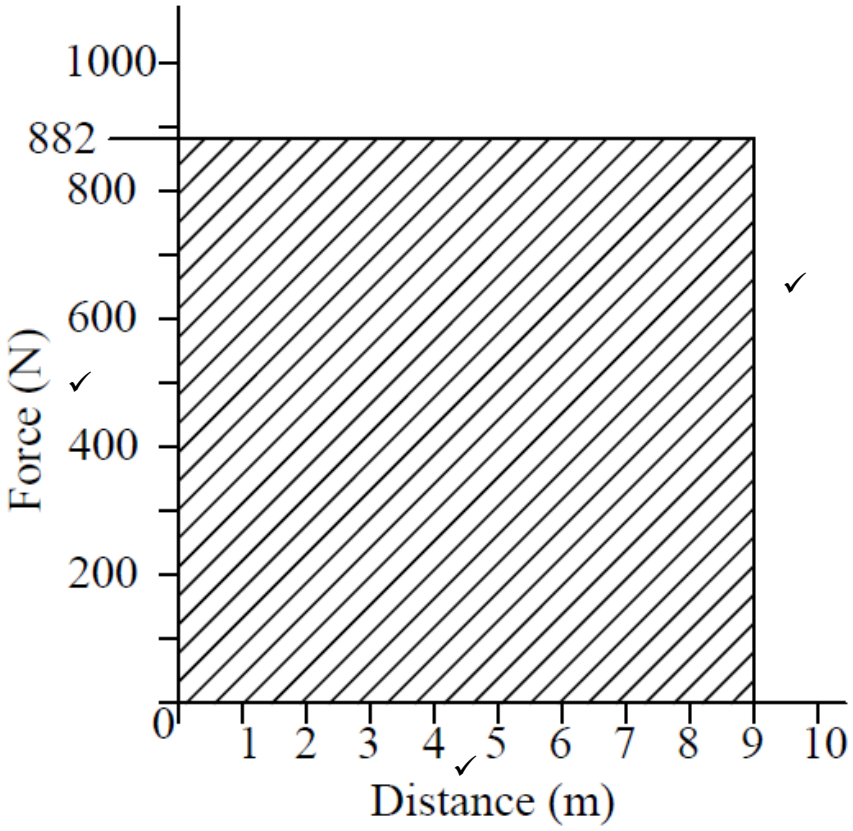

(3)

4.2.2
$$WD = F.s$$
$$WD = (90 \times 9{,}8).(30 \times 0.3)$$
$$\underline{\underline{WD = 7938J}}$$
$$\underline{\underline{WD = 7{,}938kJ}}$$

(1)

4.2.3
$$P = \frac{W}{t}$$
$$P = \frac{7938}{2{,}5 \times 60}$$
$$\underline{\underline{P = 52W}}$$

(1)

4.3 4.3.1
$$WD = F.s$$
$$WD = (500 \times 9{,}8) \times 1\,400$$
$$\underline{\underline{WD = 68\,600\,00J}}$$
$$\underline{\underline{WD = 6{,}86MJ}}$$

(2)

4.3.2 $$P = \frac{W}{t}$$

$$P = \frac{6860000}{1,5 \times 60} \checkmark$$

$$\underline{\underline{P = 76222,222W}}$$

$$\underline{\underline{P = 76,222kW}} \checkmark$$

(2)
[10]

QUESTION 5: HEAT

5.1
- Heat is a form of energy.
- Temperature is an indication of the hotness or coldness of a body. (2)

5.2

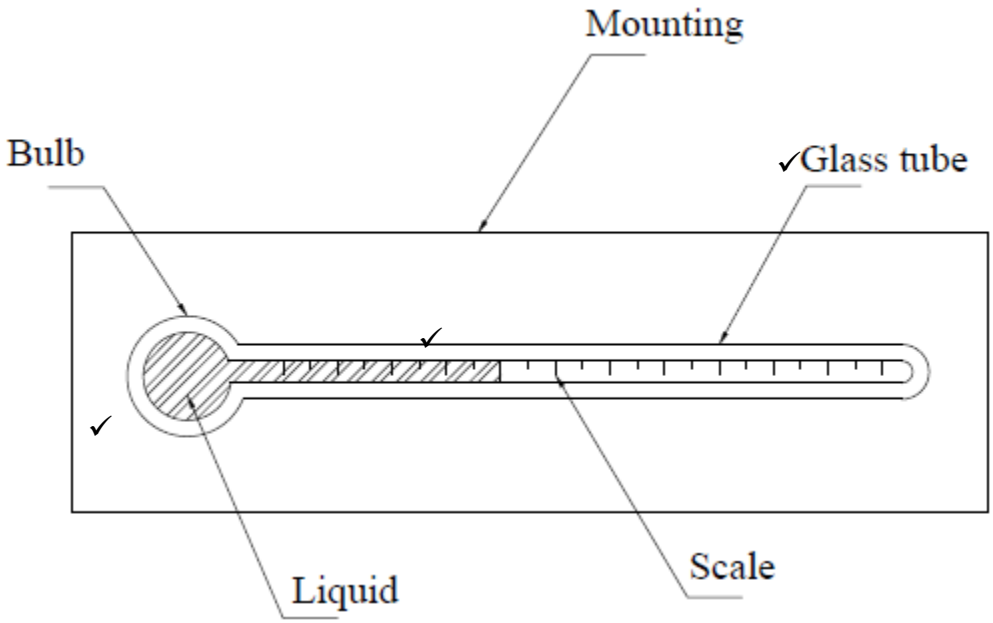

(3)

5.3

ADVANTAGE	DISADVANTAGE
• Quick response to temperature changes	• Can't measure very low temperatures
• Does not adhere to the glass	• Poisonous
• Visible	• Expensive
• High boiling point	
• Expands evenly	
• Good conductor of heat (Any ONE)	(Any ONE)

(2 × 1) (2)

5.4 Liquids – convection
Vacuum - radiation (2)

5.5

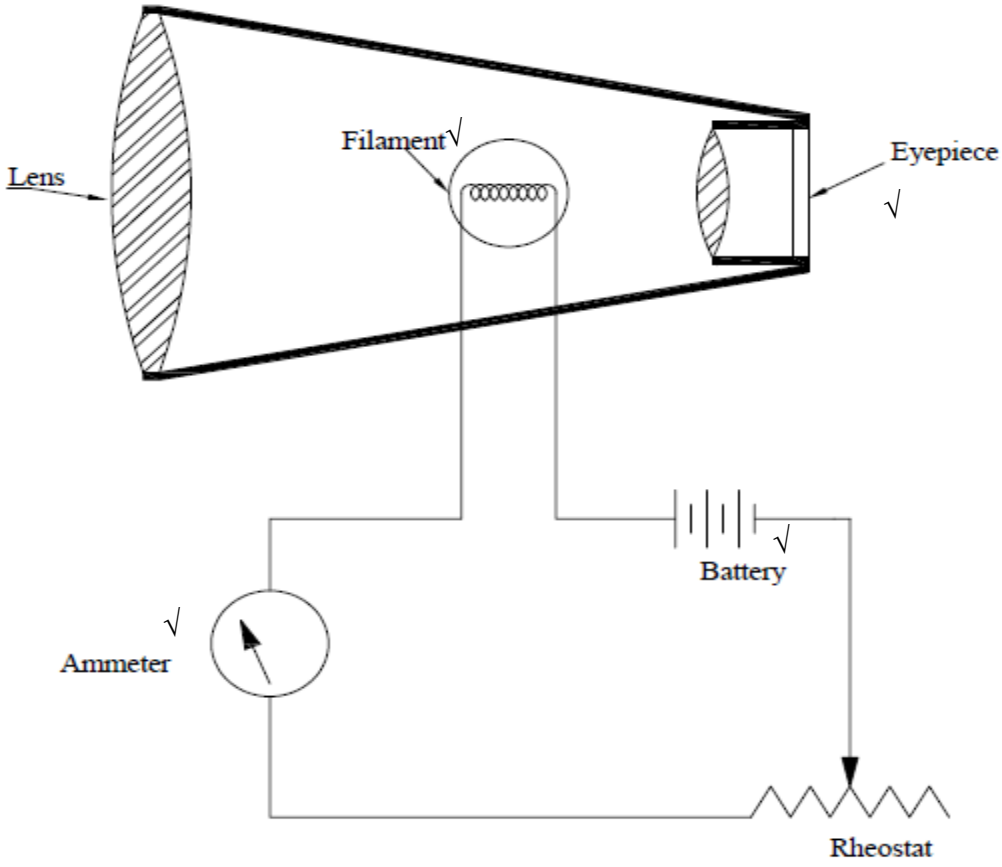

(2)

5.6 $Q = m.c.\Delta t$

$Q = 60 \times 4\ 200 \times (-25 - 25)$✓

$Q = 126\ 000\ 00J$

$\underline{\underline{Q = 12{,}6MJ}}$✓

(2)

5.7 $\Delta L = L_f - L_o$

$\Delta L = 4{,}31 - 4{,}29$

$\underline{\underline{\Delta L = 0{,}02\ m}}$

(2)
[15]

QUESTION 6: PARTICLE STRUCTURE OF MATTER

6.1
- Gas – Steam
- Liquid – Water
- Solid – Ice

(Any correct THREE examples) (3)

6.2

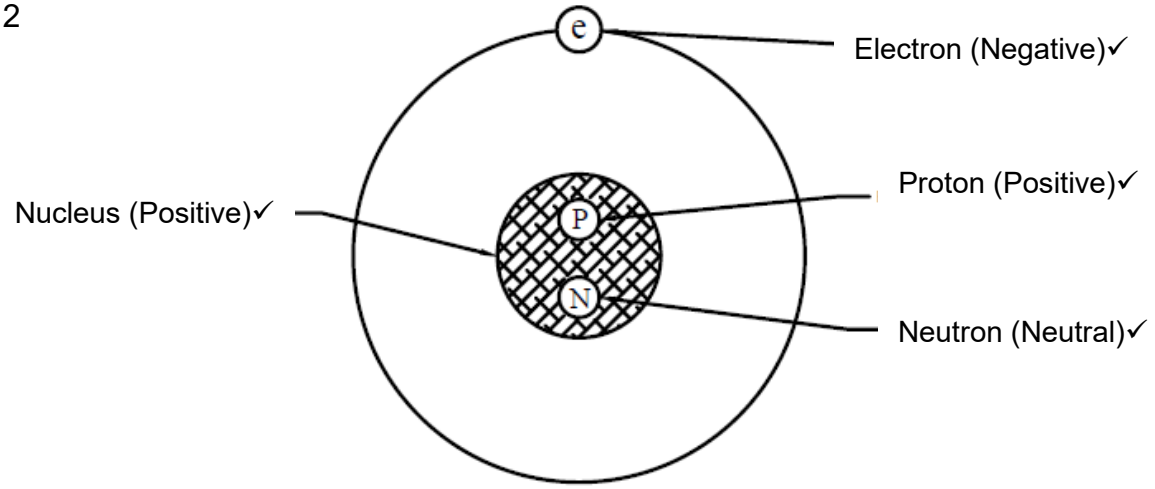

(4)

6.3 When heat is added to water the particles begin to move faster and further apart,✓ until the water changes phase✓ to gas where the particles moves very fast and are far apart.✓ (3)

6.4 The volume increases. (1)
[11]

QUESTION 7: ELECTRICITY

7.1
- Copper
- Silver
- Gold
- Iron

(Any relevant 2 × 1) (2)

7.2
- In direct current the polarity stays the same.
- In alternating current the polarity changes at a certain rate. (2)

7.3 The cross-sectional area which is the dimension of the conductor (1)

7.4
- German silver
- Bronze (2)

7.5 7.5.1

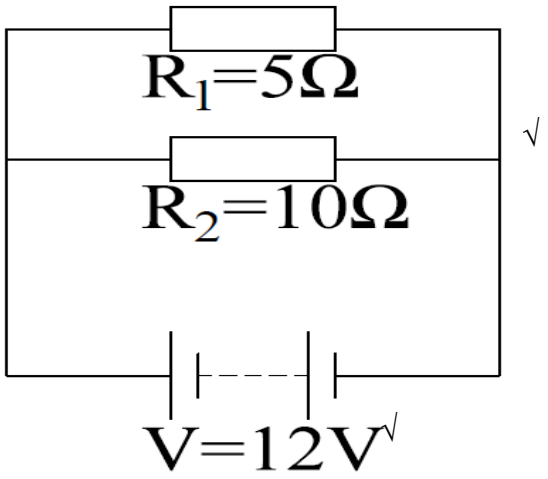

√ √ (1)

7.5.2
$$\frac{1}{R_T} = \frac{1}{R_1} + \frac{1}{R_2}$$
$$\frac{1}{R_T} = \frac{1}{5} + \frac{1}{10} \checkmark$$
$$\underline{\underline{R_T = 3{,}333\Omega}} \checkmark$$
(2)

7.5.3
$$I = \frac{V}{R}$$
$$I = \frac{12}{3{,}333} \checkmark$$
$$\underline{\underline{I = 3{,}6A}} \checkmark$$
(2)

7.5.4

$P = I^2R$
$P = 3{,}6^2 \times 3{,}333$
$\underline{\underline{P = 43{,}195W}}$

OR $P = \frac{V^2}{R}$
$P = \frac{12^2}{3{,}333}$
$\underline{\underline{P = 43{,}204W}}$

OR $P = V.I$
$P = 12 \times 3{,}6$ ✓
✓ $\underline{\underline{P = 43{,}2W}}$

(2)

7.6 The resistivity of a good conductor is low and that of a bad conductor is high. (1)

7.7
$$Q = I^2.R.t$$
$$t = \frac{Q}{I^2.R}$$
$$t = \frac{225\ 000}{5^2 \times 44} \checkmark$$
$$\underline{\underline{t = 204{,}545s}} \checkmark$$
(2)

7.8
- More turns
- Insert core
- Increase current (Any 2 × 1) (2)

[19]

TOTAL SECTION B: 80
GRAND TOTAL: 100

Copyright reserved