higher education & training

Department:
Higher Education and Training
REPUBLIC OF SOUTH AFRICA

NATIONAL CERTIFICATE

ENGINEERING SCIENCE N1

(15070391)

9 April 2020 (X-paper)
09:00–12:00

Nonprogrammable calculators may be used.

This question paper consists of 11 pages and 1 formula sheet.

197Q1A2009

Copyright reserved

DEPARTMENT OF HIGHER EDUCATION AND TRAINING
REPUBLIC OF SOUTH AFRICA

NATIONAL CERTIFICATE
ENGINEERING SCIENCE N1
TIME: 3 HOURS
MARKS: 100

INSTRUCTIONS AND INFORMATION

1. Answer all the questions.
2. Read all the questions carefully.
3. Number the answers according to the numbering system used in this question paper.
4. Start each section on a new page.
5. Answers to calculations must be given correctly to THREE decimal places after the comma.
6. ALL calculations must have the following three steps:
   - 6.1 The formula
   - 6.2 The replacement of values
   - 6.3 The answer and correct SI-unit
7. Gravitational acceleration (g) should be taken as 9,8 $m.s^{-2}$.
8. Use only a black or a blue pen.
9. Sketches must be neatly done in pencil.
10. Write neatly and legibly.

Copyright reserved

SECTION A

QUESTION 1

Various options are given as possible answers to the following questions. Choose the answer and write only the letter (A–D) next to the question number (1.1–1.5) in the ANSWER BOOK.

1.1 A vector can be defined as …

A a physical quantity which has only magnitude.
B the amount of matter a body contains.
C a physical quantity having a magnitude and direction.
D the rate at which a body moves along its path.

1.2 Displacement is ...

A a straight line distance between two points.
B the actual route a body has travelled.
C a physical quantity which has only magnitude.
D the gravitational force acting on a body.

1.3 Mass can be defined as the …

A rate at which a body moves along its path.
B gravitational force acting on a body
C rate of change of velocity.
D amount of matter a body contains.

1.4 A resultant can be defined as …

A the single force which can replace a system of forces and still has the same effect as the system.
B the amount of matter a body contains.
C the single force which brings balance to a system of forces.
D a physical quantity which has only magnitude.

1.5 The mechanical advantage of a lifting machine is the …

A rate of change of velocity.
B ratio between the distance moved by the effort and the distance moved by the load.
C single force which brings balance to a system of forces.
D ratio between the load lifted and the effort applied.

(5 × 1) **[5]**

QUESTION 2

Indicate whether the following statements are TRUE or FALSE by writing only 'True' or 'False' next to the question number (2.1–2.5) in the ANSWER BOOK.

2.1 The moment of a force about an axis is the energy transmitted to the point of rotation by the force.

2.2 Heat capacity is the amount of heat energy required to raise the temperature of 1 kg of a substance with 1 °C.

2.3 Power is the rate of energy used.

2.4 Temperature is a form of energy.

2.5 Chemical energy is stored in the bonds between molecules.

(5 × 1) **[5]**

QUESTION 3

Choose a term from COLUMN B that matches a description in COLUMN A. Write only the letter (A–F) next to the question number (3.1–3.5) in the ANSWER BOOK.

COLUMN A		COLUMN B	
3.1	The particles in this phase is not tightly packed, it has a defined volume and takes the shape of its container	A	conductor
		B	alternating current
3.2	A part of an atom with a negative charge	C	liquid
3.3	Material which is able to conduct electrical current	D	resistivity
3.4	A current that reverses direction at a constant rate	E	electron
		F	insulator
3.5	The resistance between two opposite sides of a unit cube of a material at a certain temperature		

(5 × 1) **[5]**

Copyright reserved

QUESTION 4

Choose a word or words from the following list to match each description below. Write only the answer next to the question number (4.1–4.5) in the ANSWER BOOK

Fleming's right-hand rule for conductors; Fleming's right-hand rule for solenoids; Joule's law; matter; potential difference; atom; power; Ohm's law; resistance

4.1 This opposes the flow of electrical current ?

4.2 The heat generated in an electrical circuit is proportional to the square of the current, the resistance of the circuit and the time during which the current flows

4.3 Anything that has a mass and occupies space

4.4 The smallest part of an element

4.5 When you fold the fingers of your right hand around it, your fingers will show the direction of the magnetic field and your thumb the direction of the current flow.

? (5 × 1) **[5]**

TOTAL SECTION A: 20

SECTION B

QUESTION 5

5.1 Samuel walks from his home to the college which is 120 m away. He then walks back home taking the same path. The total journey takes 4 minutes.

5.1.1 Calculate the distance he covered. (1)

5.1.2 Determine his displacement. ? (1)

5.1.3 Calculate his average speed. (2)

5.1.4 Calculate his average velocity. (2)

Copyright reserved

5.2 The following readings were taken from an experiment with a moving machine part:

Velocity ($m.s^{-1}$)	0	10	20	20	20	20	20
Time (s)	0	5	10	15	20	25	30

5.2.1 Draw a velocity-time graph, using a suitable scale. (3)

5.2.2 Determine the acceleration of the machine part in the first 10 seconds, from the graph you drew for QUESTION 5.2.1. (2)
[11]

QUESTION 6

6.1 A car with a force applied to it moves in a straight line.

Name TWO effects that the force can have on the car. (2)

6.2 Two forces are working in on a body as shown in FIGURE 1.

Determine the resultant force of the system of forces. Use a suitable scale.

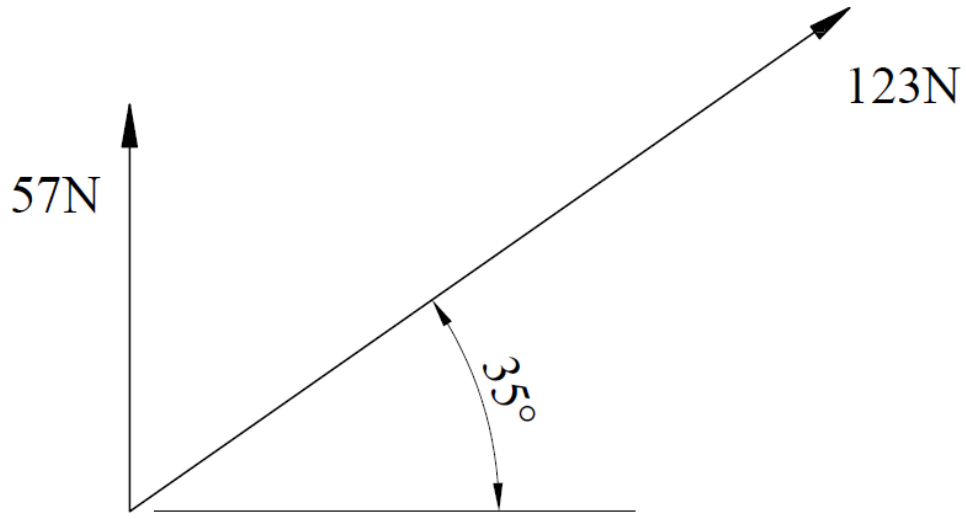

FIGURE 1 (2)

6.3 The forces in FIGURE 2 are in equilibrium.

Determine the magnitude and direction of the unknown force. Use a suitable scale.

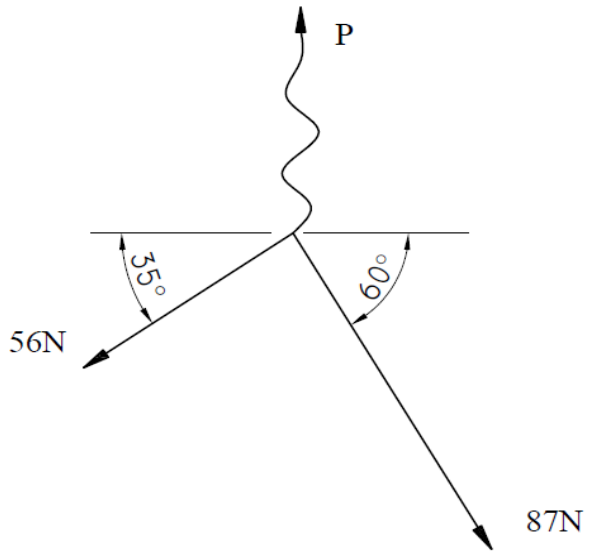

FIGURE 2 (2)

6.4 Make a neat, labelled sketch of a wheel-and-axle lifting machine. The diameter of the wheel is 345 mm and the diameter of the axle is 126 mm. (3)

6.5 The light beam shown in FIGURE 3 is in equilibrium.

Calculate the unkown force B applied on the beam.

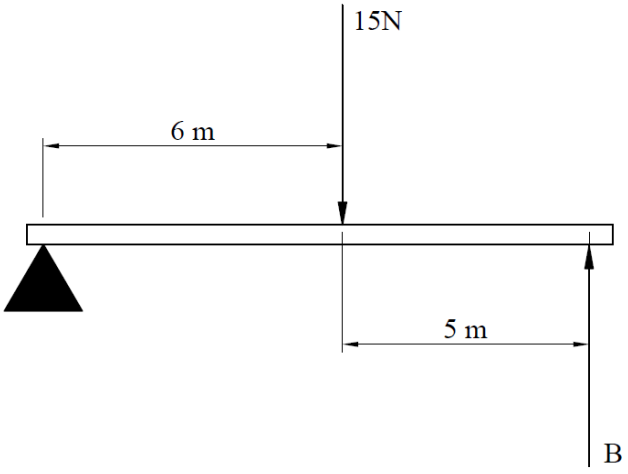

FIGURE 3 (2)

6.6 Give TWO reasons why a force can be regarded as a vector. (2)

6.7 Name TWO practical examples of where a moment of a force is used in the engineering field. (2)

[15]

Copyright reserved

QUESTION 7

7.1 Name the type of energy transfer that takes place in each of the following processes:
(Example: Atomic energy to electric energy)

7.1.1 Switching on an electric fan

7.1.2 A rock falling from a cliff

(2 × 1) (2)

7.2 A hoist with a weight of 5 000 N is lifted through a height of 25 m in a time of 6 seconds.

7.2.1 Draw a neat force or distance graph of the movement.

7.2.2 Calculate the power required for this motion.

(2 × 2) (4)

7.3 Dennis is pushing a go-cart over a distance of 47 m for 2,5 minutes by applying a force of 1 000 N to it.

7.3.1 Calculate the work done by Dennis.

7.3.2 Calculate the power required for this motion.

(2 × 2) (4)
[10]

QUESTION 8

8.1 Thermometers are used to measure temperature.

Name TWO advantages of a mercury thermometer. (2)

8.2 Heat is propagated through different materials in specific ways.

Discuss the method of heat propagation in the following materials:

8.2.1 Solids such as copper

8.2.2 Liquids such as oil

(2 × 1) (2)

8.3 Heat can have different effects on a material.

Write down the effect of heat in the following:

8.3.1 Steel is heated until it glows red.

8.3.2 Two dissimilar metals are joined and heated. A current is measured at the other end.

(2 × 1) (2)

8.4 A steel pipe with a mass of 4 kg is heated from a temperature of -3 °C to 36 °C. The specific heat capacity of steel is 486 J/kg°C.

Calculate the heat energy required to raise the temperature of the steel pipe. (2)

8.5 A water pipe has a length of 21,056 m at a temperature of 2 °C. The temperature of the water rises to 89 °C. The length of the pipe increases with 25 mm.

8.5.1 Calculate the difference in temperature.

8.5.2 Calculate the final length.

(2 × 1) (2)

8.6 A thermometer is used to measure low temperatures.

Draw a neat, labelled sketch of a mercury thermometer. (3)

8.7 A thermocouple is a temperature measuring instrument used to measure temperatures in ovens and furnaces.

Describe the working of a thermocouple. (2)

8.8 A few ice cubes are put in a warm glass of cool drink.

In your own words explain what will happen with the temperature of the cool drink and the temperature of the ice.

Hint: Take the transfer of heat into consideration. (1)
[16]

QUESTION 9

9.1 Complete the table below by writing only the answer next to the question number (9.1.1–9.1.3) in your ANSWER BOOK.

	GAS	LIQUID	SOLID
Energy of particles	High energy	More energy than solid, less than gas	9.1.1
Attraction between particles	9.1.2	More attraction than gas less than solid	Strong attraction
Space between particles	Large spaces	9.1.3	Very little spaces

(3 × 1) (3)

9.2 Draw a neat, labelled sketch of a helium atom.

Hint: Helium has 2 electrons and 2 protons. (3)

9.3 What is the smallest part of a composition called? (1)

9.4 What is it called when an atom loses an electron? (1)
[8]

QUESTION 10

10.1 FIGURE 4 shows a circuit diagram.

Name the components indicated by writing only the answer next to the question number (10.1.1–10.1.3) in the ANSWER BOOK.

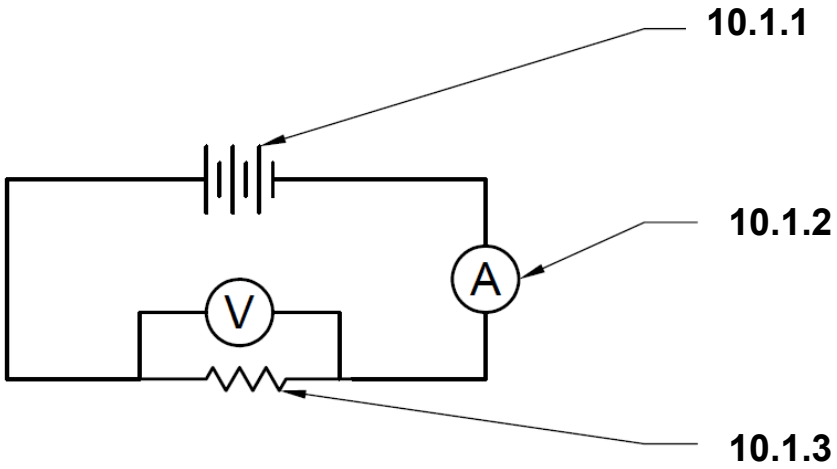

FIGURE 4 (3)

10.2 An electrical toaster has a resistance s of 17 Ω and it is connected to 220 V.

Calculate the current flowing through the toaster. (2)

10.3 Three resistors with values of 15 Ω, 28 Ω and 36 Ω respectively are connected in series.

Calculate the total resistance of the three resistors. (2)

10.4 Name THREE factors that can influence the resistance of a conductor. (3)

10.5 The change in temperature effects the resistance of different materials.

Describe the effect that a decrease in temperature will have on the resistance of the following materials:

10.5.1 Insulators such as PVC

10.5.2 Alloys such as brass

(2 × 1) (2)

10.6 A current of 12 A is flowing in an electric kettle while a supply voltage of 220 V is applied.

Calculate the amount of heat energy generated if the current flows for 5 minutes. (2)

10.7 The following is printed on an incandescent lamp:



Calculate the following:

10.7.1 The current through the lamp

10.7.2 The resistance of the lamp

(2 × 2) (4)

10.8 A property of a solenoid is that a magnetic field exists only while a current is flowing through it.

Name TWO practical examples of where this effect is used in the engineering field. (2)

[20]

TOTAL SECTION B: 80
GRAND TOTAL: 100

Copyright reserved

(15070391)

ENGINEERING SCIENCE N1

FORMULA SHEET

Any applicable formula may be used.

1.	$v = \frac{s}{t}$	
2.	$F = m.g$	
3.	$VV = \frac{M_{afst}}{L_{afst}}$	$DR = \frac{E_{dist}}{L_{dist}}$
4.	$HV = \frac{L}{M}$	$MA = \frac{L}{E}$
5.	$SV = \frac{D}{d}$	$VR = \frac{D}{d}$
6.	$Moment = F.s$	
7.	$T = F.r$	
8.	$W = F.s$	
9.	$P = \frac{W}{t}$	
10.	$P = F.v$	
11.	$Q = m.c.\Delta t$	
12.	$L_f = L_o + \Delta L$	
13.	$L_f = L_o - \Delta L$	
14.	$I = \frac{V}{R}$	
15.	$R_t = R_1 + R_2 + \ldots$	
16.	$\frac{1}{R_t} = \frac{1}{R_1} + \frac{1}{R_2} + \cdots$	
17.	$Heat = I^2.R.t$	
18.	$P = V.I$	
19.	$P = \frac{V^2}{R}$	
20.	$P = I^2.R$	

Copyright reserved