higher education & training

Department:
Higher Education and Training
REPUBLIC OF SOUTH AFRICA

T620**(E)**(A1)T

NATIONAL CERTIFICATE

ENGINEERING SCIENCE N1

(15070391)

1 April 2019 (X-Paper)
09:00–12:00

This question paper consists of 11 pages.

Copyright reserved

DEPARTMENT OF HIGHER EDUCATION AND TRAINING
REPUBLIC OF SOUTH AFRICA

NATIONAL CERTIFICATE
ENGINEERING SCIENCE N1
TIME: 3 HOURS
MARKS: 100

INSTRUCTIONS AND INFORMATION

1. Answer ALL the questions.

2. Read ALL the questions carefully.

3. Number the answers according to the numbering system used in this question paper.

4. Give answers to calculations correctly to THREE decimal places after the comma.

5. ALL calculation must show the following three steps:

   - The formula
   - The replacement of values
   - The answer and correct SI-unit

6. Take gravitational acceleration (g) as 9,8 $m.s^{-2}$.

7. Draw sketches neatly with a pencil.

8. Write neatly and legibly.

Copyright reserved

SECTION A

QUESTION 1

1.1 Choose a description from COLUMN B that matches a word in COLUMN A. Write only the letter (A–G) next to the question number (1.1.1–1.1.5) in the ANSWER BOOK.

COLUMN A		COLUMN B	
1.1.1	Scalar	A	material that prevents the flow of electrical current
1.1.2	Resultant	B	energy a body possesses due to its position or strain
1.1.3	Kinetic energy	C	that single force that will have the same effect as a system of forces
1.1.4	Temperature	D	a physical quantity that have a magnitude but no direction
1.1.5	Insulator	E	the single force that will balance a system of forces
		F	energy a body possesses due to its movement
		G	indication of hotness or coldness of a body

(5 × 1) (5)

1.2 Choose a term for each of the following descriptions from the list below. Write only the term next to the question number (1.2.1–1.2.5) in the ANSWER BOOK.

specific heat capacity; power; displacement ratio; Ohm's law; heat capacity; Lenz's Law; torque; mechanical advantage; work

1.2.1 The current in a closed circuit is directly proportional to the potential difference and inversely proportional to the resistance.

1.2.2 The tendency of a force to cause a change in rotational motion of a body

1.2.3 The quantity of heat required to increase the temperature of 1 kg of a substance by 1 °C

1.2.4 When a force acts on an object and the object moves in the direction of the force

1.2.5 The ratio between the load and the effort of a machine

(5 × 1) (5)

1.3 Indicate whether the following statements are TRUE or FALSE. Choose the answer and write only 'True' or 'False' next to the question number (1.3.1–1.3.5) in the ANSWER BOOK.

1.3.1 Parallelogram of forces is when two pulling forces acting on a point can be represented in magnitude and direction by the two adjacent sides of a parallelogram.

1.3.2 Velocity is the rate at which an object moves in a direction.

1.3.3 Triangle of forces is when three forces are acting on a point that is not in equilibrium; they can be represented in magnitude and direction by the sides of a triangle taken in sequence.

1.3.4 Gravesand's ball and ring is used to prove that metal expands when cooled down.

1.3.5 Liquid particles have less energy than solid particles and more energy than gas particles.

(5 × 1) (5)

1.4 Various options are given as possible answers to the following questions. Choose the answer and write only the letter (A–D) next to the question number (1.4.1–1.4.5) in the ANSWER BOOK.

1.4.1 From the list below, choose the IEC symbol for a variable resistor:

A 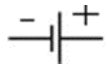

B 

C 

D 

1.4.2 Three resistors with different values are connected in series. Their total resistance will be:

A The value of the largest one
B The value of the smallest one
C The difference between the three
D The sum of the three resistors

1.4.3 Which of the following factors does NOT influence the resistance of a conductor:

A The kind of metal
B The length
C The magnetic field
D The temperature of the conductor

1.4.4 Joule's law states:

A The heat developed when an electric current pass through a conductor is proportional to the resistance, time and square of the current.
B The magnitude of an electrical current is proportional to the potential difference and inversely proportional to the resistance in the circuit.
C The resistance between two opposite sides of a unit cube at a certain temperature.
D The quantity of electrical charge that passes a certain point in a circuit in one second when a current of one ampere is flowing

1.4.5 Which of the following factors will NOT influence the resistivity of a substance:

A Cross-sectional area of the conductor
B The length of the conductor
C The type of the conductor
D The resistance of the conductor

(5 × 1) (5)
[20]

TOTAL SECTION A: 20

SECTION B

QUESTION 2: DYNAMICS

2.1 A ship sails at a velocity of 48 m.s^{-1} due East. The ship experiences a current of 9 m.s^{-1} due West.

2.1.1 Calculate the resultant velocity of the ship.

2.1.2 Determine the direction of the resultant velocity.

(2 × 1) (2)

2.2 Graphically determine the resultant force of the vector diagram in FIGURE 1 below.

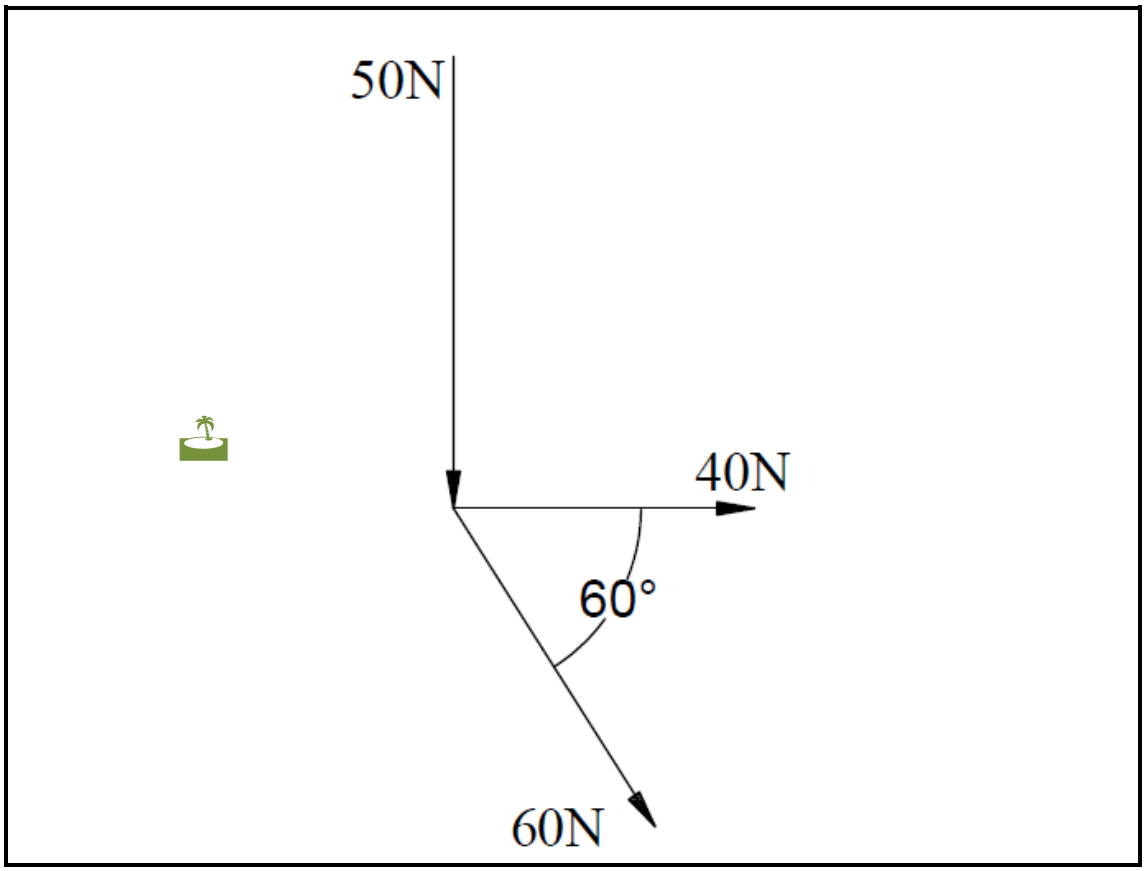

FIGURE 1 (3)

2.3 A brick falls from the top of a building, it takes 2,8 seconds to reach the ground. Assume wind resistance to be negligible.

2.3.1 Use a scale of 2 cm = 1 s and 2 cm = 10 m.s^{-1} to plot a graph for the falling brick. (2)

2.3.2 Calculate the velocity at which the brick strikes the ground. (1)

2.4 In your own words describe the difference between *mass* and *weight*. (2)

2.5 Convert a mass of 165 kg to weight if the gravitational acceleration on the moon is 1.6 $m.s^{-2}$ (1)

2.6 An astronaut's weight is 833 N.

What is his mass on the earth? (1)
[12]

QUESTION 3: STATICS

3.1 A force acting in on a body can have certain effects on that body.

Name TWO of those effects. (2)

3.2 A single rope pulley system has three pulleys in the upper block and two pulleys in the lower block. It lifts a mass of 83 kg vertical upwards through 2,5 m.

3.2.1 Draw a neat, labelled sketch of the pulley system. (3)

3.2.2 Calculate the mechanical advantage of the system if the effort it takes to move the mass is 162 N. (1)

3.2.3 Calculate the distance the effort must move to move the mass 2,5 m. (1)

3.3 FIGURE 2 shows the resultant of two forces of which one is unknown. The resultant of these two forces is 92 N.

Determine the value of the unknown force A and the angle it has with the resultant.

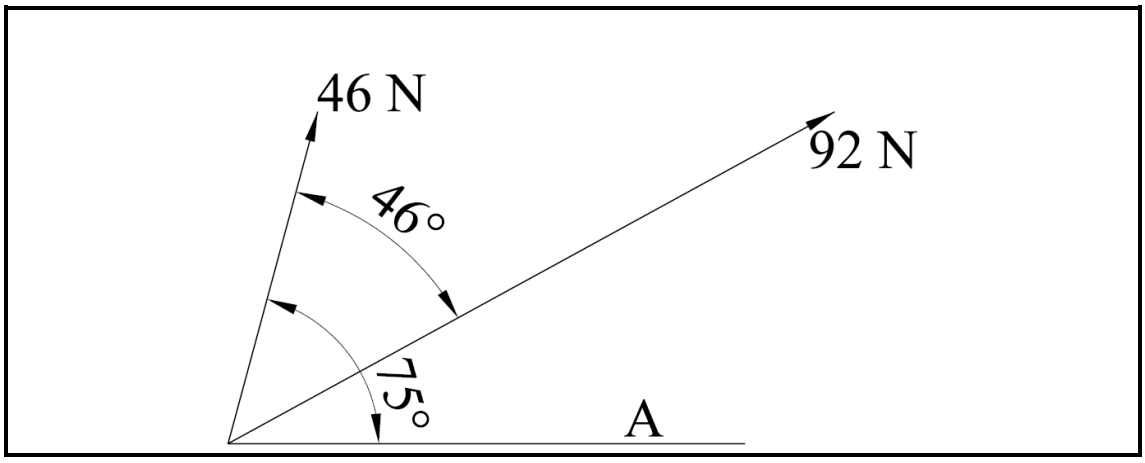

FIGURE 2

(HINT: Use scale 1 N = 1 mm) (2)

3.4 Calculate the magnitude of the unknown force B in FIGURE 3.

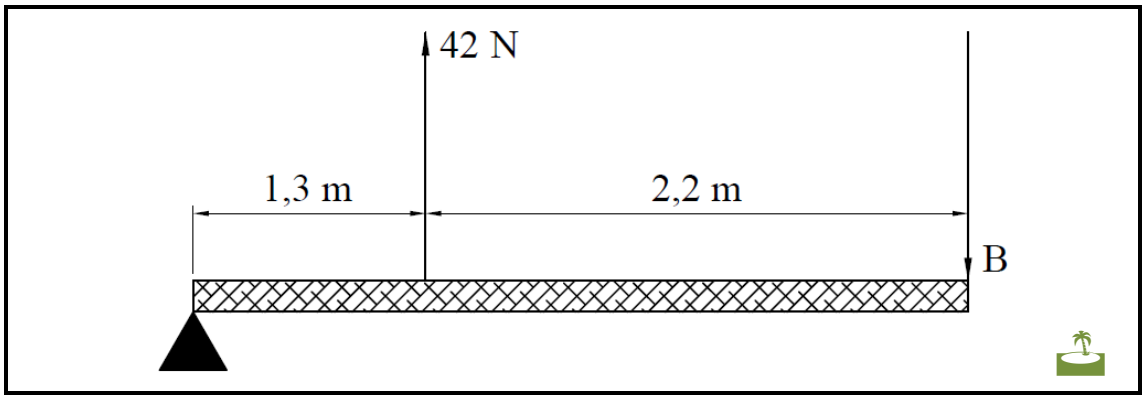

FIGURE 3 (2)

3.5 Name TWO applications of turning moments. (2)
[13]

QUESTION 4: ENERGY, WORK AND POWER

4.1 Describe the energy transformation in the two figures below.
(Example: Heat energy to electrical energy)

4.1.1

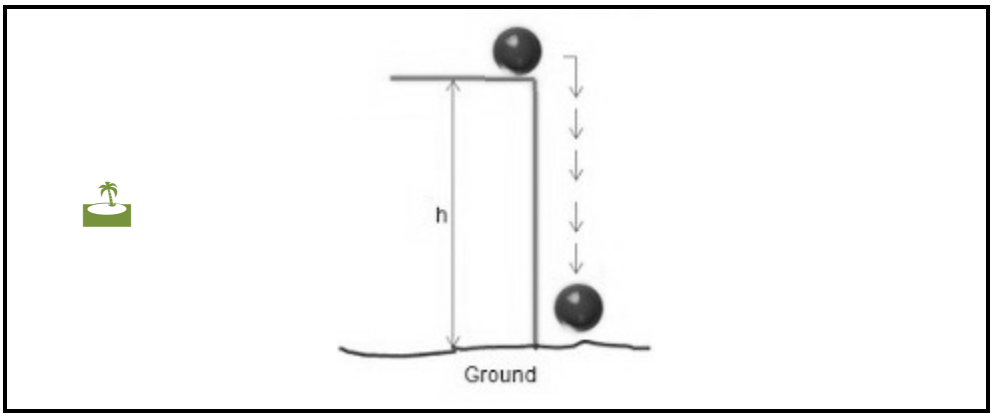

4.1.2

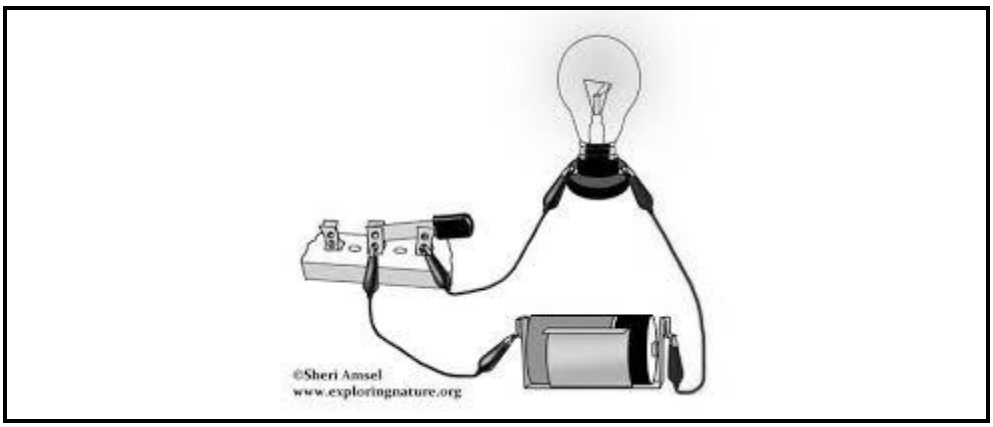

(2 × 1) (2)

4.2 A crane lifts a pallet of bricks to the third level of a building. The bricks have a mass of 200 kg and has been lifted to a height of 6 m.

4.2.1 Draw a force-distance graph of the movement. (3)

4.2.2 Calculate the work done of the movement. (2)

4.3 A motor car travels at a constant speed of 80 km/h. It has a tractive resistance of 2,1 kN.

Calculate the power needed to maintain the speed. (2)

4.4 Define the *law of conservation of energy.* (1)
[10]

QUESTION 5: HEAT AND TEMPERATURE

5.1 Describe the difference between *heat* and *temperature.* (1)

5.2 Draw a neat, labelled sketch of an alcohol thermometer. (3)

5.3 Name TWO advantages of a mercury thermometer. (2)

5.4 A disappearing filament pyrometer (or optical pyrometer) is a measuring instrument that measures high temperatures.

Write down ONE example where such a pyrometer is used. (1)

5.5 During an experiment on an aluminium alloy bar to determine the coefficient of linear expansion, the following results were obtained:

Initial temperature = 15 °C
Initial length = 250 mm
Final temperature = 250 °C
Difference in length = 1,86 mm

5.5.1 Calculate the difference in temperature.

5.5.2 Calculate the final length of the bar.

(2 × 1) (2)

5.6 A kettle contains 1,25 ℓ of water at 18 °C.

Calculate the amount of heat energy required to boil the water at sea level. Take the specific heat capacity of water as 4,184 kJ/kg °C. (2)

5.7 When heat is applied to a substance, it will have certain effects on the substance.

Write down an example where there is a change in colour. (1)

5.8 Heat propagation in substances depends on the phase it is in.

Name the type of heat propagation in a liquid. (1)

5.9 Draw a neat, labelled sketch of a thermocouple. (2)
[15]

QUESTION 6: PARTICLE STRUCTURE OF MATTER

6.1 Heat can change the motion of particles within matter. Heat can also change the phase of matter.

Describe the movement of particles in the following phases:

6.1.1 Solid

6.1.2 Liquid

6.1.3 Gas

(3 × 1) (3)

6.2 Name TWO properties of a solid. (2)

6.3 Draw a neat, labelled sketch of the structure of a hydrogen atom. Indicate the charge of each of the particles. (3)

6.4 Complete the following sentences by filling in the missing word or words. Write only the words next to the question number (6.4.1–6.4.3) in the ANSWER BOOK.

6.4.1 A solid … to form a liquid.

6.4.2 A liquid … to form a gas.

6.4.3 A gas … to form a liquid.

(3 × 1) (3)
[11]

QUESTION 7: ELECTRICITY

7.1 Indicate whether each of the following is a CONDUCTOR or an INSULATOR. Choose the answer and write only 'Conductor' or 'Insulator' next to the question number (7.1.1–7.1.4) in the ANSWER BOOK.

7.1.1 PVC

7.1.2 Bakelite

7.1.3 Bronze

7.1.4 Carbon

(4 × ½) (2)

7.2 Name a source of each of the following types of currents:

7.2.1 Alternating current (AC)

7.2.2 Direct current (DC)

(2 × 1) (2)

7.3 An electric heater with a resistance of 98 Ω is connected to a supply of 220 V.

Calculate the current flow through the heater. (2)

7.4 A circuit consists of three resistors connected in parallel. They are then connected to a battery. The values of the resistors are 35 Ω, 45 Ω and 16 Ω respectively. The battery's value is 12 V.

7.4.1 Calculate the total resistance of the circuit.

7.4.2 Draw the circuit and include an ammeter that would measure the total current.

(2 × 2) (4)

7.5 The resistance of a conductor can be influenced by three main factors.

Discuss how the following factors will influence the resistance of a conductor.

7.5.1 The length of the conductor

7.5.2 The temperature of the conductor

(2 × 1) (2)

7.6 A change in temperature has an influence on the resistance of materials.

Discuss what influence a decrease of temperature will have on an alloy like German silver. (1)

7.7 The heating element of an electrical geyser has a resistance of 21 Ω.

Calculate the amount of heat energy generated when a current of 18 A flows through the element for 15 minutes. (2)

7.8 The filament of an electrical lamp has a resistance of 450 Ω. It is connected to a 220 V power supply.

Calculate the power consumption of the lamp. (2)

7.9 Define *Fleming's right-hand rule*. (1)

7.10 Name ONE practical example where a solenoid is used. (1)

[19]

TOTAL SECTION B: 80
GRAND TOTAL: 100

Copyright reserved