higher education & training

Department:
Higher Education and Training
REPUBLIC OF SOUTH AFRICA

MARKING GUIDELINE

NATIONAL CERTIFICATE

ENGINEERING SCIENCE N1

29 MARCH 2018

This marking guideline consists of 13 pages.

Copyright reserved

✓ = mark
√ = ½ mark

SECTION A

QUESTION 1

1.1	1.1.1	C		
	1.1.2	A		
	1.1.3	D		
	1.1.4	F		
	1.1.5	B		
	1.1.6	E		
			(6 × 1)	(6)
1.2	1.2.1	Matter		
	1.2.2	Atom		
	1.2.3	Heat		
	1.2.4	Heat capacity		
			(4 × 1)	(4)
1.3	1.3.1	True		
	1.3.2	False		
	1.3.3	False		
	1.3.4	False		
	1.3.5	False		
			(5 × 1)	(5)
1.4	1.4.1	C		
	1.4.2	A		
	1.4.3	C		
	1.4.4	D		
	1.4.5	B		
			(5 × 1)	(5)
				[20]

TOTAL SECTION A: 20

SECTION B

QUESTION 2: DYNAMICS

2.1

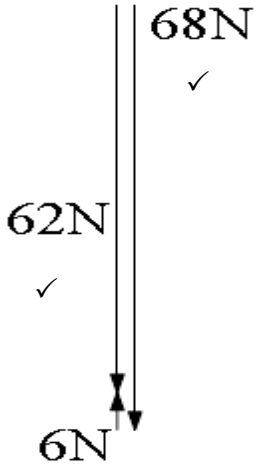

R = 68 N +6 N = 74 N (2)

2.2 2.2.1

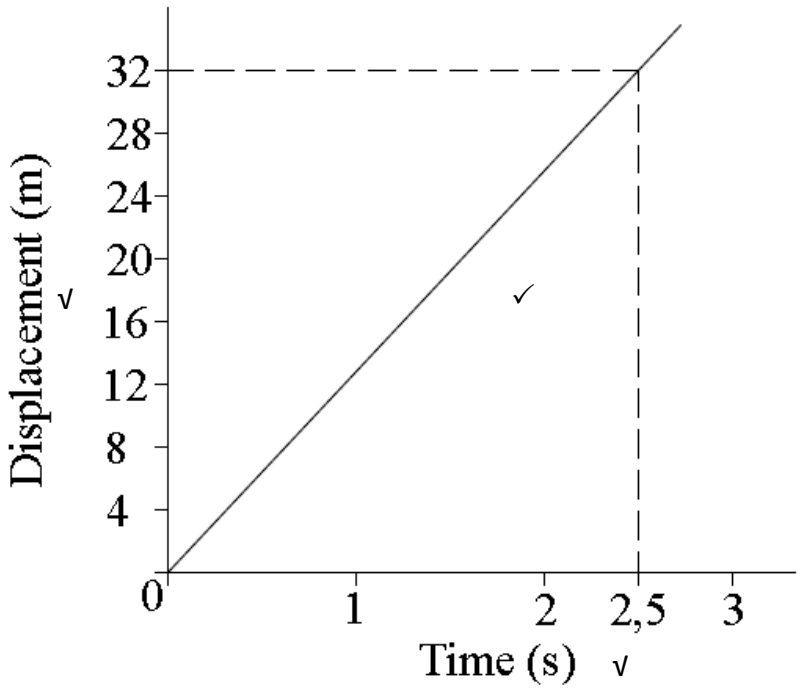

(2)

2.2.2 $v = \frac{\Delta s}{\Delta t}$

$v = \frac{(32-0)}{(2,5-0)}$ √

$\underline{\underline{v = 12,8 m.s^{-1}}}$ √ (1)

2.2.3

$$v = \frac{\Delta s}{\Delta t}$$

$$v = \frac{(32 - 0)}{(2{,}5 - 0)} \quad \surd$$

$$\underline{\underline{v = 12{,}8 m.s^{-1}}} \quad \surd$$

(1)

2.3

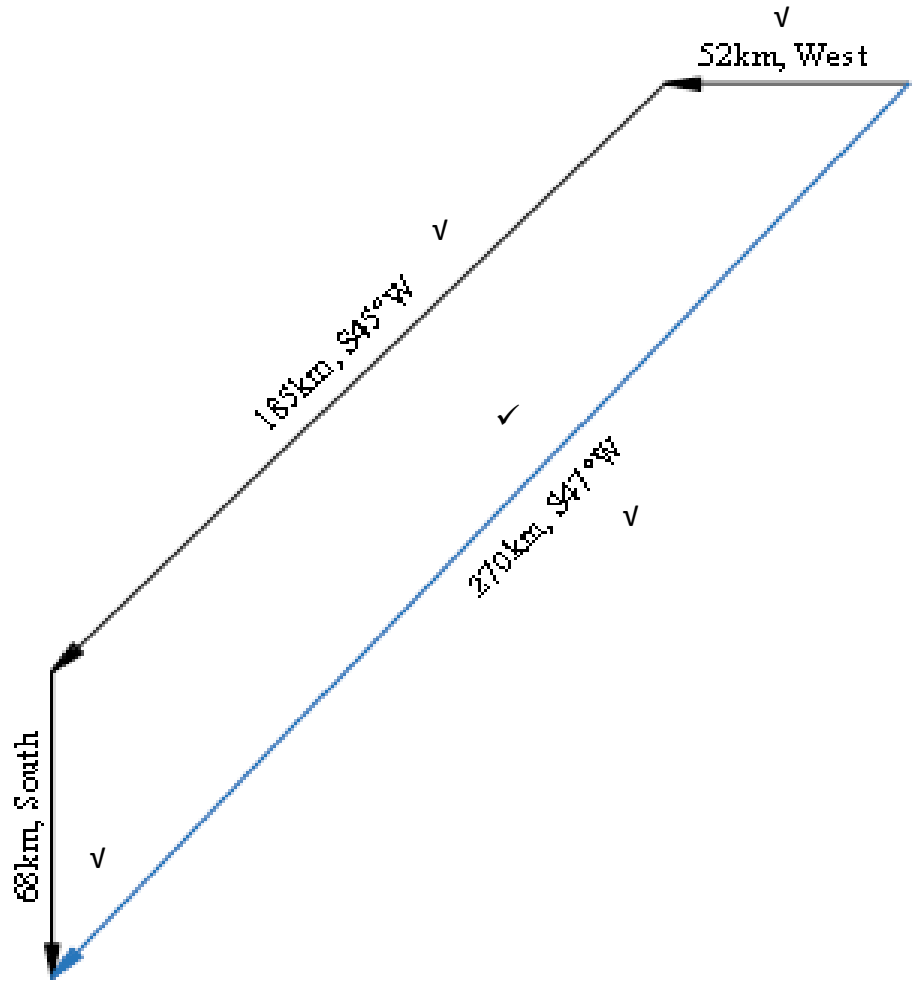

(3)
[9]

QUESTION 3: STATICS

3.1

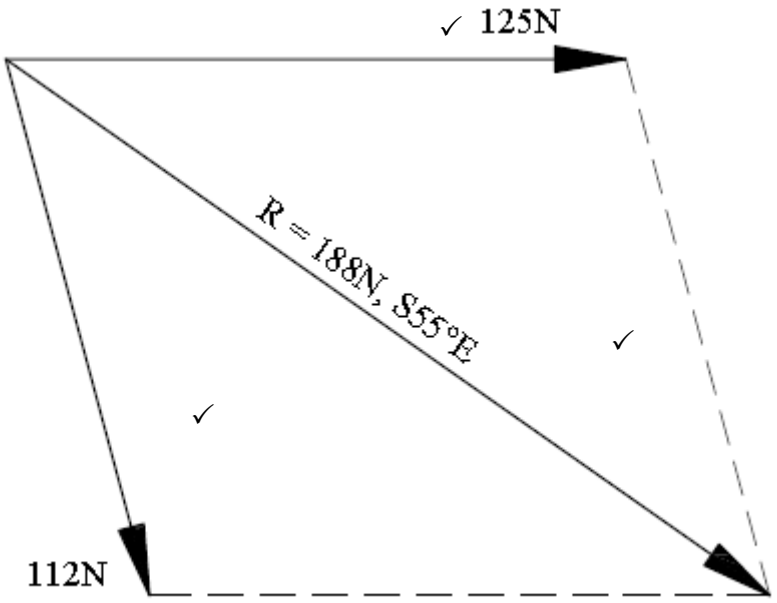

(3)

3.2 3.2.1

$$MA = \frac{load(W)}{effort(f)}$$

$$MA = \frac{(320 \times 9,8)}{210} \checkmark$$

$$\underline{\underline{MA = 14,933}} \checkmark$$

(2)

3.2.2

$$VR = \frac{effort - dist}{load - dist}$$

$$VR = \frac{1,74}{0,345} \checkmark$$

$$\underline{\underline{VR = 5,043}} \checkmark$$

(2)

3.3

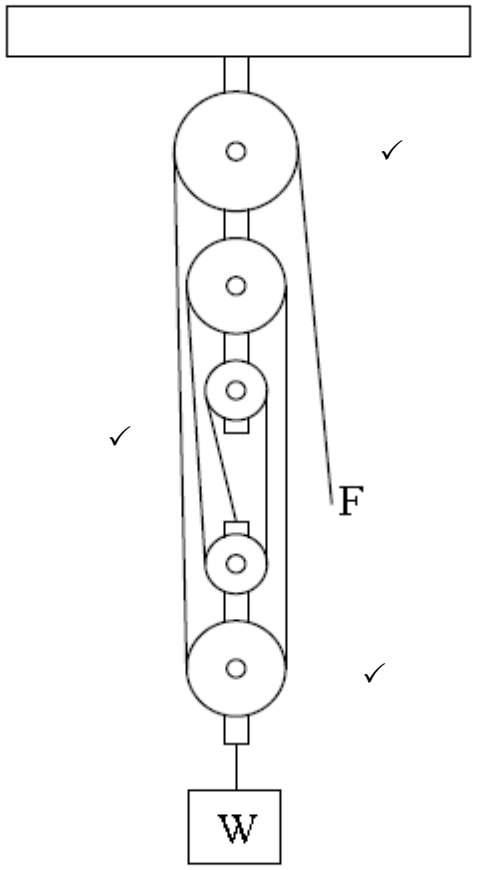

(3)

3.4 $LM = RM$

$F_1.L_1 = F_2.L_2$

$165 \times 55 = P \times 25$

$P = \dfrac{165 \times 55}{25}$ ✓

$\underline{\underline{P = 363N}}$ ✓

(2)

3.5

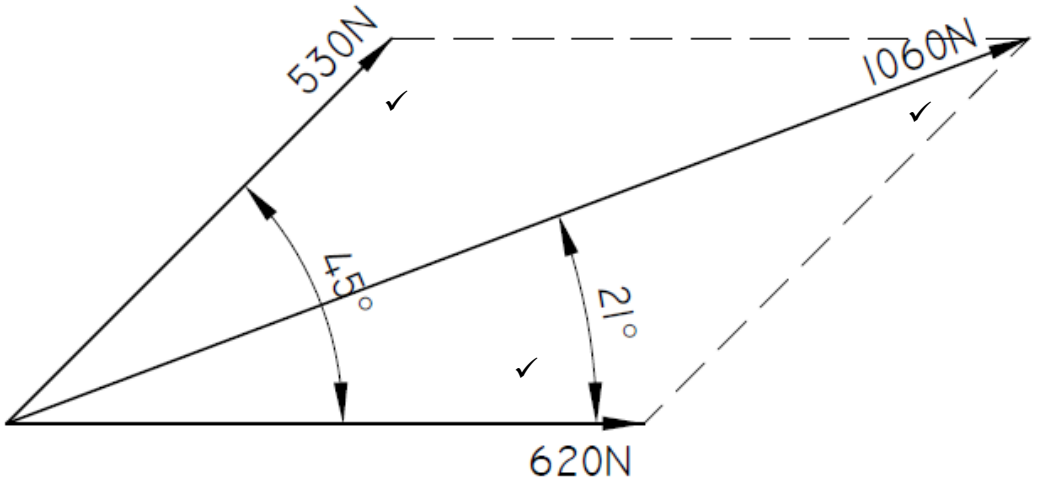

(3)

3.6 When three forces are in equilibrium they can be represented by the sides of a triangle. (1)

[16]

QUESTION 4: ENERGY WORK AND POWER

4.1

4.1.1

$$P = F.v$$

$$F = \frac{P}{v}$$

$$F = \frac{62 \times 10^3}{(110 \div 3{,}6)} \checkmark$$

$$\underline{\underline{F = 2{,}029kN}} \checkmark$$

(2)

4.1.2

$$v = \frac{s}{t}$$

$$s = v.t$$

$$s = (110 \div 3{,}6) \times 18 \checkmark$$

$$\underline{\underline{s = 550m}} \checkmark$$

(2)

4.2 4.2.1

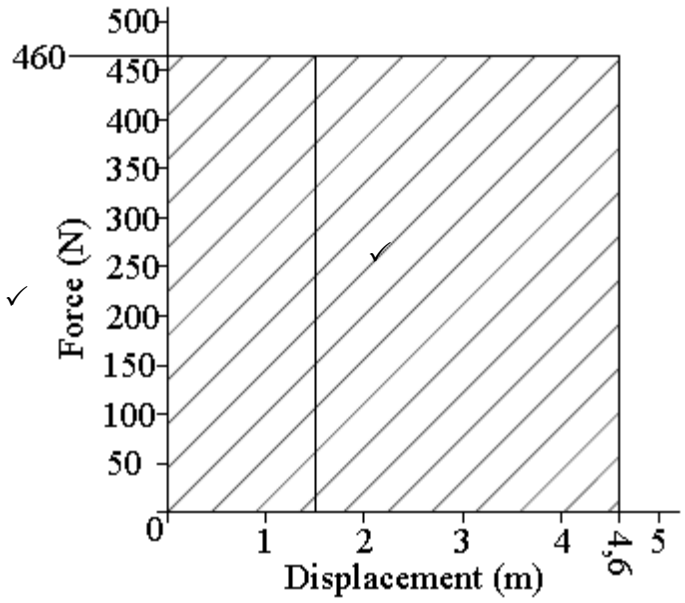

(3)

4.2.2 $W = F.s$

$W = 460,6 \times 4,6$ ✓

$\underline{\underline{W = 2,119kJ}}$ ✓ (2)

4.2.3 $W = F.s$

$W = 460,6 \times 1,5$ ✓

$\underline{\underline{W = 690,9J}}$ ✓ (2)

[11]

QUESTION 5: HEAT

5.1

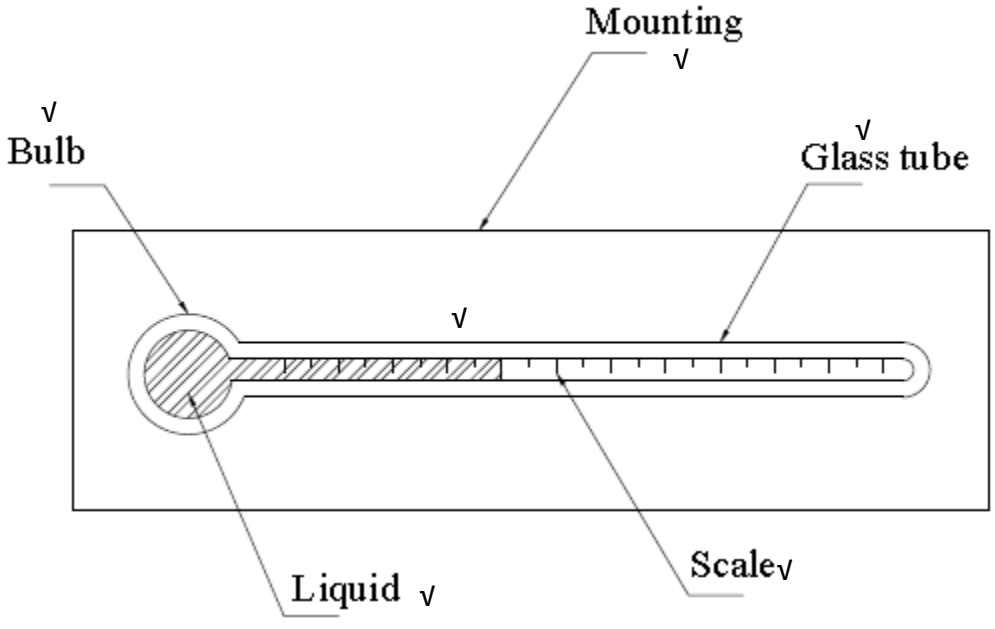

(3)

5.2 5.2.1 $\Delta\ell = l_f - l_o$

$\Delta\ell = 2001{,}695 - 1959$ ✓

$\underline{\underline{\Delta\ell = 42{,}695m}}$ ✓ (1)

5.2.2 $\Delta t = t_f - t_o$

$\Delta t = 185 - 23$ ✓

$\underline{\underline{\Delta t = 162°C}}$ ✓ (1)

5.3
- Heat capacity of a substance is the quantity of heat needed to increase the temperature of the substance.
- Specific heat capacity of a substance is the quantity of heat needed to increase the temperature of 1kg the substance by 1°C. (2)

5.4
- Type of material
- Rise in temperature
- Original length (3)

5.5
- Change in temperature
- Change in dimensions
- Change in phase
- Change in composition
- Change in colour
- Change in resistance
- Electrical effect of heat. (Any 2 × 1) (2)

5.6 5.6.1 $Q = m.c.\Delta t$

$\Delta t = \dfrac{Q}{m.c}$

$\Delta t = \dfrac{75{,}6 \times 10^3}{1{,}85 \times 390}$ √

$\underline{\underline{\Delta t = 104{,}782°C}}$ √ (1)

5.6.2 $\Delta t = t_f - t_o$

$t_f = t_o + \Delta t$

$t_f = 21 + 104{,}782$ √

$\underline{\underline{t_f = 125{,}782°C}}$ √ (1)

[14]

QUESTION 6: PARTICLE STRUCTURE OF MATTER

6.1 Adding or taking away of heat causes a substance to change phase. (1)

6.2

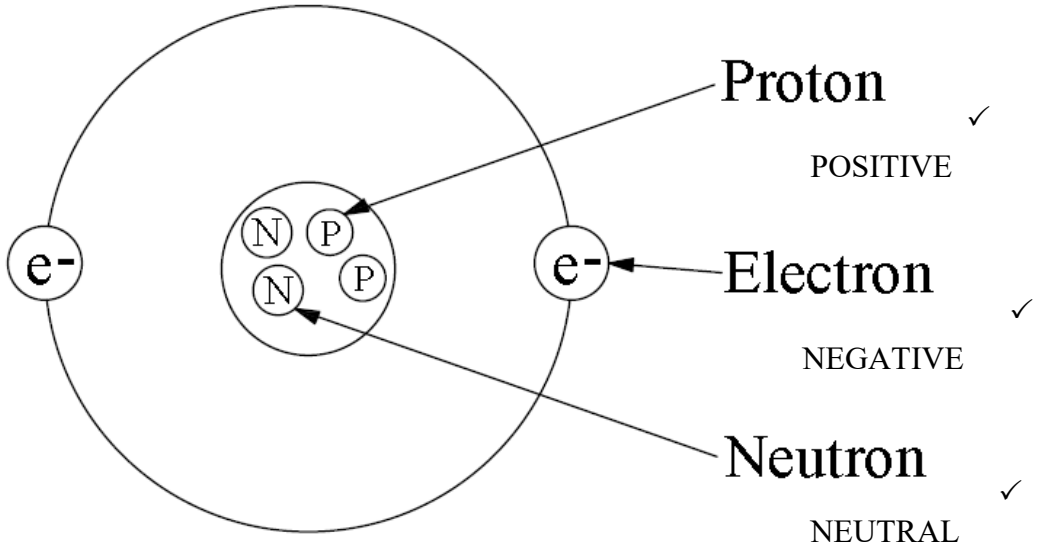

(3)

6.3 6.3.1 Melting
6.3.2 Solidifying
6.3.3 Evaporation

(3 × 1) (3)

6.4 Smallest part of a compound (1)
[8]

QUESTION 7: ELECTRICITY

7.1 The electrical current in a circuit is directly proportional to the potential difference and inversely proportional to the resistance. (1)

7.2 AC – Alternating current√
DC – direct current√ (1)

7.3

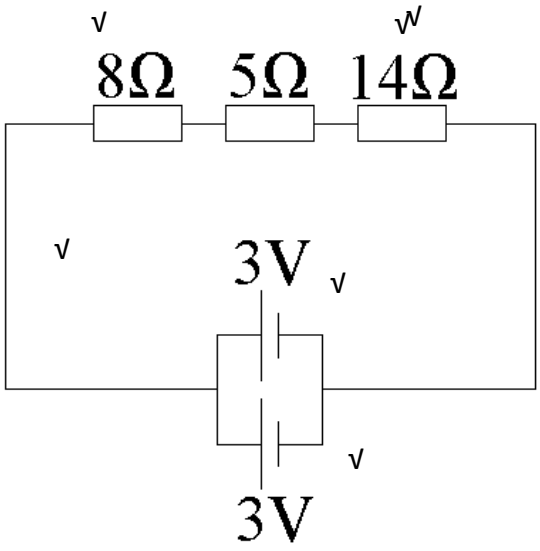

(2)

7.4 7.4.1

$$R_t = R_1 + R_2 + R_3$$
$$R_t = 8 + 5 + 14 \text{ √}$$
$$\underline{\underline{R_t = 27\Omega}} \text{ √}$$

(1)

7.4.2

$$I = \frac{V}{R}$$
$$I = \frac{3}{27} \text{ √}$$
$$\underline{\underline{I = 0{,}111A}} \text{ √}$$

(1)

7.4.3

$$V_{5\Omega} = I.R$$
$$V_{5\Omega} = 0{,}111 \times 5 \text{ √}$$
$$\underline{\underline{V_{5\Omega} = 0{,}555V}} \text{ √}$$

(1)

7.4.4

$$P_{14\Omega} = I^2.R$$
$$P_{14\Omega} = 0{,}111^2.14 \text{ √}$$
$$\underline{\underline{V_{5\Omega} = 0{,}172W}} \text{ √}$$

(1)

7.5
- Type of material
- Length of material
- Cross-sectional area

(2)

7.6 The longer the conductor the higher the resistance (1)

7.7

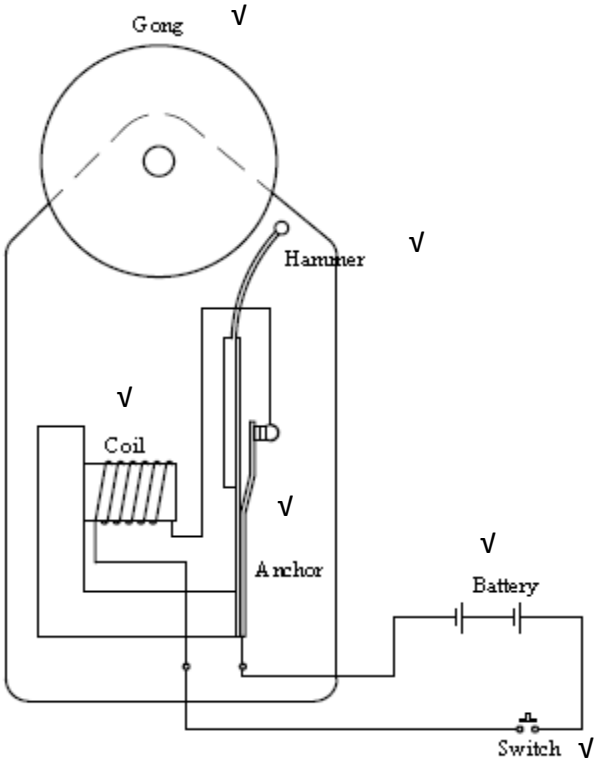

(3)

7.8

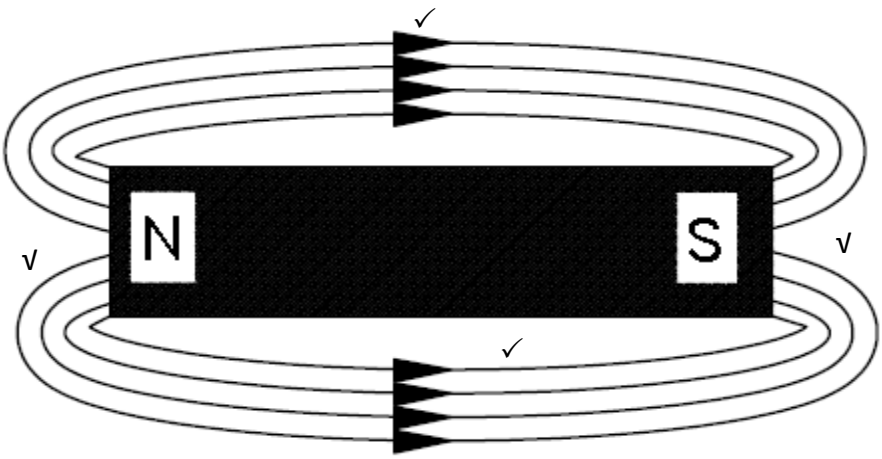

(3)

7.9 7.9.1 Resistance higher
7.9.2 Resistance lower

(2 × 1) (2)

7.10 7.10.1 $R = V.I$

$R = \frac{220}{1,45}$ √

$\underline{\underline{R = 151,724\Omega}}$ √

(R = $\frac{V}{I}$) (2)

7.10.2 $P = V.I$

$P = 220 \times 1,45$

$\underline{\underline{P = 319W}}$ ✓ (1)

[22]

TOTAL SECTION B: 80
GRAND TOTAL: 100

Copyright reserved