20130417T177

higher education & training

Department:
Higher Education and Training
REPUBLIC OF SOUTH AFRICA

T590(E)(A9)T
APRIL EXAMINATION

NATIONAL CERTIFICATE

ENGINEERING SCIENCE N1

(15070391)

9 April 2013 (X-Paper)
09:00–12:00

This question paper consists of 8 pages and a 1-page formula sheet.

Copyright reserved

DEPARTMENT OF HIGHER EDUCATION AND TRAINING
REPUBLIC OF SOUTH AFRICA

NATIONAL CERTIFICATE
ENGINEERING SCIENCE N1
TIME: 3 HOURS
MARKS: 100

INSTRUCTIONS AND INFORMATION

1. Answer ALL the questions.
2. Read ALL the questions carefully.
3. Number the answers according to the numbering system used in this question paper.
4. Write neatly and legibly.

Copyright reserved

QUESTION 1

1.1 What is a vector quantity? (1)

1.2 What is a scalar quantity? (1)

1.3 Add up the following vectors:

1.3.1 A 5 N force west and a 3 N force west (1)

1.3.2 A 6 N force north and a 4 N force south (1)

1.4 Sipho is on his way to school which is 6 km from his house in a westerly direction. After 1,6 km he drops his watch, but only realises it after having walked a further 600 m. He turns around to pick up his watch and then carries on walking to school again. The entire walk lasts 45 minutes.

1.4.1 Calculate the distance Sipho has walked. (2)

1.4.2 Calculate Sipho's average walking speed. (2)

1.5 An aircraft flies from Johannesburg to Cape Town at a constant speed of 750 km/h. Draw a distance-time graph to determine the following: (3)

1.5.1 The time it would take to fly 1 500 km (1)

1.5.2 The distance the aircraft would fly in 1,5 hours (1)

1.6 If an astronaut has a mass of 75 kg on earth, what will his/her weight be on the moon? (The gravitational acceleration on the moon is 1,8 $m.s^2$.) (2)
[15]

QUESTION 2

2.1 When a force is applied on a body it will have certain effects on that body.

Name TWO of those effects. (2)

2.2 Two fishermen pull their boat out of the water. Fisherman A pulls with a force of 450 N and fisherman B with a force of 550 N. The angle between the ropes they are pulling is 45°.

Determine the magnitude and direction of the resultant force of the two men. (3)

Copyright reserved

2.3 A man is lifting an engine block with a mass of 65 kg with a wheel and axle lifting machine. He requires a force of 145 N to lift the engine block.

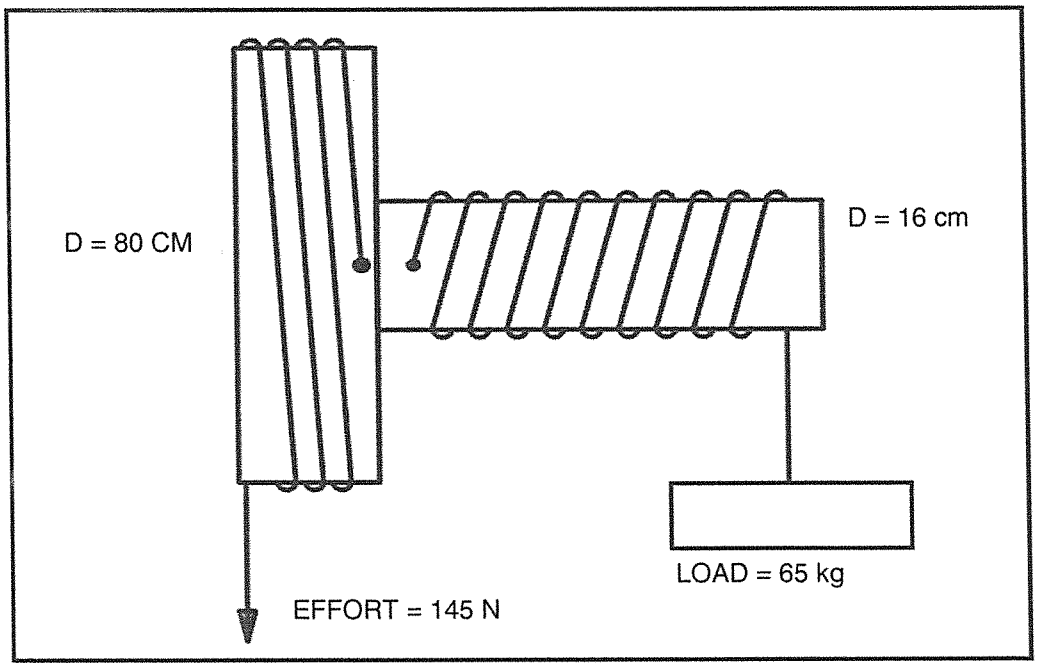

WHEEL AND AXLE MACHINE

2.3.1 Calculate the velocity ratio of the lifting machine. (2)

2.3.2 Calculate the mechanical advantage of the lifting machine. (2)

2.4 A torque is required to tighten the top bolts of a car engine to 100 Nm. The effective length of the spanner used is 400 mm.

Calculate the force needed to tighten the bolts. (2)

Copyright reserved

2.5 Use Bow's notation and diagrams to sketch the triangle of forces of the following diagram (not to scale, but in reasonable proportion):

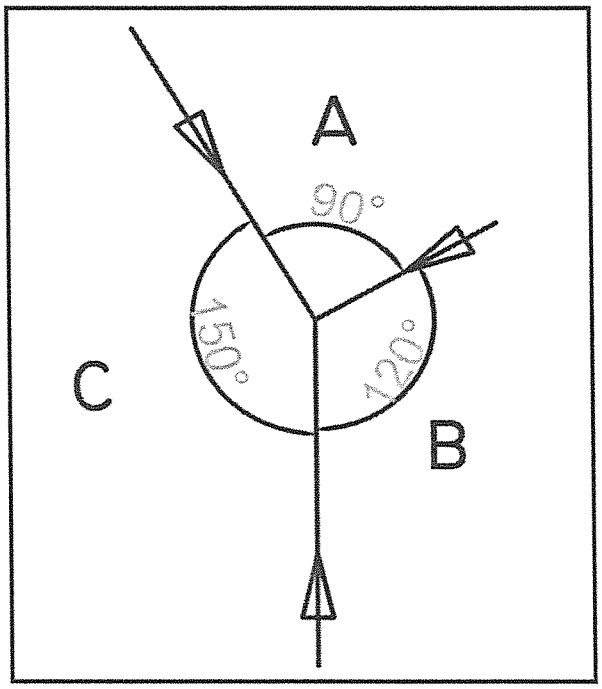

DIAGRAM (3)

2.6 A single-rope pulley system has three pulleys in the upper block and two in the lower block. An effort of 400 N is needed to lift a load of 150 kg.

2.6.1 Draw a neat, labelled sketch of the pulley system. (3)

2.6.2 Calculate the mechanical advantage of the system. (1)
[18]

QUESTION 3

3.1 Name TWO conditions that must be fulfilled before we can say work is done. (2)

3.2 A mine shaft is 200 m deep. A hoist cage weighing 4 000 kg is hoisted up from the bottom to the surface in 5 minutes.

3.2.1 Calculate the work done. (2)

3.2.2 Calculate the power of the hoist motor. (2)

3.3 A pallet of bricks with a mass of 150 kg is raised vertically alongside a building. At the fourth floor the bricks are offloaded. (A floor is 2.1 m high)

3.3.1 Use a scale of 200 N = 1 cm and 1 m = 1 cm and draw a force-distance graph. (3)

3.3.2 Use the graph to determine the work done by raising the bricks to the fourth floor. (2)

Copyright reserved

3.4 What can be defined as the *rate of doing work*? (1)

[12]

QUESTION 4

4.1 Describe the difference between *heat* and *temperature*. (2)

4.2 A certain piece of metal has a mass of 15 kg. After it has received 2,25 MJ of energy, its temperature rises by 330 °C. (2)

Determine the specific heat capacity of this piece of metal.

4.3 If a very hot steel rod is placed in water, heat transfer takes place.

4.3.1 Name the heat transfer process that occurs. (1)

4.3.2 When will the transfer stop? Explain why it stopped. (1)

4.4 A builder's steel measuring tape is 50 m long at a temperature of 48 °C and changes to 49,875 m when the temperature changes to 20 °C.

Calculate the following:

4.4.1 Change in length in mm (1)

4.4.2 Change in temperature in °C (1)

4.5 Choose the correct instrument from the list below to measure each of the following temperatures. Write only the answer next to the question number (4.5.1–4.5.4) in the ANSWER BOOK.

mercury thermometer; alcohol thermometer; thermo coupling; pyrometer

4.5.1 Temperature higher than 1 000 °C (1)

4.5.2 Temperature up to 350 °C (1)

4.5.3 Temperature between 350 °C and 1 000 °C (1)

4.5.4 Temperature between 0 °C and -80 °C (1)

4.6 Give ONE practical example where the linear expansion effect of materials can be used. (1)

4.7 If a substance is heated, it is affected by the process.

Name FOUR effects that heat have on substances. (4)

[17]

Copyright reserved

QUESTION 5

5.1 What is the smallest particle into which an element can be divided without losing its identity? (1)

5.2 Name the THREE parts of an atom and give the charge of each part. (3)

5.3 Movement of particles takes place in the THREE phases of matter.

Compare this movement in each phase. (3)

5.4 Complete the following paragraph by using the word(s) in the list below. Write only the word(s) next to the question number (5.4.1–5.4.3) in the ANSWER BOOK.

liquid; solid; gas; evaporation; condensation; solidifying; melting

When heat is added to a solid, it changes to (5.4.1) ... and the process is called (5.4.2) ... . When a gas (vapour) is cooled down, it changes to a liquid and the process is called (5.4.3) .... (3)

5.5 Indicate whether the following statements are TRUE or FALSE. Choose the answer and write only 'true' or 'false' next to the question number (5.5.1–5.5.2) in the ANSWER BOOK. Correct the statement if it is FALSE.

5.5.1 Matter is made up from extremely small particles called electrons. (1)

5.5.2 When an atom loses or gains a proton it is called an ion. (1)

[12]

QUESTION 6:

6.1 Define the following:

6.1.1 Potential difference (1)

6.1.2 Electrical resistance (1)

6.2 Give ONE reason why an ammeter is connected in series while a voltmeter is connected in parallel. (2)

6.3 Calculate the total resistance of the following combinations:

6.3.1

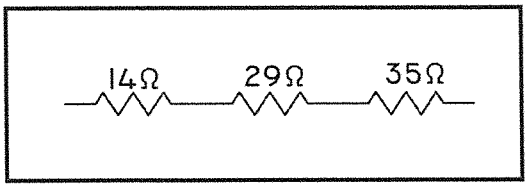

(2)

Copyright reserved

6.3.2

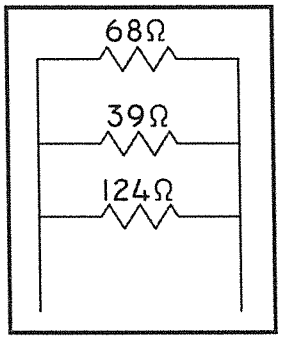

(2)

6.4 Give the symbols for the following:

6.4.1 Battery (1)

6.4.2 Voltmeter (1)

6.4.3 Variable resistor (1)

6.5 A circuit consists of a 12 V battery and an alarm system of 3 ohm resistance.

Calculate the current drawn by the alarm system when it is switched on. (2)

6.6 A heater draws 12 A when connected across a supply voltage of 220 V.

What will the power of the heater be? (2)

6.7 Name TWO factors that determine the resistivity of a conductor. (2)

6.8 Give TWO examples when the heating effect of electrical current is an advantage. (2)

6.9 An electrical globe is marked 220 V; 60 W.

Calculate the following:

6.9.1 The current that flows in the globe (2)

6.9.2 The resistance of the heating element (2)

6.10 If an alloy like brass, nichrome or eureka is heated, what effect does it have on the resistance of the alloy? (1)

6.11 Draw a neat, labelled sketch of the magnetic field around a solenoid (coil). (2)
[26]

TOTAL: 100

Copyright reserved

ENGINEERING SCIENCE N1

FORMULA SHEET

Any applicable formula may also be used.

1. $v = \frac{s}{t}$

2. $F = m.g$

3. $DR = \frac{E_{dist.}}{L_{dist.}}$ $\quad VV = \frac{M_{afst.}}{L_{afst.}}$

4. $MA = \frac{L}{E}$ $\quad HV = \frac{L}{M}$

5. $VR = \frac{D}{d}$ $\quad SV = \frac{D}{d}$

6. $MOMENT = F.s$

7. $T = F.R$

8. $W = F.S$

9. $P = \frac{W}{t}$

10. $P = F.v$

11. $Q = m.c.\Delta t$

12. $L_f = L_o + \Delta L$

13. $L_f = L_o - \Delta L$

14. $P = V.I$

15. $P = I^2.R$

16. $P = \frac{V^2}{R}$

17. $Q = P.t$

18. $I = \frac{V}{R}$

19. $R_t = R_1 + R_2 \ldots$

20. $\frac{1}{R_t} = \frac{1}{R_1} + \frac{1}{R_2} \ldots$

Copyright reserved

higher education & training

Department:
Higher Education and Training
REPUBLIC OF SOUTH AFRICA

MARKING GUIDELINE

NATIONAL CERTIFICATE

APRIL EXAMINATION

ENGINEERING SCIENCE N1

9 APRIL 2013

This marking guideline consists of 10 pages.

Copyright reserved

✔ = 1 mark
√ = ½ mark

QUESTION 1

1.1 A vector is a quantity that has **magnitude**√ and **direction**√. (1)

1.2 A scalar is a quantity that has only **magnitude**✓. (1)

1.3 1.3.1 5 N + 3 N = 8 N west ✓ (1)
1.3.2 6 N - 4 N = 2 N north ✓ (1)

1.4 1.4.1 $6 + 1{,}2 = 7{,}2\ km$ ✓✓ (2)

1.4.2

$$v = \frac{s}{t}$$

$6 + 1.2 = 7.2km$ $= \frac{7{,}2}{0{,}75}$ ✓

$= 9{,}6\ km/h$ ✓$v = \frac{7.2}{0.75}$ (2)

1.5

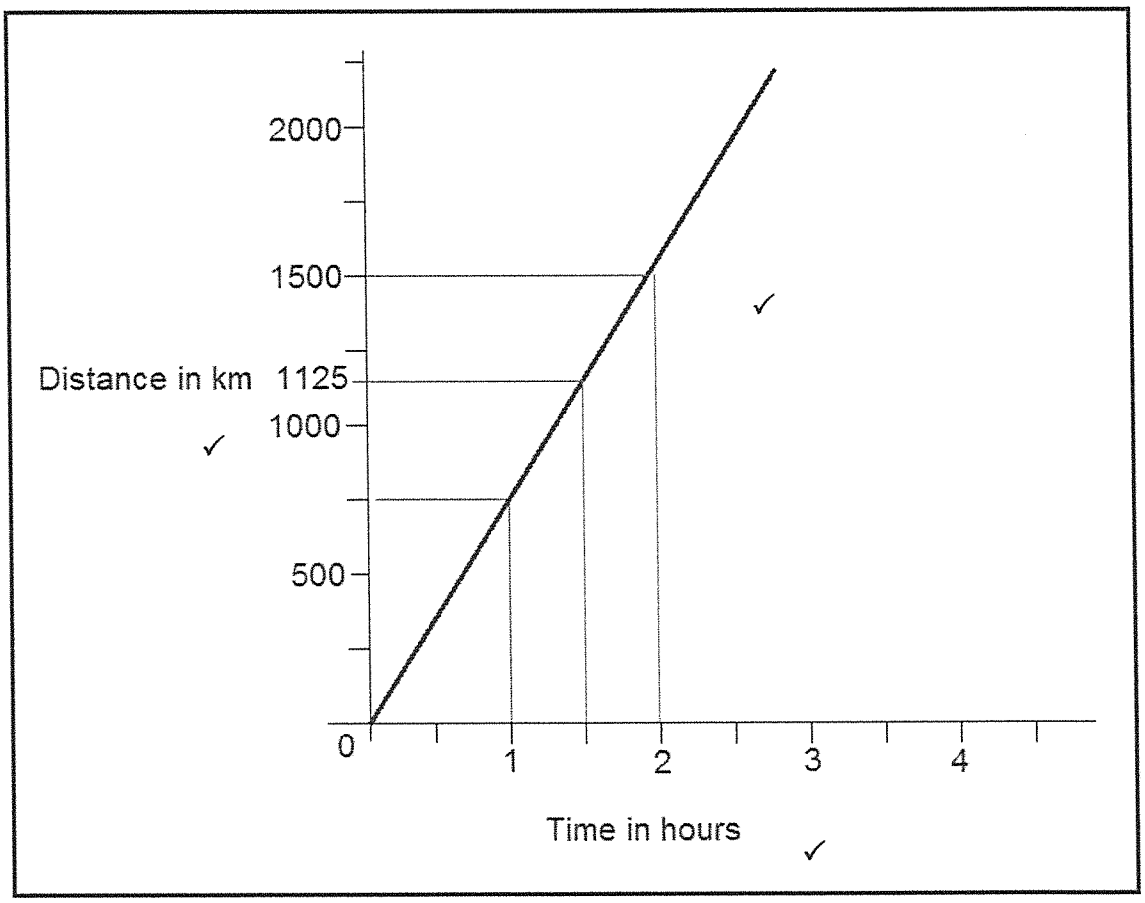

DISTANCE-TIME GRAPH (3)

1.5.1 2 hours ✓ (1)

1.5.2 1 125 km✓ (1)

Copyright reserved

1.6 $F = m \times g$

$F = 75 \times 1{,}8$ ✓

$\underline{F = 135\,\text{N}}$ ✓ (2)

[15]

QUESTION 2

2.1
- Can move or tend to move a body ✓
- Can stop a moving body ✓
- Can change direction of a moving body
- Can change the shape of a body
- Can rotate a body

(Any 2 × 1) (2)

2.2 Because no direction is given, the student can draw it in any direction.

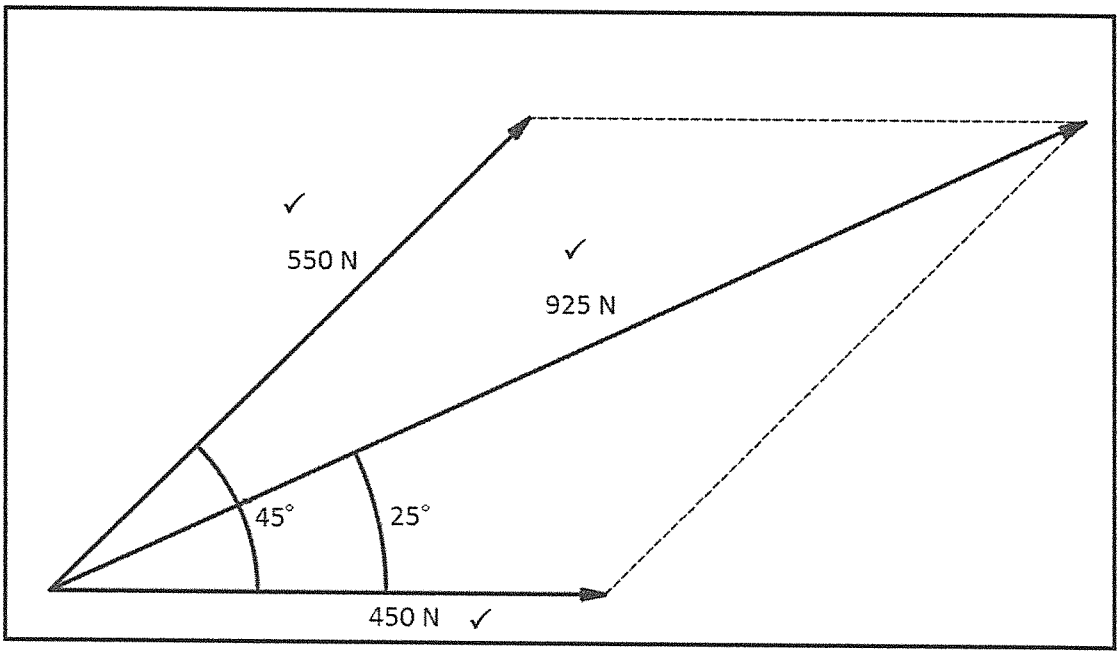

MAGNITUDE AND DIRECTION (3)

2.3 2.3.1

$$VR = \frac{D}{d}$$

$$VR = \frac{80}{16}$$ ✓

$\underline{VR = 5}$ ✓ (2)

Copyright reserved

2.3.2 $$MA = \frac{load}{effort}$$

$$MA = \frac{65 \times 9.8}{145} \quad \checkmark$$

$$MA = 4{,}393 \quad \checkmark$$

(2)

2.4 $$T = F \times r$$

$$F = \frac{T}{r}$$

$$F = \frac{100}{0.4} \quad \checkmark$$

$$F = 250\ N \quad \checkmark$$

(2)

2.5

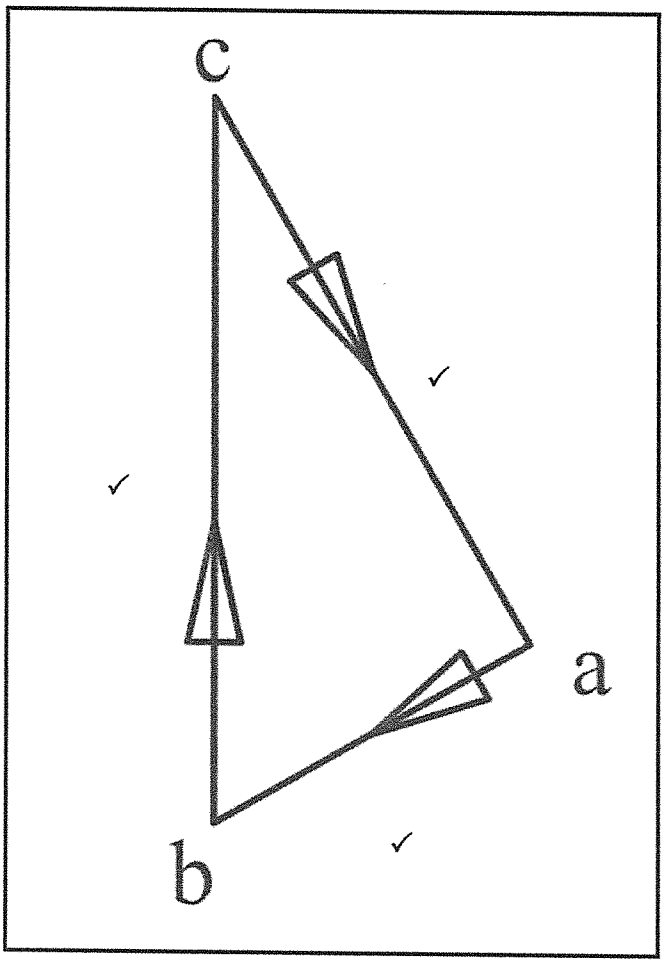

TRIANGLE OF FORCES

(3)

Copyright reserved

2.6 2.6.1

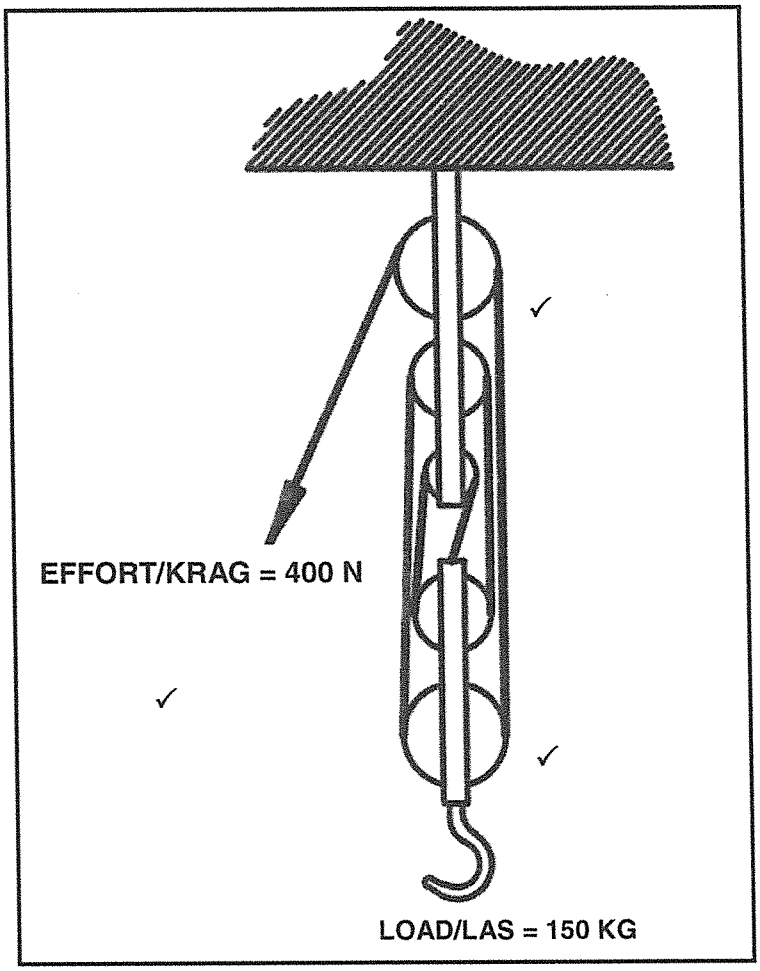

PULLEY SYSTEM (3)

2.6.2

$$MA = \frac{load}{effort}$$

$$MA = \frac{150 \times 9.8}{400} \quad \checkmark$$

$$MA = 3{,}675$$

(1)
[18]

QUESTION 3

3.1 A **force** ✓ must be applied over a **distance** ✓. (2)

3.2 3.2.1

$$W = F \times s$$
$$W = (4\,000 \times 9{,}8) \times 200 \quad \checkmark$$
$$W = 784\,0000\ J$$
$$W = 7{,}84\ MJ \quad \checkmark$$

(2)

$$P = \frac{W}{t}$$
$$P = \frac{784\,000}{(5 \times 60)} \quad \checkmark$$
$$P = 26\,133\ W$$
$$P = 26{,}133\ kW \quad \checkmark$$

(2)

3.3 3.3.1

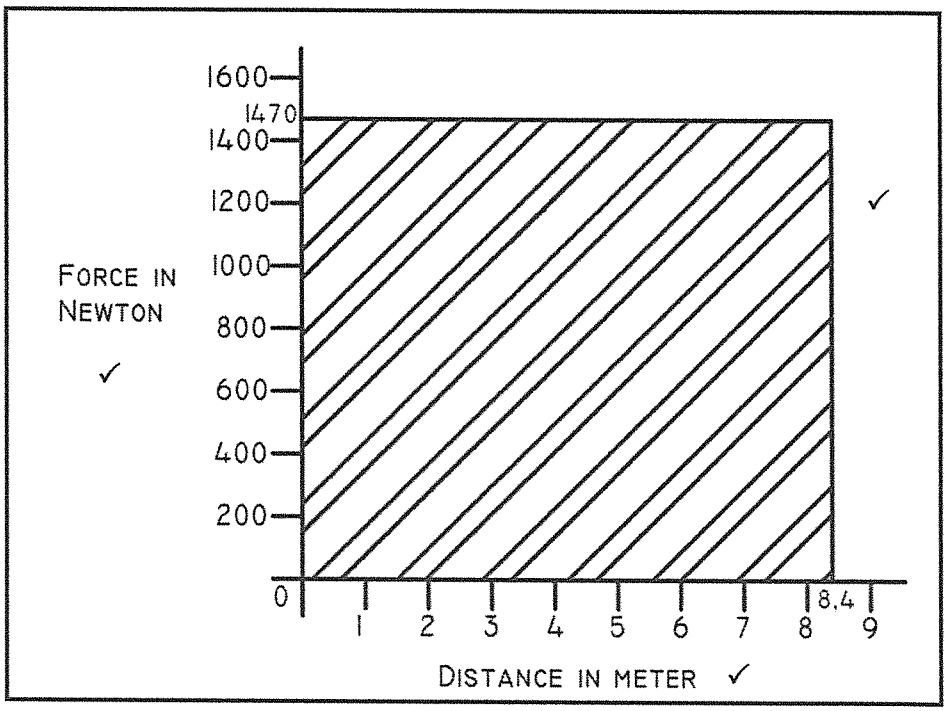

FORCE-DISTANCE GRAPH (3)

3.3.2

$$W = F \times s$$
$$W = 1\,470 \times 8.4 \quad \checkmark$$
$$W = 12\,348\ J$$
$$W = 12{,}348\ kJ \quad \checkmark$$

(2)

3.4 Power input ✓ (1)

[12]

Copyright reserved

QUESTION 4

4.1 Heat is a form of energy measured in Joule. ✓
Temperature is an indication of the degree of hotness or coldness of an object. ✓ (2)

4.2 $Q = m.c.\Delta t$

$$c = \frac{Q}{m.\Delta t}$$

$$c = \frac{2.25 \times 10^6}{15 \times 330}$$ ✓

$c = 454{,}545\ J/kg°C$ ✓ (2)

4.3 4.3.1 Conduction✓ (1)

4.3.2 When the water and the steel rod has the same temperature, transfer of heat is completed. ✓ (1)

4.4 4.4.1 $\Delta l = Lf - Lo$

$\Delta l = 50 - 49{,}875$

$\Delta l = 0{,}125\ mm$ ✓ (1)

4.4.2 $\Delta l = Tf - To$

$\Delta l = 48 - 20$

$\Delta l = 28\ °C$ ✓ (1)

4.5 4.5.1 pyrometer ✓

4.5.2 mercury thermometer ✓

4.5.3 thermo coupling ✓

4.5.4 alcohol thermometer ✓

(4 × 1) (4)

4.6 Bridges, railway lines, bi-metallic strip ✓ (Any applicable answer) (1)

4.7
- Temperature changes✓
- Colour changes✓
- Volume changes✓
- Change of phase✓
- Change in resistance

(Any 4 × 1) (4)
[17]

QUESTION 5

5.1 An atom ✓ (1)

5.2
- Proton – positive ✓
- Electron – negative ✓
- Neutron – neutral ✓ (3)

5.3 Solid – very slow movement. ✓
Liquid – fast movement. ✓
Gas – very fast movement. ✓ (3)

5.4 5.4.1 liquid ✓

5.4.2 melting ✓

5.4.3 condensation ✓ (3)

5.5 5.5.1 False, atoms. ✓ (1)

5.5.2 False, electron ✓ (1)
[12]

QUESTION 6:

6.1 6.1.1 The difference in electrical pressure between two points in a circuit that causes electrical current to flow ✓ (1)

6.1.2 The opposition offered to the flow of electrical current ✓ (1)

6.2 An ammeter has a low resistance that will not influence the circuit. ✓
A voltmeter has a high resistance and will influence the circuit. ✓ (2)

6.3 6.3.1
$$Rt = R_1 + R_2 + R_3$$
$$Rt = 14 + 29 + 35 \quad ✓$$
$$Rt = 78\,\Omega \quad ✓$$ (2)

6.3.2
$$\frac{1}{Rt} = \frac{1}{R_1} + \frac{1}{R_2} + \frac{1}{R_3}$$
$$\frac{1}{Rt} = \frac{1}{68} + \frac{1}{39} + \frac{1}{124} \quad ✓$$
$$Rt = 20{,}656\,\Omega \quad ✓$$ (2)

Copyright reserved

6.4 6.4.1 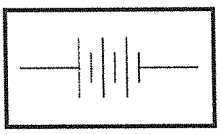 ✓ (1)

6.4.2 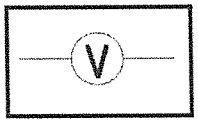

✓ (1)

6.4.3 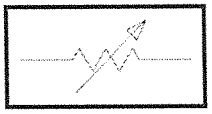 ✓ (1)

6.5 $I = \frac{V}{R}$

$I = \frac{12}{3}$

$I = 4\ A$ (2)

6.6 $P = .V \times I$

$P = 220 \times 12$

$P = 2\,640\ W$

$P = 2.64\ kW$ (2)

6.7
- Type of material ✓
- Length ✓
- Cross-sectional area
- Temperature

(Any 2 × 1) (2)

6.8
- Heater ✓
- Stove ✓
- Geyser
- Kettle

(Any 2 × 1) (2)

Copyright reserved

6.9 6.9.1 $P = V \times I$ (2)

6.9.2 $P = V \times I$

$I = \frac{P}{V}$

$I = \frac{60}{220}$ ✓

$I = 0{,}273\ A$ ✓

$R = \frac{V}{I}$

$R = \frac{220}{0{,}2727272}$

$R = 806{,}667\ \Omega$

OR

$P = \frac{V^2}{R}$

$R = \frac{V^2}{P}$

$R = \frac{220^2}{60}$ ✓

$R = 806.667\ \Omega$ ✓ (2)

6.10 The resistance will stay the same.✓ (1)

6.11

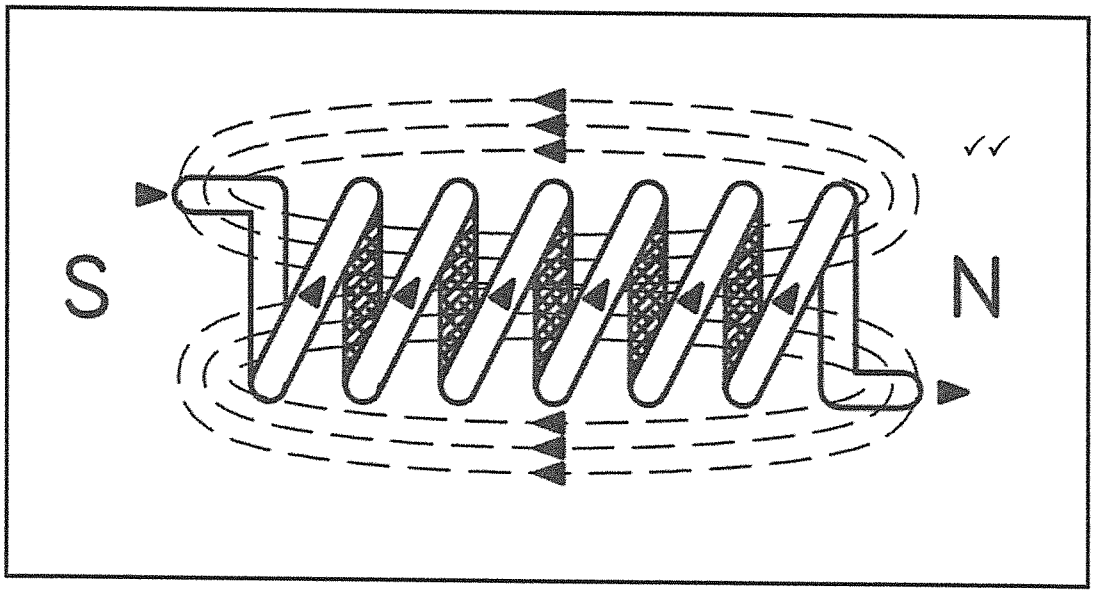

SOLENOID MAGNETIC FIELD (2)

[26]

TOTAL: 100

Copyright reserved