higher education & training

Department:
Higher Education and Training
REPUBLIC OF SOUTH AFRICA

T570(E)(A2)T
APRIL EXAMINATION

NATIONAL CERTIFICATE

ENGINEERING SCIENCE N1

(15070391)

2 April 2015 (Y-Paper)
13:00–16:00

This question paper consists of 8 pages and a formula sheet.

ENGINEERING

Copyright reserved

DEPARTMENT OF HIGHER EDUCATION AND TRAINING
REPUBLIC OF SOUTH AFRICA

NATIONAL CERTIFICATE
ENGINEERING SCIENCE N1
TIME: 3 HOURS
MARKS: 100

INSTRUCTIONS AND INFORMATION

1. Answer ALL the questions.
2. Read ALL the questions carefully.
3. Number the answers according to the numbering system used in this question paper.
4. Write neatly and legibly.

ENGINEERING

Copyright reserved

QUESTION 1

1.1 Define the following:

1.1.1 A vector

1.1.2 Velocity

1.1.3 Weight

1.1.4 Distance

(4 × 1) (4)

1.2 An aeroplane flies at 720 km/h in an easterly direction. A passenger walks to the back of the plane at 3 m/s.

Calculate:

1.2.1 The velocity of the aeroplane in m/s (1)

1.2.2 The resultant velocity of the passenger in m/s (2)

1.2.3 The distance the aeroplane has flown in 45 min (2)

1.3 A 125 cc motorbike accelerates from rest to 90 km/h within 160 m in 12 seconds.

1.3.1 Draw a velocity/time graph of the movement. (Hint: Change km/h to m/s) (3)

Answer the following question by referring to the graph:

1.3.2 Calculate the acceleration of the motorbike. (2)

1.3.3 Determine the velocity of the motorbike in m/s after 5 seconds. (1)

1.3.4 Determine the time it would take to reach a velocity of 12 m/s. (1)

[16]

ENGINEERING

Copyright reserved

QUESTION 2

2.1 Define the following:

2.1.1 A triangle of forces

2.1.2 Mechanical advantage

2.1.3 The law of moments

2.1.4 Force

(4 × 1) (4)

2.2 Determine, with the aid of the parallelogram method, the magnitude and direction of the resultant of the forces in FIGURE 1.

Use scale 1 cm = 10 N

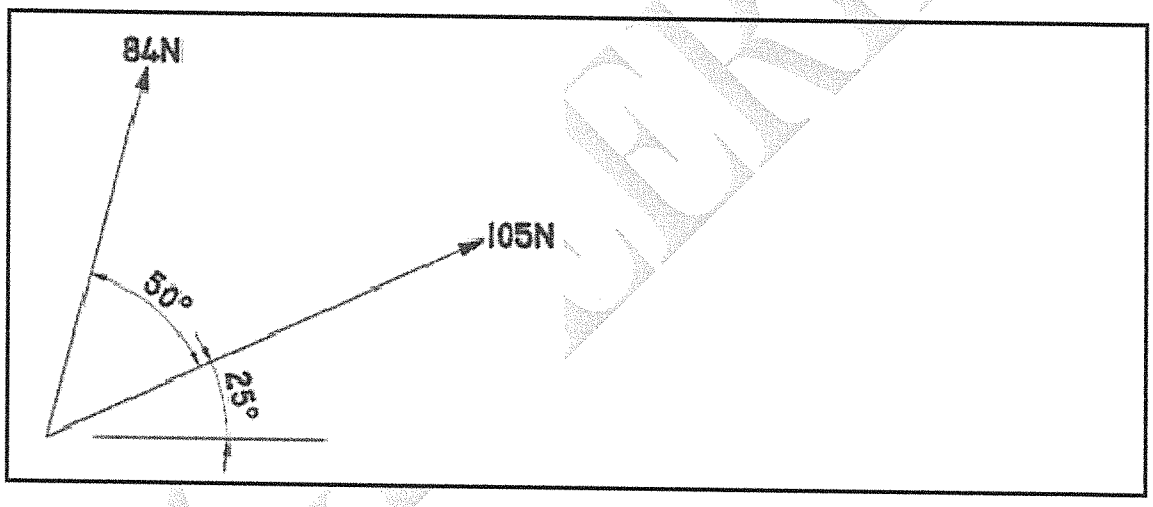

FIGURE 1

(5)

2.3 Calculate the unknown force F in the simple beam shown in FIGURE 2.

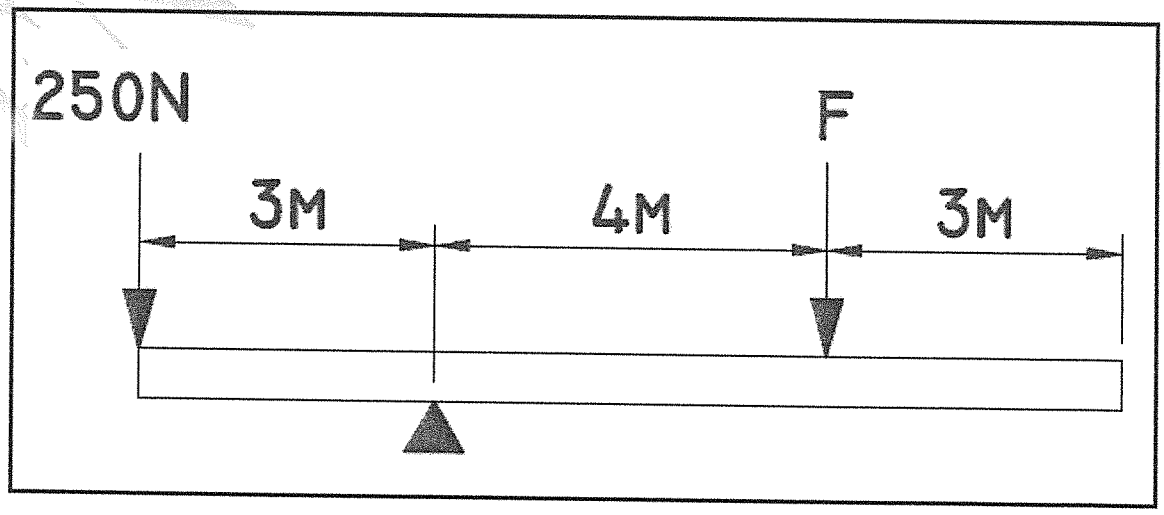

FIGURE 2

(3)

Copyright reserved

2.4 In a wheel and axle lifting machine an effort of 135 N is needed to lift a load of 510 N. The diameter of the wheel is 190 mm and the diameter of the axle is 60 mm.

Calculate:

2.4.1 The displacement ratio (VR) (2)

2.4.2 The mechanical advantage (MA) (1)

2.5 Determine the torque exerted on a nut if the spanner used has an effective length of 250 mm and a force of 30 N is applied. (2)

2.6 Name TWO effects that a force can have on a body. (2)
[19]

QUESTION 3

3.1 Give a description of the following types of energy:

3.1.1 Potential energy

3.1.2 Kinetic energy

3.1.3 Chemical energy

(3 × 1) (3)

3.2 How far can a sledge be pulled with 8,2 kJ energy if a pulling force of 110 N is needed? (2)

3.3 A mass of 60 kg is being lifted 11 m by a constant force.

3.3.1 Draw a force/distance graph.

Use a scale of 1 cm = 50 N and 1 cm = 1 m. (3)

Determine from the graph:

3.3.2 The work done (1)

3.3.3 The power if it takes 10 s to lift the load to a distance of 11 m (1)
[10]

ENGINEERING

Copyright reserved

QUESTION 4

4.1 Describe the difference between *temperature* and *heat*. (2)

4.2 Name the THREE factors that will influence linear expansion of substances. (3)

4.3 A steam pipe has a length of 325 m at a temperature of 25 °C. Steam at 146 °C flows through the pipe causing the pipe to expand and to lengthen to 325,587 m.

Calculate:

4.3.1 Increase in length (Δl)

4.3.2 Change in temperature (Δt)

(2 × 1) (2)

4.4 A cast iron pulley with a mass of 5 kg releases 450 kJ of heat energy when the temperature decreases with 180 °C.

Calculate the specific heat capacity of the cast iron. (2)

4.5 Define *specific heat capacity*. (1)

4.6 Determine the heat energy needed to heat up a piece of metal, with a specific heat capacity of 377 J/kg °C, from 100 °C to 180 °C. The mass of the metal is 15 kg. (2)

4.7 Draw a neat, labelled sketch of a mercury thermometer. (2)

4.8 State THREE advantages of a mercury thermometer. (3)

[17]

QUESTION 5

5.1 Name the THREE phases of matter and give an example of each. (3)

5.2 Write down the charge of each of the following parts:

5.2.1 Proton

5.2.2 Electron

5.2.3 Neutron

(3 × 1) (3)

5.3 Draw a neat, labelled sketch of an atom. (4)

5.4 What causes a substance to change phase? (2)

[12]

Copyright reserved

ENGINEERING

QUESTION 6

6.1 Indicate whether the following statements are TRUE or FALSE. Choose the answer and write only 'true' or 'false' next to the question number (6.1.1–6.1.8) in the ANSWER BOOK.

6.1.1 An alloy's resistance stays the same if the temperature rises.

6.1.2 A generator is a source of direct current.

6.1.3 An insulator allows electrical current to flow.

6.1.4 The direction of current changes constantly in an alternating current.

6.1.5 Resistance is opposition against the flow of current.

6.1.6 An ammeter is always connected in parallel in a circuit.

6.1.7 Ohm's law: The current in a closed circuit is directly proportional to the voltage and inversely proportional to the resistance.

6.1.8 The resistance in a series circuit will be higher than the resistance in a parallel circuit.

(8 × 1) (8)

6.2 State whether each of the following substances is a conductor or an insulator:

6.2.1 Silver

6.2.2 PVC

6.2.3 Wood

6.2.4 Copper

(4 × 1) (4)

6.3 Draw the symbols of the following electrical components:

6.3.1 Voltmeter

6.3.2 Resistor

6.3.3 A cell

6.3.4 Globe

(4 × 1) (4)

ENGINEERING

Copyright reserved

6.4 Three resistances of 6 Ω, 13 Ω and 17 Ω respectively are connected in parallel over a 12 V battery.

6.4.1 Draw a neat circuit diagram of the resistors and battery.

Calculate:

6.4.2 Total resistance in the combination

6.4.3 The current flow in the circuit

(3 × 2) (6)

6.5 Name FOUR factors that influence the resistance of a conductor. (4)
[26]

TOTAL: 100

ENGINEERING

Copyright reserved

ENGINEERING SCIENCE N1

FORMULA SHEET

Any applicable formula can be used.

1. $v = \frac{s}{t}$
2. $F = m.g$
3. $VV = \frac{M_{afst}}{L_{afst}}$ $DR = \frac{E_{dist}}{L_{dist}}$
4. $HV = \frac{L}{M}$ $MA = \frac{L}{E}$
5. $SV = \frac{D}{d}$ $VR = \frac{D}{d}$
6. $Moment = F.s$
7. $T = F.r$
8. $W = F.s$
9. $P = \frac{W}{t}$
10. $P = F.v$
11. $Q = m.c.\Delta t$
12. $L_f = L_o + \Delta L$
13. $L_f = L_o - \Delta L$
14. $P = V.I$
15. $P = \frac{V^2}{R}$
16. $P = I^2.R$
17. $Q = P.t$
18. $I = \frac{V}{R}$
19. $R_t = R_1 + R_2 + \ldots$
20. $\frac{1}{R_t} = \frac{1}{R_1} + \frac{1}{R_2} + \ldots$

ENGINEERING

Copyright reserved

higher education & training

Department:
Higher Education and Training
REPUBLIC OF SOUTH AFRICA

MARKING GUIDELINE

NATIONAL CERTIFICATE

APRIL EXAMINATION

ENGINEERING SCIENCE N1

2 APRIL 2015

This marking guideline consists of 11 pages.

Copyright reserved

✓= 1 mark
√ = ½ mark

QUESTION 1

1.1 1.1.1 A vector is a physical quantity that has a magnitude and a specific direction.✓

1.1.2 Velocity is the rate of change in displacement.✓

1.1.3 The gravitational force acting on a body.✓

1.1.4 Actual route a body moves irrespective of the direction.✓

(4 × 1) (4)

1.2 1.2.1

$$v = 720/3{,}6$$

$$\underline{v = 200\ m.s^{-1}} \quad ✓$$

(1)

1.2.2

$$v = 200 - 3$$

$$\underline{v = 197\ m.s^{-1}East} \quad ✓ \ ✓$$

(2)

1.2.3

$$v = \frac{s}{t}$$

$$s = v.t$$

$$s = 200 \times 2\,700 \quad ✓$$

$$s = 540\,000\ m$$

$$\underline{s = 540\ km} \quad ✓$$

(2)

Copyright reserved

1.3 1.3.1

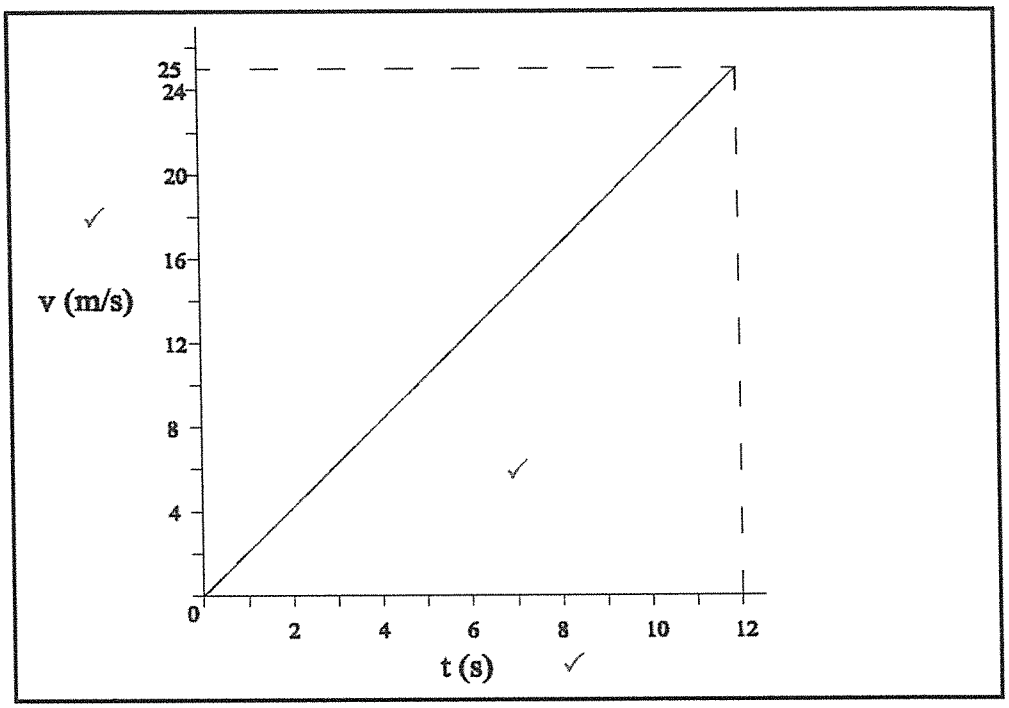

(3)

1.3.2

$$a = \frac{v}{t}$$

$$a = \frac{25}{12} \quad \checkmark$$

$$\underline{a = 2{,}083\ m.s^{-2}} \quad \checkmark$$

(2)

1.3.3

$$a = \frac{v}{t}$$

$$v = a.t$$

$$v = 2.083 \times 5$$

$$\underline{v = 10{,}415\ m.s^{-1}} \quad \checkmark$$

(1)

1.3.4

$$a = \frac{v}{t}$$

$$t = \frac{v}{a}$$

$$t = \frac{12}{2{,}083}$$

$$\underline{v = 5{,}761\ s} \quad \checkmark$$

(1)
[16]

Copyright reserved

QUESTION 2

2.1 2.1.1 If three forces acting on the same point are in equilibrium, they can be represented in magnitude and direction by the sides of a triangle. ✓

2.1.2 Mechanical advantage is the ratio the load has to overcome to the corresponding effort applied. ✓

2.1.3 A system of forces is in equilibrium when the sum of the clockwise moments about a point, is equal to the anticlockwise moments about the same point. ✓

2.1.4 A force is that influence which, applied to a body, will change or tend to change the state of rest or uniform motion in a straight line. ✓

(4 × 1) (4)

2.2

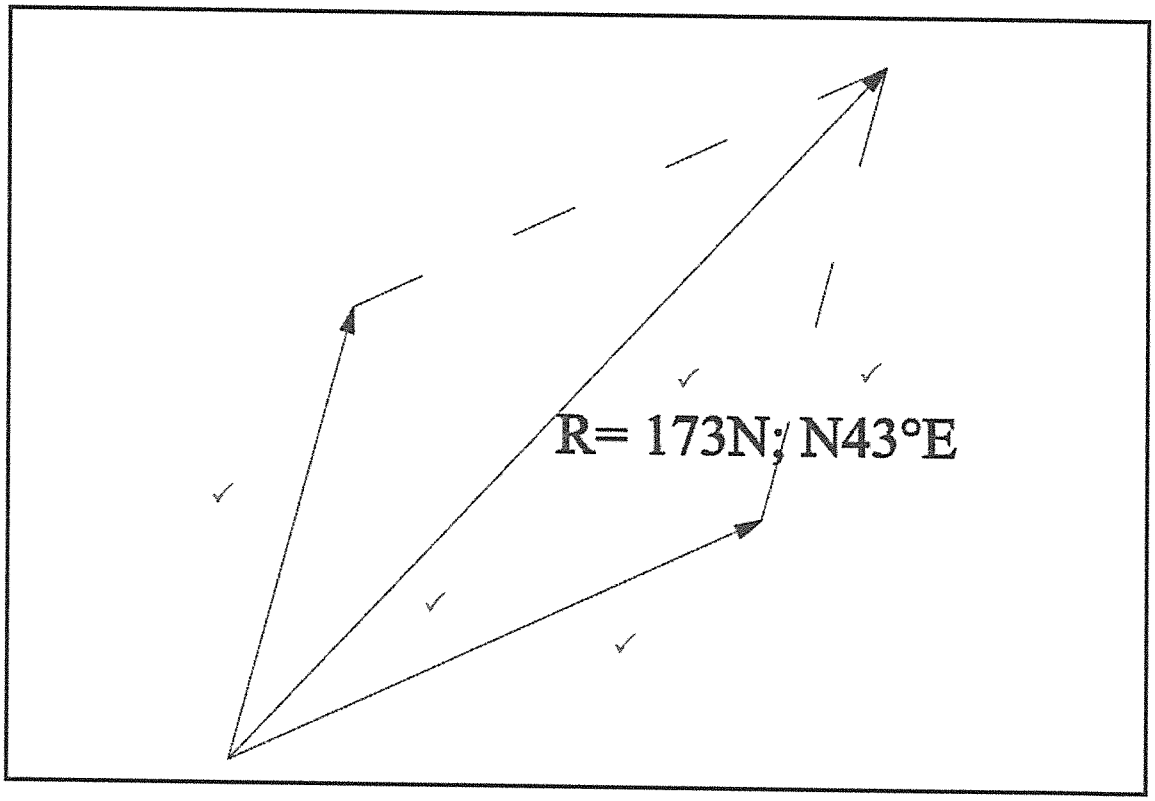

(5)

2.3 $CWM = ACM$

$250 \times 3 = F \times 4$ ✓

$F = \frac{750}{4}$ ✓

$F = 187{,}5\ N$ ✓

(3)

2.4 2.4.1

$$VR = \frac{s_E}{s_L}$$

$$VR = \frac{D}{d} \quad \checkmark$$

$$VR = \frac{190}{60}$$

$$VR = 3{,}167 \quad \checkmark \qquad (2)$$

2.4.2

$$MA = \frac{load}{effort}$$

$$MA = \frac{510}{135}$$

$$MA = 3{,}778 \quad \checkmark \qquad (1)$$

2.5

$$T = F \times r$$

$$T = 30 \times 0{,}25 \quad \checkmark$$

$$\underline{T = 7{,}5\ Nm} \quad \checkmark \qquad (2)$$

2.6

- An object in a state of rest begins to move. ✓
- A moving object comes to standstill. ✓
- The direction of a moving object changes.
- The shape of an object is changed.

(2)
[19]

QUESTION 3

3.1 3.1.1 Potential energy is the energy a body possesses due to its position or state of strain. ✓

3.1.2 Kinetic energy is energy a body possesses due to its motion. ✓

3.1.3 Chemical energy is the energy a body possesses due to a chemical reaction. ✓

(3 × 1) (3)

3.2

$$E = F.s$$

$$s = \frac{E}{F} \quad \checkmark$$

$$s = \frac{8200}{110}$$

$$\underline{s = 74{,}545\ m} \quad \checkmark \qquad (2)$$

Copyright reserved

3.3 3.3.1

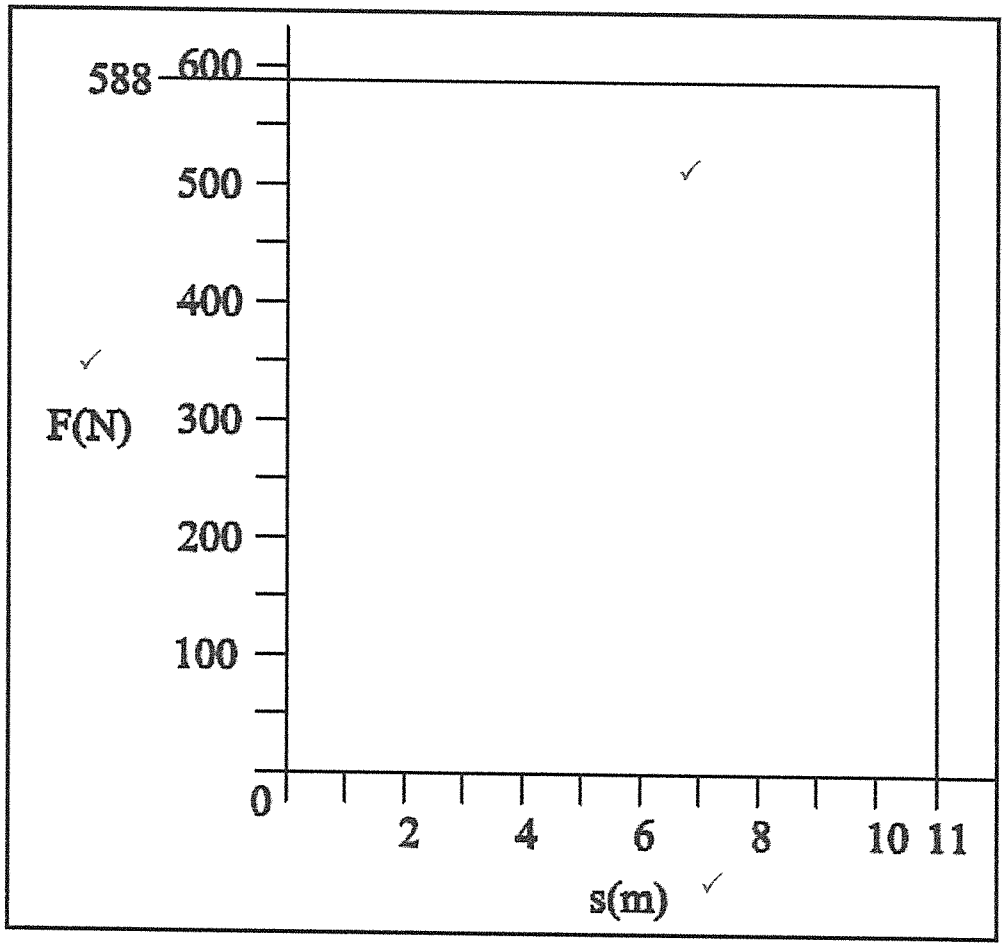

(3)

3.3.2 $Area = L \times B$

$W = F \times s$

$W = 588 \times 11$

$\underline{W = 6\,468\ J}$ ✓

(1)

3.3.3 $P = \frac{W}{t}$

$P = \frac{6468}{10}$

$\underline{P = 646{,}8\ W}$ ✓

(1)
[10]

QUESTION 4

4.1
- Temperature is the hotness or coldness of a body. ✓
- Heat is a form of energy. ✓

(2)

4.2
- Type of material ✓
- Temperature difference ✓
- Length of material ✓

(3)

4.3 4.3.1

$$\Delta l = L_f - L_o$$
$$\Delta l = 325{,}587 - 325$$
$$\underline{\Delta l = 0{,}587\ m} \checkmark$$

4.3.2

$$\Delta t = t_f - t_o$$
$$\Delta t = 146 - 25$$
$$\underline{\Delta t = 121\ °C} \checkmark$$

(2 × 1) (2)

4.4

$$Q = m.c.\Delta t$$
$$c = \frac{Q}{m.\Delta t}$$
$$c = \frac{450000}{5 \times 180} \checkmark$$
$$\underline{c = 500\ J/kg\ °C} \checkmark$$

(2)

4.5 Specific heat capacity is the amount of heat energy required to raise the temperature of 1 kg of a substance with 1 °C. ✓ (1)

4.6

$$Q = m.c.\Delta t$$
$$Q = 15 \times 377 \times 80$$
$$Q = 452\ 400\ J \checkmark$$
$$\underline{Q = 425{,}4\ kJ} \checkmark$$

(2)

Copyright reserved

4.7

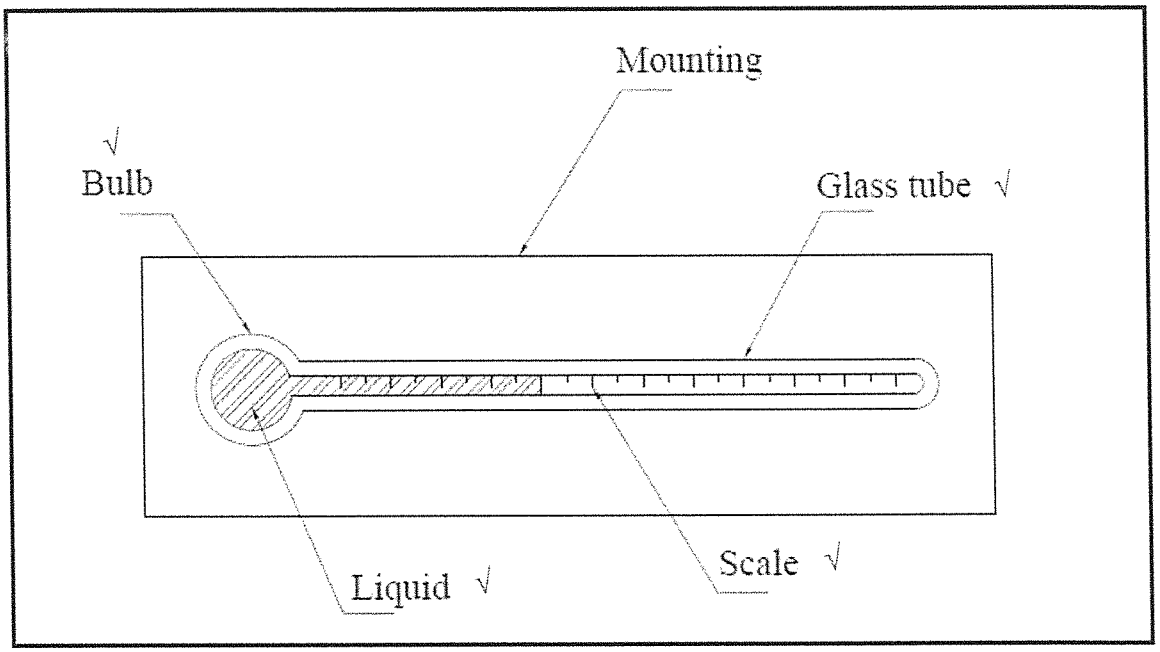

(2)

4.8

- High boiling point ✓
- Easily visible ✓
- Does not stick to the glass ✓
- Uniform expansion

(3)
[17]

QUESTION 5

5.1
- Solid – any applicable answer ✓
- Liquid – any applicable answer ✓
- Gas – any applicable answer ✓

(3)

5.2 5.2.1 Positive (+) ✓

5.2.2 Negative (-) ✓

5.2.3 Neutral ✓

(3 × 1) (3)

5.3

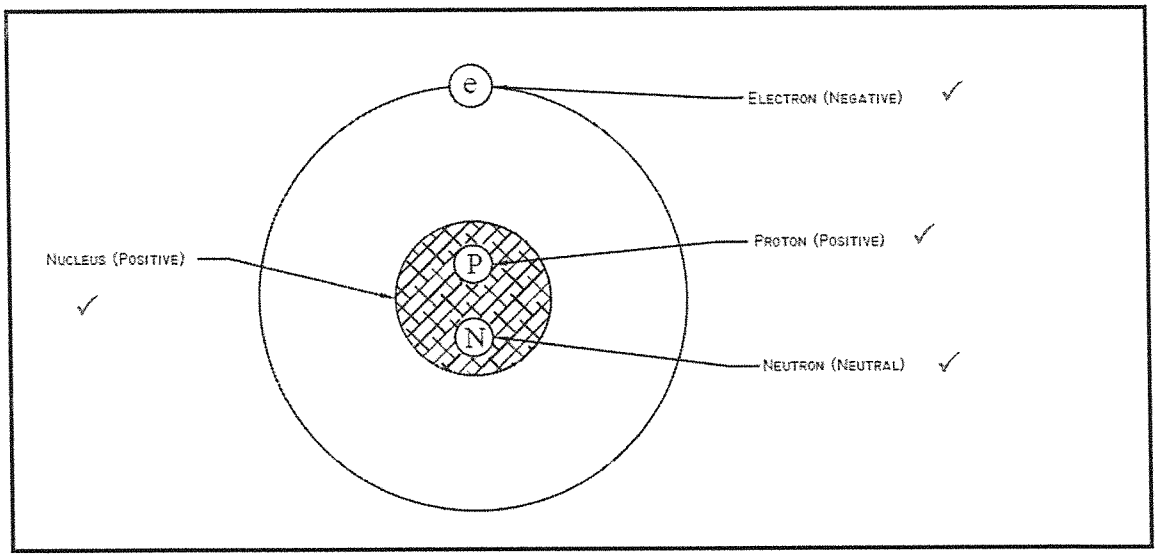

(4)

5.4 Heat is added✓ or taken away. ✓ (2)

[12]

QUESTION 6

6.1
6.1.1 True
6.1.2 True
6.1.3 False
6.1.4 True
6.1.5 True
6.1.6 False
6.1.7 True
6.1.8 True

(8 × 1) (8)

6.2
6.2.1 Conductor ✓
6.2.2 Insulator ✓
6.2.3 Insulator ✓
6.2.4 Conductor ✓

(4 × 1) (4)

Copyright reserved

6.3 6.3.1



✓

6.3.2

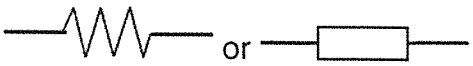

✓

6.3.3

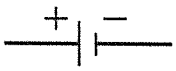

✓

6.3.4

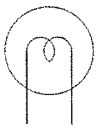

✓

(4 × 1) (4)

6.4 6.4.1

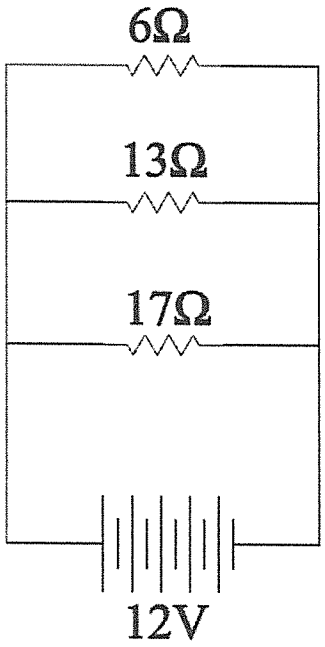

✓ ✓

(2)

6.4.2

$$\frac{1}{R_T} = \frac{1}{R_1} + \frac{1}{R_2} + \frac{1}{R_3}$$

$$\frac{1}{R_T} = \frac{1}{6} + \frac{1}{13} + \frac{1}{17} \quad ✓$$

$$\underline{R_T = 3{,}307\ \Omega} \quad ✓$$

(2)

6.4.3

$$I = \frac{V}{R_T}$$

$$I = \frac{12}{3{,}307} \quad ✓$$

$$\underline{I = 3{,}629\ A} \quad ✓$$

(2)

6.5
- Temperature
- Length of conductor
- Cross sectional area
- Type of material

(4)
[26]

TOTAL: 100

Copyright reserved