higher education & training

Department:
Higher Education and Training
REPUBLIC OF SOUTH AFRICA

T550(E)(N18)T
NOVEMBER EXAMINATION

NATIONAL CERTIFICATE

ENGINEERING SCIENCE N1

(15070391)

18 November 2014 (Y-Paper)
13:00–16:00

This question paper consists of 7 pages and 1 formula sheet.

ENGINEERING

Copyright reserved

DEPARTMENT OF HIGHER EDUCATION AND TRAINING
REPUBLIC OF SOUTH AFRICA

NATIONAL CERTIFICATE
ENGINEERING SCIENCE N1
TIME: 3 HOURS
MARKS: 100

INSTRUCTIONS AND INFORMATION

1. Answer ALL the questions.
2. Read ALL the questions carefully.
3. Number the answers according to the numbering system used in this question paper.
4. Write neatly and legibly.

ENGINEERING

Copyright reserved

QUESTION 1

1.1 Indicate whether the following statements are TRUE or FALSE. Choose the answer and write only 'true' or 'false' next to the question number (1.1.1–1.1.4) in the ANSWER BOOK.

1.1.1 Distance is the route length covered, regardless of direction.

1.1.2 Displacement is straight line path between any two points.

1.1.3 Acceleration can be positive and negative.

1.1.4 Mass is the amount of matter a body contains.

(4 x ½) (2)

1.2 TWO forces act on the same body. The first one pulls up with a force of 125 N and the second one pushes down with 105 N.

Find the resultant. (1)

1.3 Can distance covered and displacement be the same? Give a reason for your answer. (2)

1.4 A man sees a puff of smoke from a cannon some distance away and 3,5 seconds later he hears a boom.

If the velocity of sound is 355 m/s, how far is the cannon from the man? (2)

1.5 A man travels 60 km East and turns 10km North, then again 20 km West and another 4 km South.

1.5.1 Draw a sketch that represents the trip on a scale of 5 km = 1 cm. (2)

1.5.2 Calculate the total distance the man has travelled. (1)

1.5.3 Calculate the man's displacement. (1)

1.5.4 Determine the average speed at which the man travelled, if the whole trip took 90 minutes. (2)

1.5.5 What is the average velocity of the trip? (2)

[15]

ENGINEERING

QUESTION 2

2.1 What is a *system* of force? (1)

2.2 Explain what is meant by *the equilibrant of a system of force.* (1)

2.3 Using the diagram below, determine the magnitude of force **P**.

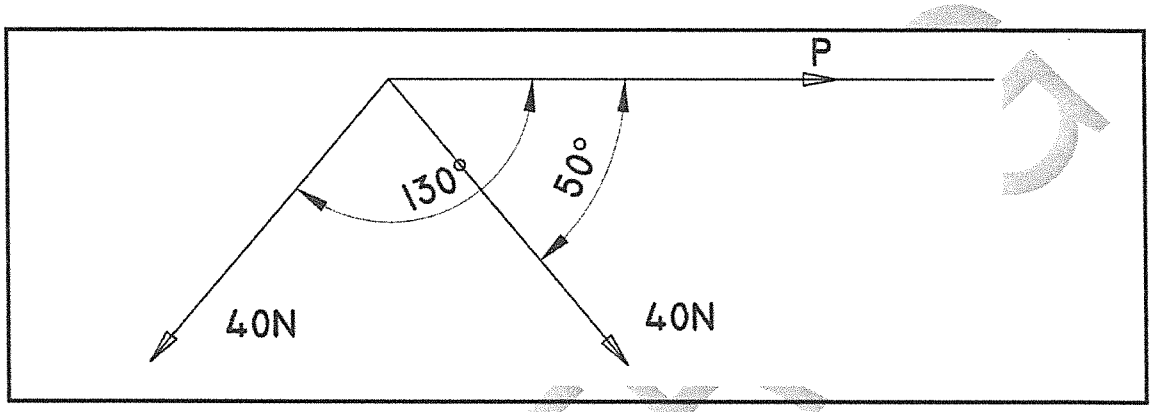

(2)

2.4 A pulley system comprising TWO blocks with TWO pulleys each, has a mechanical advantage of 3,2 when raising a load of 1,3kN.

Calculate for the following conditions:

2.4.1 The velocity ratio (1)

2.4.2 The effort required to lift the load (3)

2.4.3 Draw a sketch of the pulley system (2)

2.5 Determine the reaction of the support **L** for the beam, as shown in the diagram below:

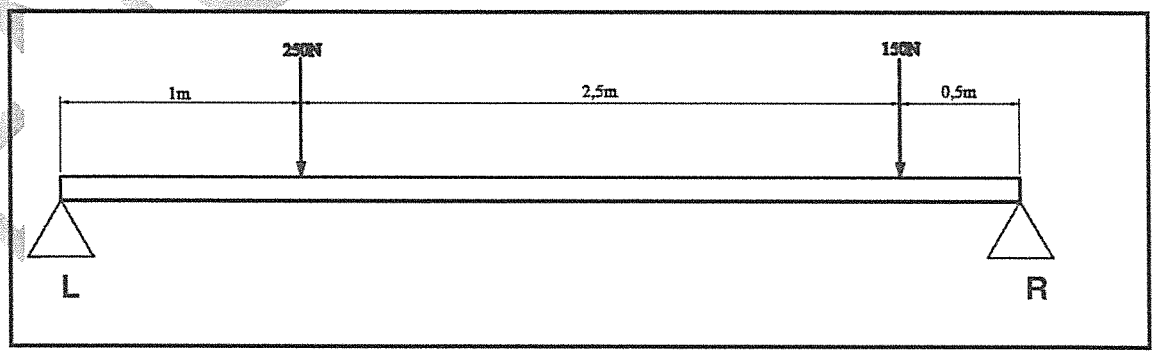

(3)
[13]

ENGINEERS

QUESTION 3

3.1 Define the following terms:

3.1.1 Potential energy

3.1.2 Conservation of energy

(2 × 2) (4)

3.2 A horizontal force of 230 N is required to pull a trolley 30 m, at constant speed, across a horizontal surface in 40 s.

Calculate the following:

3.2.1 The work done

3.2.2 The speed of the trolley

3.2.3 The power required

(3 × 2) (6)

3.3 Define a *Joule*. (1)

3.4 A person holds an object with a mass of 2 kg for 15 seconds in his hand.

Calculate the work done. (1)

[12]

QUESTION 4

4.1 Define *temperature*. (2)

4.2 When heat is added to, or removed from a substance, changes take place.

Name any TWO changes and ONE example of each. (4)

4.3 Copy the TABLE below and complete it by filling in the empty spaces numbered (4.3.1–4.3.6) to make comparisons between a mercury thermometer and a coloured alcohol thermometer:

COMPARE	MERCURY	COLOURED ALCOHOL
Boiling point	4.3.1	4.3.2
Colour	4.3.3	4.3.4
Sticks to class	4.3.5	4.3.6

(6 x 1) (6)

ENGINEERING

4.4 Give TWO useful application examples of linear expansion. (2)

4.5 Heat energy totalling about 58,5 kJ is absorbed by a copper cylinder with a mass of 2 kg. The initial temperature was 20 °C and the specific heat capacity of copper is 390 J/kg °C.

Calculate the following:

4.5.1 The rise in temperature

4.5.2 The final temperature

(2 × 2) (4)
[18]

QUESTION 5

5.1 Define *matter.* (2)

5.2 Draw a labelled sketch to explain what an atom is. (3)

5.3 What rotates around the nucleus (central core), protons or electrons? (1)

5.4 Compare the rigidity and compressibility in each of the THREE phases of matter. (6)

5.5 Define an *element.* (2)
[14]

QUESTION 6

6.1 Distinguish between *conductors* and *insulators.* (2)

6.2 Which is a better conductor, a gold or copper one? (1)

6.3 Draw symbols for each of the following:

6.3.1 Cell

6.3.2 Voltmeter

6.3.3 Resistor

6.3.4 Single pole switch

(4 × 1) (4)

6.4 Explain how you would connect a voltmeter in a circuit. (2)

ENGINEERING

Copyright reserved

6.5 Define the term *potential difference.* (1)

6.6 State Ohm's law. (3)

6.7 Give TWO examples of situations where the heating effect of an electric current is disadvantageous. (2)

6.8 What will happen to the resistance of a conductor if its length is doubled? (1)

6.9 What effect will an increase in temperature have on the resistance of each of the following?

6.9.1 Copper

6.9.2 An insulator

6.9.3 A conductor

(3 × 1) (3)

6.10 An electric heater generates 500 kJ in FIVE minutes.

If the current flow is 7,5 A, determine the resistance of the element. (4)

6.11 An electric kettle is rated at 220 volts, 500 watts.

Calculate the following:

6.11.1 The current that it would draw from the supply (2)

6.11.2 The resistance of the element (3)
[28]

TOTAL: 100

ENGINEERING

Copyright reserved

ENGINEERING SCIENCE N1

FORMULA SHEET

Any applicable formula may also be used.

1. $v = \frac{s}{t}$
2. $F = m.g$
3. $DR = \frac{E_{dist.}}{L_{dist.}}$ $\quad VV = \frac{M_{afst.}}{L_{afst.}}$
4. $MA = \frac{L}{E}$ $\quad HV = \frac{L}{M}$
5. $VR = \frac{D}{d}$ $\quad SV = \frac{D}{d}$
6. $MOMENT = F.s$
7. $T = F.R$
8. $W = F.S$
9. $P = \frac{W}{t}$
10. $P = F.v$
11. $Q = m.c.\Delta t$
12. $L_f = L_o + \Delta L$
13. $L_f = L_o - \Delta L$
14. $P = V.I$
15. $P = I^2.R$
16. $P = \frac{V^2}{R}$
17. $Q = P.t$
18. $I = \frac{V}{R}$
19. $R_t = R_1 + R_2 \ldots$
20. $\frac{1}{R_t} = \frac{1}{R_1} + \frac{1}{R_2} \ldots$

ENGINEERING

Copyright reserved

higher education & training

Department:
Higher Education and Training
REPUBLIC OF SOUTH AFRICA

MARKING GUIDELINE

NATIONAL CERTIFICATE

NOVEMBER EXAMINATION

ENGINEERING SCIENCE N1

18 NOVEMBER 2014

This marking guideline consists of 8 pages.

Copyright reserved

QUESTION 1

1.1 1.1.1 True
1.1.2 False
1.1.3 True
1.1.4 True

(2)

1.2 $125N - 105N = 20N$ √ Upwards√ (½ mark each) (1)

1.3 No,√ distance is actual route and displacement is the straight line between the beginning and end.√ (2)

1.4
$$v = \frac{s}{t}$$
$$s = vt$$
$$s = 355 \times 3,5$$
$$s = 1242,5m$$
(2)

1.5 1.5.1

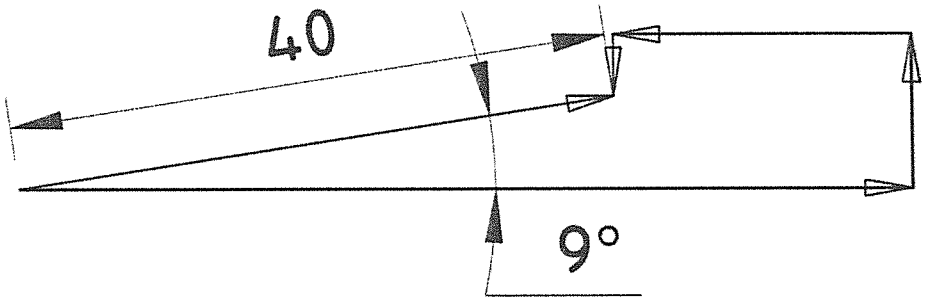

(2)

1.5.2 $60 + 10 + 20 + 4 = 94km$ (1)

1.5.3 $40\ km$ (1)

1.5.4
$$v = \frac{s}{t}$$
$$v = \frac{94 \times 1000}{90 \times 60}$$
$$v = 17,407m/s$$
$$v = 62,667km/h$$
(2)

1.5.5
$$v = \frac{s}{t}$$
$$v = \frac{40 \times 1000}{90 \times 60}$$
$$v = 7,407\ m/s$$
$$v = 26,667\ km/h$$
(2)
[15]

Copyright reserved

QUESTION 2

2.1 A system is *two or more forces acting on a body*√ (1)

2.2 When a system of force *acts on a point and it remains at rest,*√ the forces are in equilibrium. (1)

2.3

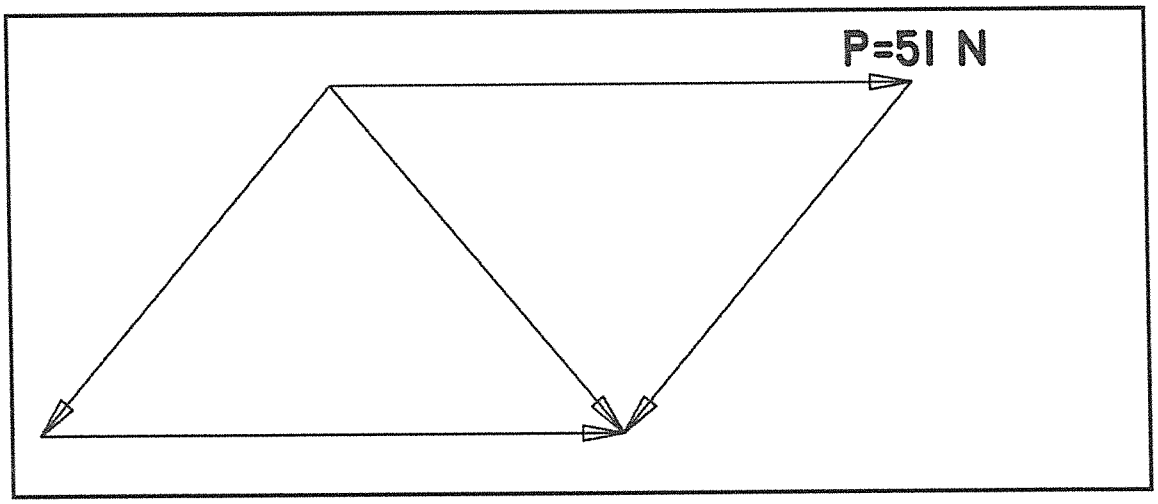

(2)

2.4 2.4.1 Amount of pulleys: 4 (1)

2.4.2

$$MA = \frac{L}{E}$$

$$E = \frac{L}{MA}$$

$$E = \frac{1300}{3,2}$$

$$E = 406,25N$$

(3)

Copyright reserved

2.4.3

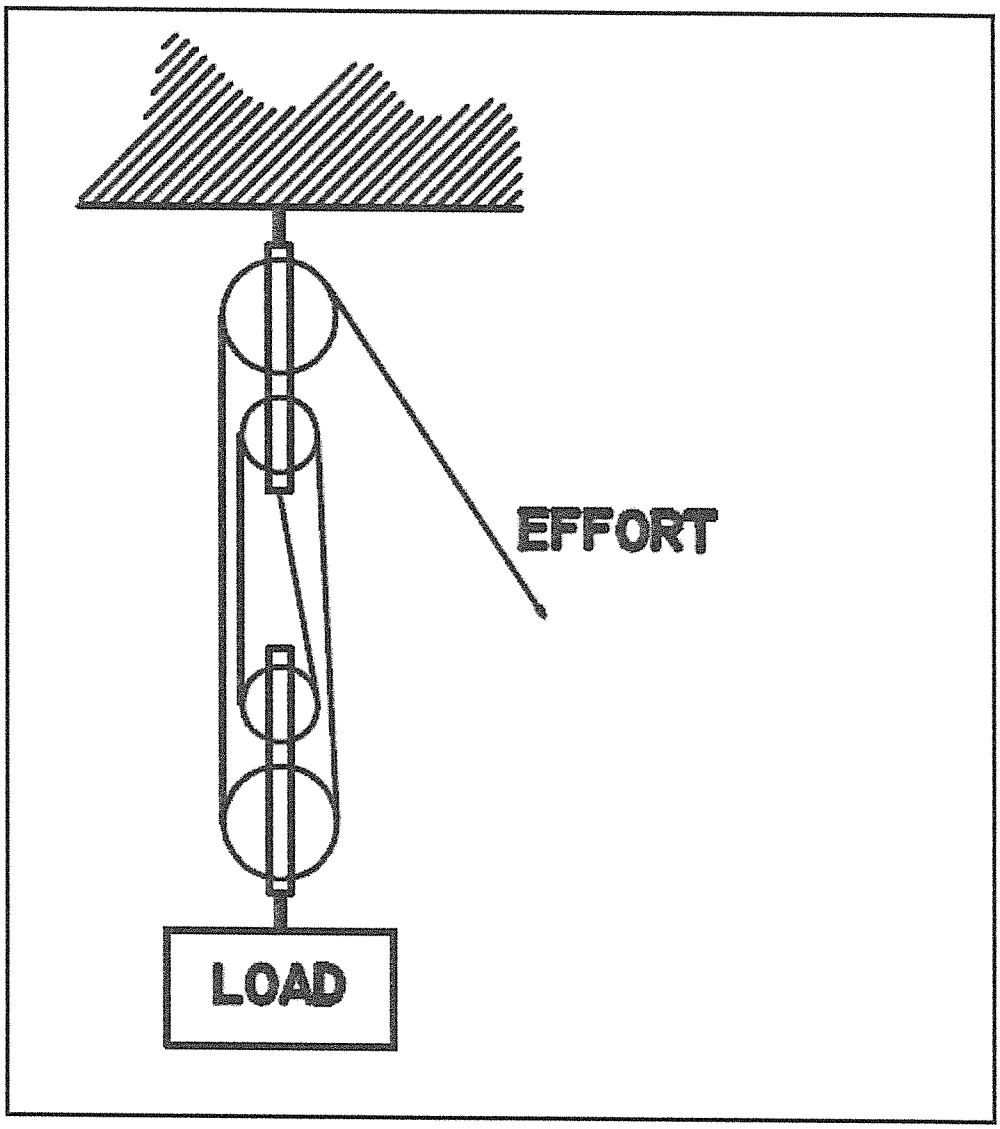

(2)

2.5 Moment about R:

$$4L = 0{,}5(150) + 3(250)$$

$$L = \frac{825}{4}$$

$$\underline{L = 206{,}5\ N}$$

(3)
[13]

Copyright reserved

QUESTION 3

3.1 3.1.1 Potential Energy is the energy that a body possesses by virtue *of its position or state* √.

3.1.2 Conservation of Energy means energy cannot be *created* √ or *destroyed,*√ ; it can only be *transferred from one form to another.*√

(2 x 2) (4)

3.2 3.2.1

$$W = F \times s$$
$$W = 230 \times 30$$
$$W = 6{,}9kJ$$

3.2.2

$$v = \frac{s}{t}$$
$$v = \frac{30}{40}$$
$$v = 0{,}75m/s$$

3.2.3

$$P = \frac{W}{t}$$
$$P = \frac{6900}{40}$$
$$P = 172{,}5W$$

(3 × 2) (6)

3.3 A force of 1N √ that moves over a distance of 1 m.√ (½ mark each) (1)

3.4 NO work done; NO displacement. (1)
[12]

QUESTION 4

4.1 Temperature can be defined as: how *hot* √ *or cold* √ a body is. (2)

4.2 Temperature changes: In the Heating of water or metals.

Colour changes:
Heated iron changes colour.

Volume changes:
Expansion of metals.

Change of phase:
Ice to liquid to gas.

Change of resistance:
Resistance of most conductors increases with an increase of temperature.

(Any 2 x 2) (4)

Copyright reserved

4.3

COMPARE	MERCURY	COLOURED ALCOHOL
Boiling point	4.3.1 360 °C√	4.3.2 80 °C√
Colour	4.3.3 Silver√	4.3.4 Transparent√
Sticks to class	4.3.5 No√	4.3.6 Yes√

(6)

4.4 Shrinking of ring gears onto the flywheel,√
Steel tyres onto the steel railway wheels.√ (2)

4.5 4.5.1 $Q = mc\Delta t$

$$\Delta t = \frac{Q}{mc}$$

$$\Delta t = \frac{58500}{2 \times 390}$$

$$\Delta t = 75°C$$

4.5.2 $\Delta t = t_2 - t_1$

$t_2 = \Delta t + t_1$

$= 75 + 20$

$= 95°C$

(2 × 2) (4)
[18]

QUESTION 5

5.1 Matter is that which has weight/mass√ and occupies√ space.
(½ mark each) (1)

5.2

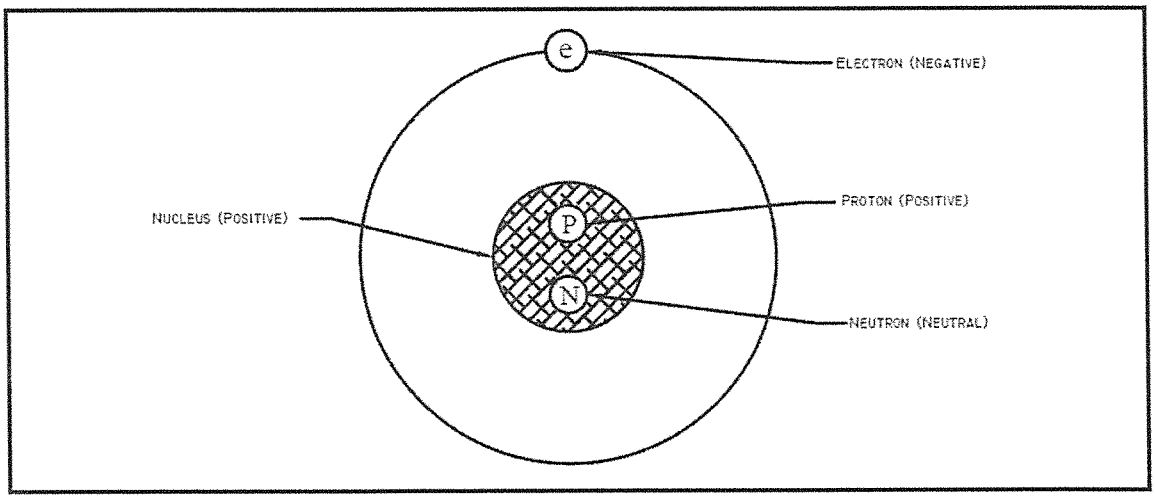

(3)

5.3 Electrons√ (1)

5.4

	SOLID	LIQUID	GASEOUS
Rigidity	Rigid√	No lasting rigidity√	No rigidity√
Compressibility	Virtually uncompressible√	Virtually uncompressible√	Compresses easily√

(6)

5.5 An element is a substance that contains one kind of atom.√ (1)
[12]

QUESTION 6

6.1 A conductor is a substance through which electrical current can flow easily.√
An insulator is a substance which prevents the flow of a current.√ (2)

6.2 A Gold conductor.√ (1)

6.3 6.3.1 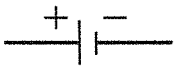

6.3.2 

6.3.3  or 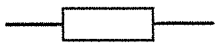

6.3.4 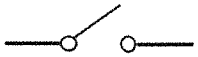

(4 × 1) (4)

6.4 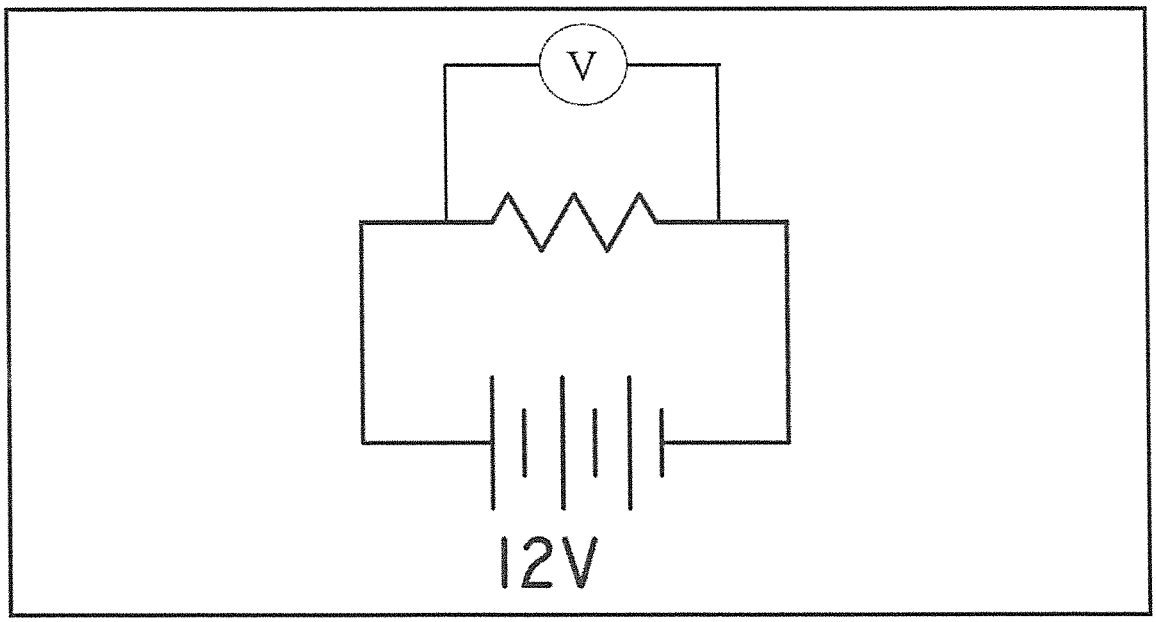

(2)

6.5 It is that which causes the current to flow√. (1)

6.6 The current flowing in a circuit is proportional to the applied voltage√ and inversely proportional√ to the resistance of the circuit.√ (3)

6.7 Heating up of motors, generators and transformers. (Any 2 × 1) (2)

6.8 The resistance increases.. (1)

6.9 6.9.1 Copper: resistance ***increases***√

6.9.2 An insulator: resistance ***decreases***√

6.9.3 A conductor: resistance ***increases***√

(3 × 1) (3)

6.10 $Q = I^2Rt$

$R = \frac{Q}{I^2t}$

$R = \frac{500000}{7,5 \times 7,5 \times 300}$

$R = 29,63 ohms$ (4)

6.11 6.11.1 $P = VI$

$I = \frac{P}{V}$

$I = \frac{500}{220}$

$I = 2,27\ A$ (4)

6.11.2 $R = \frac{V}{I}$

$R = \frac{220}{2,27}$

$R = 96,92\ ohm$ (3)

[30]

TOTAL: 100

Copyright reserved