higher education & training

Department:
Higher Education and Training
REPUBLIC OF SOUTH AFRICA

NASIENRIGLYN

NASIONALE SERTIFIKAAT

INGENIEURSTEKENE N2

22 MAART 2018

Hierdie nasienriglyn bestaan uit 7 bladsye.

Kopiereg voorbehou

INSTRUKSIES EN INLIGTING

1. Kopiëring en oordrag van tekeninge van RGO na Word kan die akkuraatheid beïnvloed.

2. ALLE nasieners moet 'n volledig voltooide nasienriglyn hê om in die nasienproses te gebruik.

VRAAG 1: DRADE, AFKORTINGS, SWEISWERK

NASIENKRITERIA		PUNTETOEKENNING
1.1.1-1.1.6	Proporsie/verhouding	**6**
1.2.1-1.2.3	Afkortings	**3**
1.3	Sweiswerk	**3**
1.4	Sweislaste	**5**
	TOTAAL	**17**

VRAAG 1: DRADE, AFKORTINGS, SWEISWERK

1.1
1.1.1 1,5 × D
1.1.2 0,7 × D
1.1.3 0,8 × D
1.1.4 0,1 × D
1.1.5 0,3 × D
1.1.6 0,3 × D

(6 × 1) (6)

1.2
1.2.1 SSD/SSM
1.2.2 ML
1.2.3 BD/BM

(3 × 1) (3)

1.3 Dit is waar sweiswerk langs die hele lengte van die las gedoen moet word, ✓ ongeag die vorm van die las, ✓ en dit word deur 'n simbool op die tekening aangedui. ✓ (3)

1.4
- Stuiklas
- Oorslaglas
- T-las
- Hoekvoeg/hoeklas
- Kantvoeg/kantlas

(5)
[17]

VRAAG 2: SKROEFDRADE

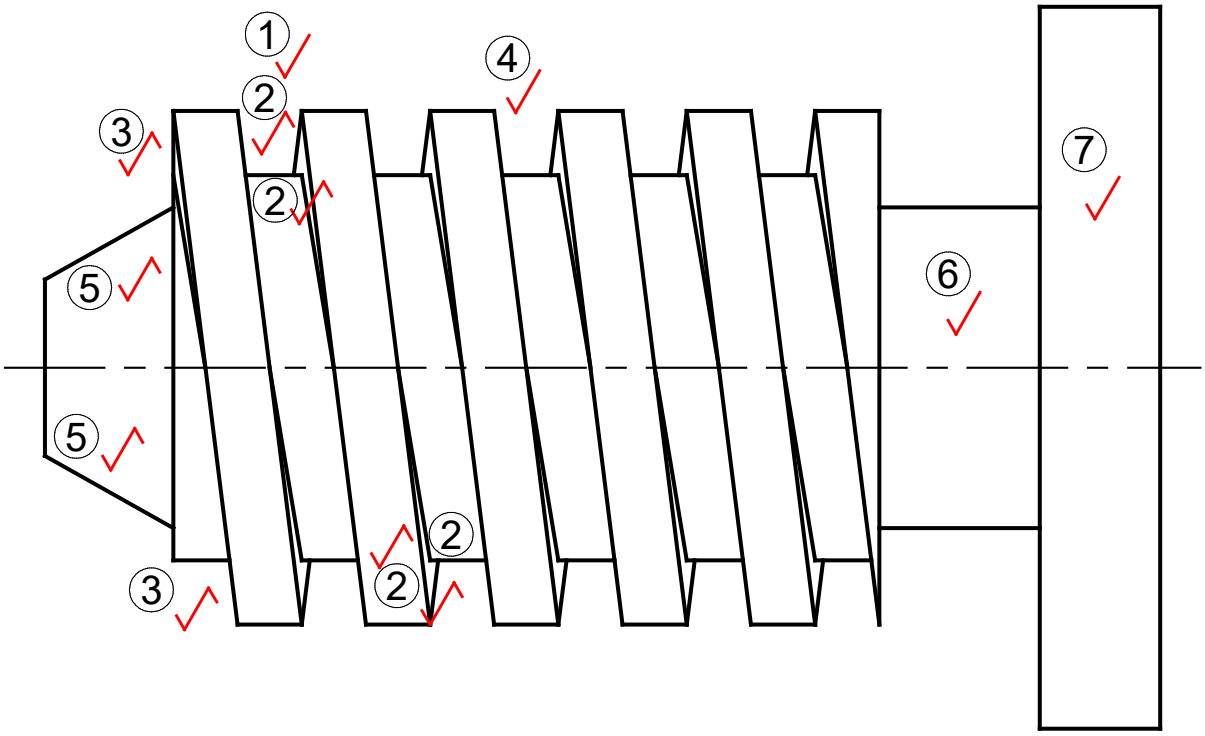

MARKING CRITERIA			
	DIRECTION	①	1
	DETAIL	②	2
CORRECTNESS	START DETAIL	③	1
	PITCH	④	1
	FRONT STUB	⑤	1
	UNDERCUT	⑥	1
	SHOULDER	⑦	1
LINE WORK			2
ACCURACY			1
LAYOUT AND NEATNESS			1
		TOTAL	12

[12]

VRAAG 3: EERSTEHOEKSE ORTOGRAFIESE PROJEKSIE

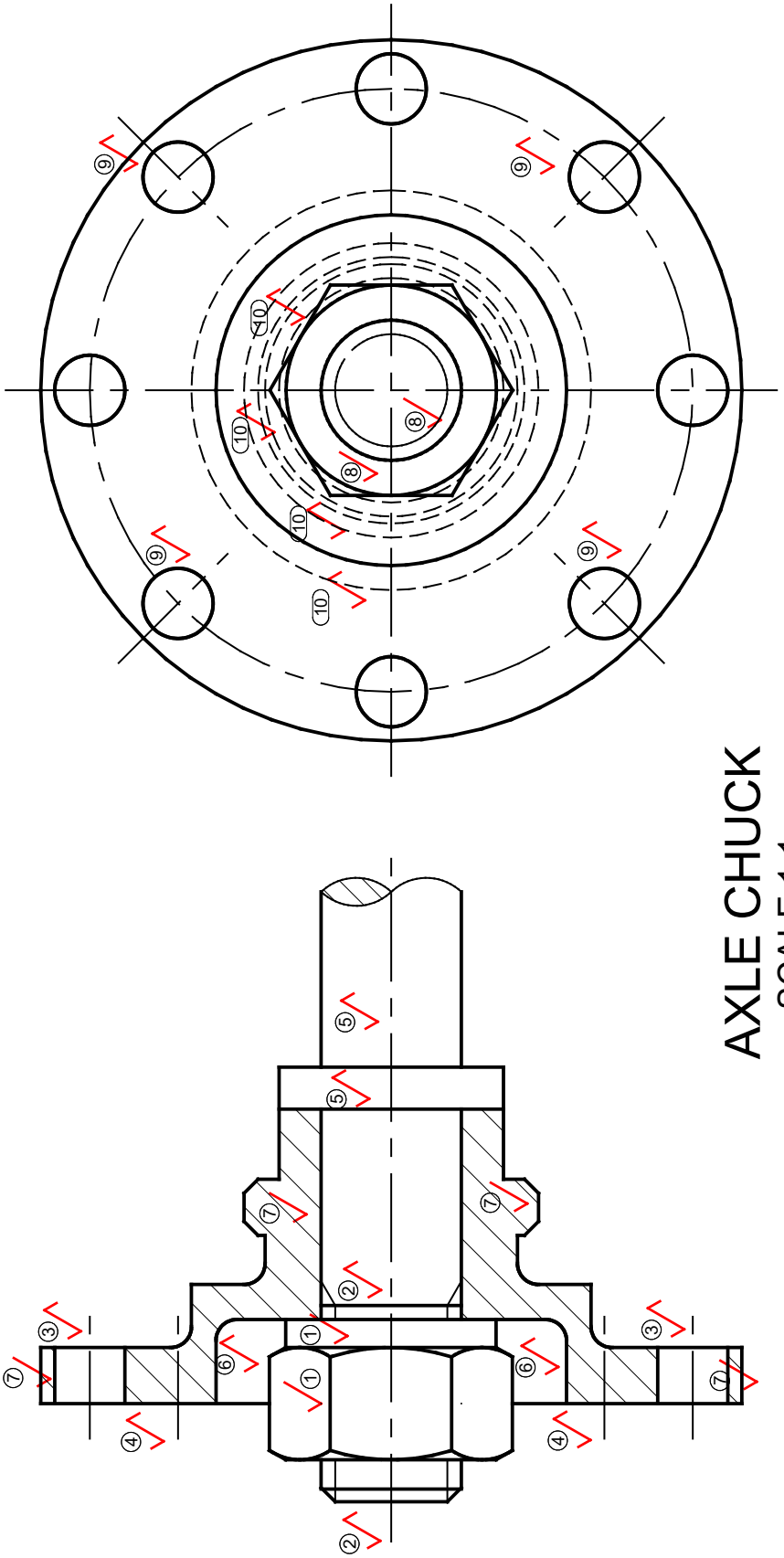

AXLE CHUCK
SCALE 1:1

MARKING CRITERIA			
FRONT VIEW	CORRECTNESS	M20 NUT AND WASHER IN POSITON	① 2
		THREAD BEFORE AND AFTER NUT	② 1
		Ø10 HOLES	③ 1
		CENTRE LINE OF HOLES	④ 1
		AXLE AND SHOULDER	⑤ 1
		AREA NOT SECTIONED	⑥ 1
		HATCHING	⑦ 4
	ACCURACY		1
	LINE WORK		1

MARKING CRITERIA			
LEFT VIEW	CORRECTNESS	M20 NUT AND THREAD OF SHAFT	⑧ 2
		Ø10 x 8 (½ MARK PER 2 HOLES)	⑨ 2
		HIDDEN DETAIL	⑩ 2
	ACCURACY		1
	LINE WORK		1
PRINTING OF TITLE & SCALE CENTRALLY BENEATH LAYOUT			2
ORTHOGRAPHIC PROJECTION SYMBOL			1
LAYOUT AND NEATNESS			1
		TOTAL	25

[25]

VRAAG 4: ISOMETRIES

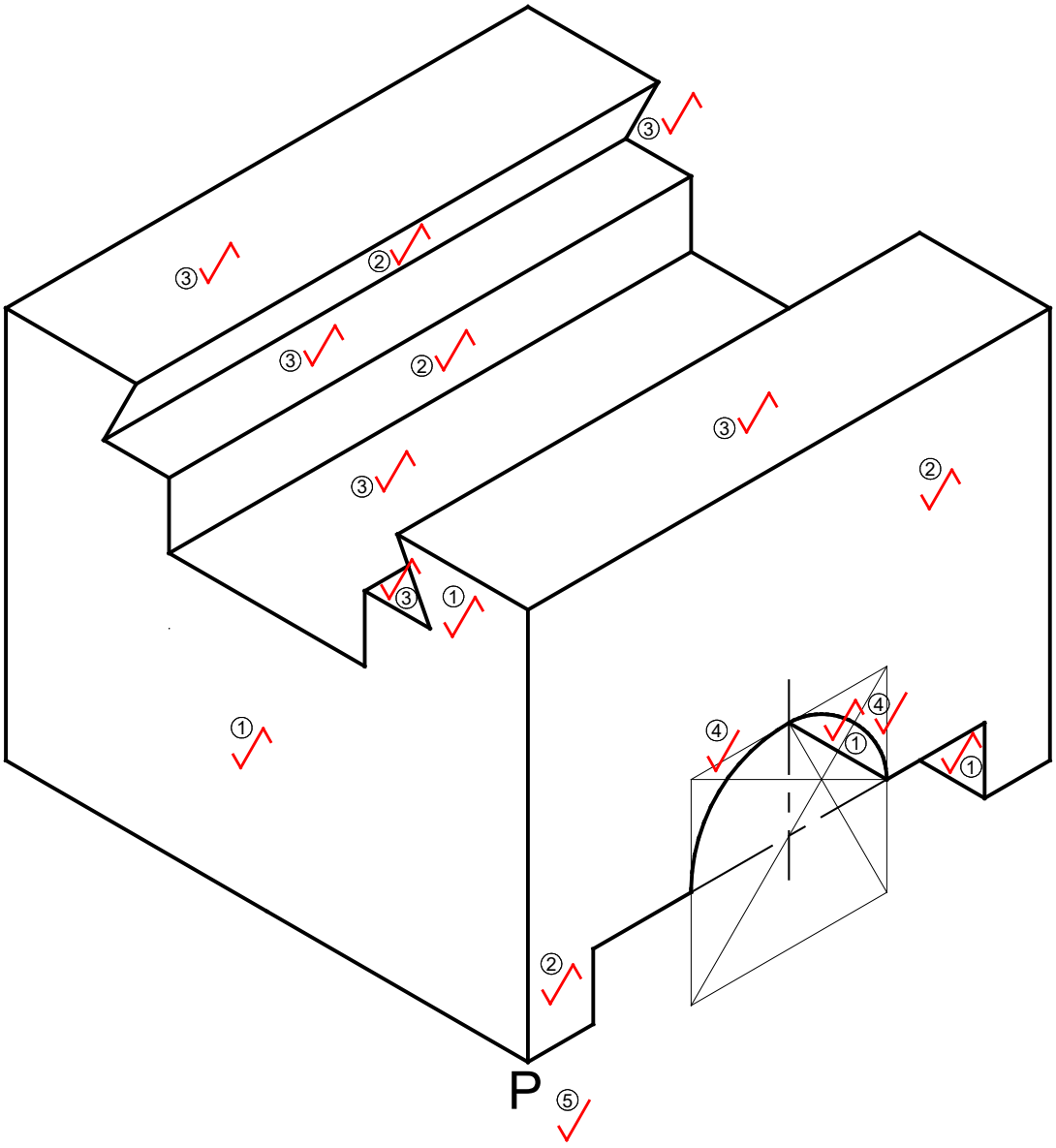

MARKING CRITERIA			
CORRECTNESS	LEFT PLANE	①	2
	FRONT PLANE	②	2
	TOP PLANE	③	3
	SEMI-CIRCLE	④	2
POINT P		⑤	1
LINE WORK			2
ACCURACY			1
LAYOUT AND NEATNESS			1
		TOTAL	14

[14]

VRAAG 5: INTERPENETRASIE

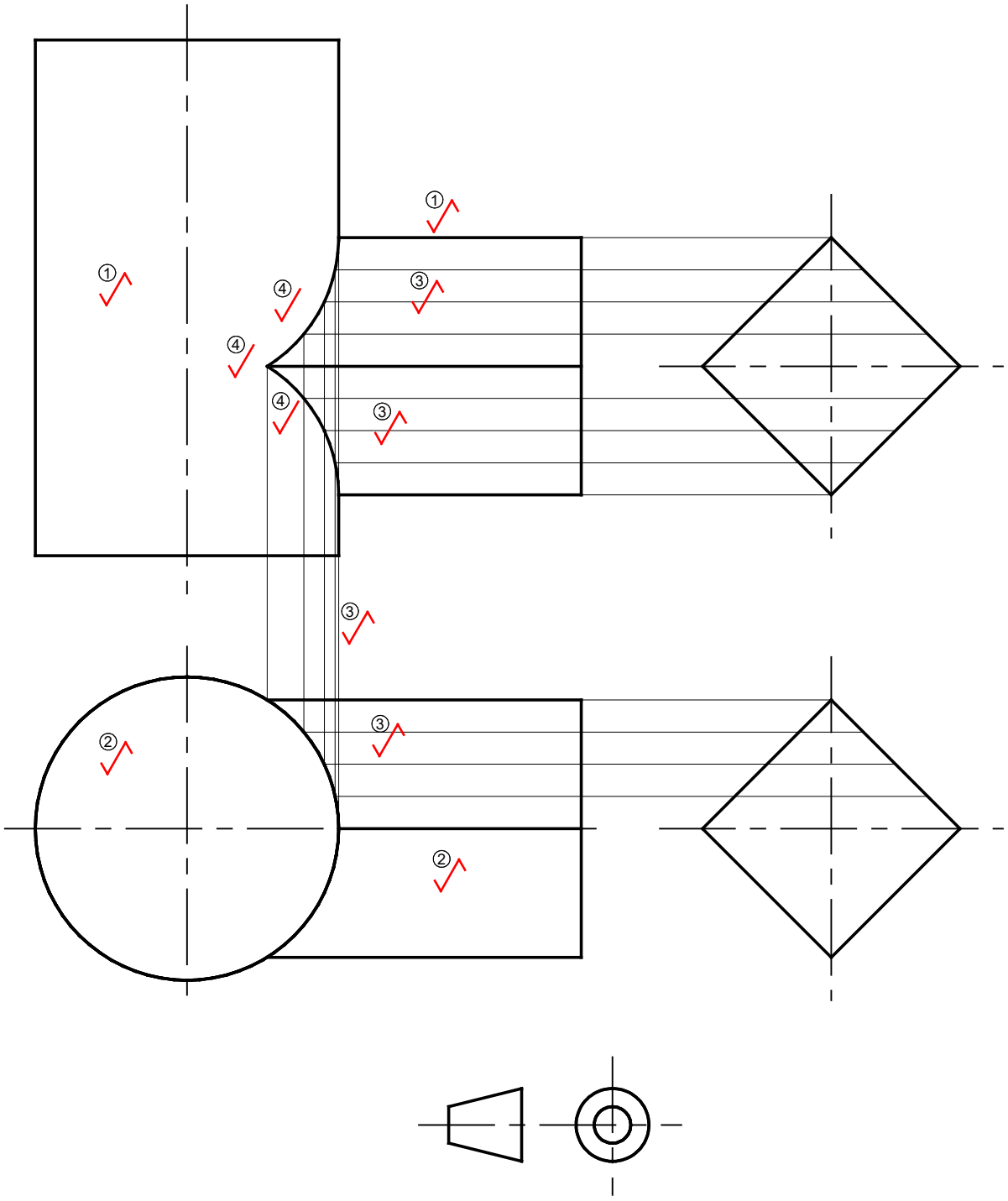

MARKING CRITERIA			
CORRECTNESS	FRONT VIEW	①	1
	TOP VIEW	②	1
CONSTRUCTION LINES FOR CURVE		③	2
INTERPENETRATION CURVE		④	3
LINE WORK			2
ACCURACY			2
LAYOUT AND NEATNESS			1
		TOTAL	12

[12]

VRAAG 6: DERDEHOEKSE ORTOGRAFIESE PROJEKSIE EN MASJIENSIMBOLE

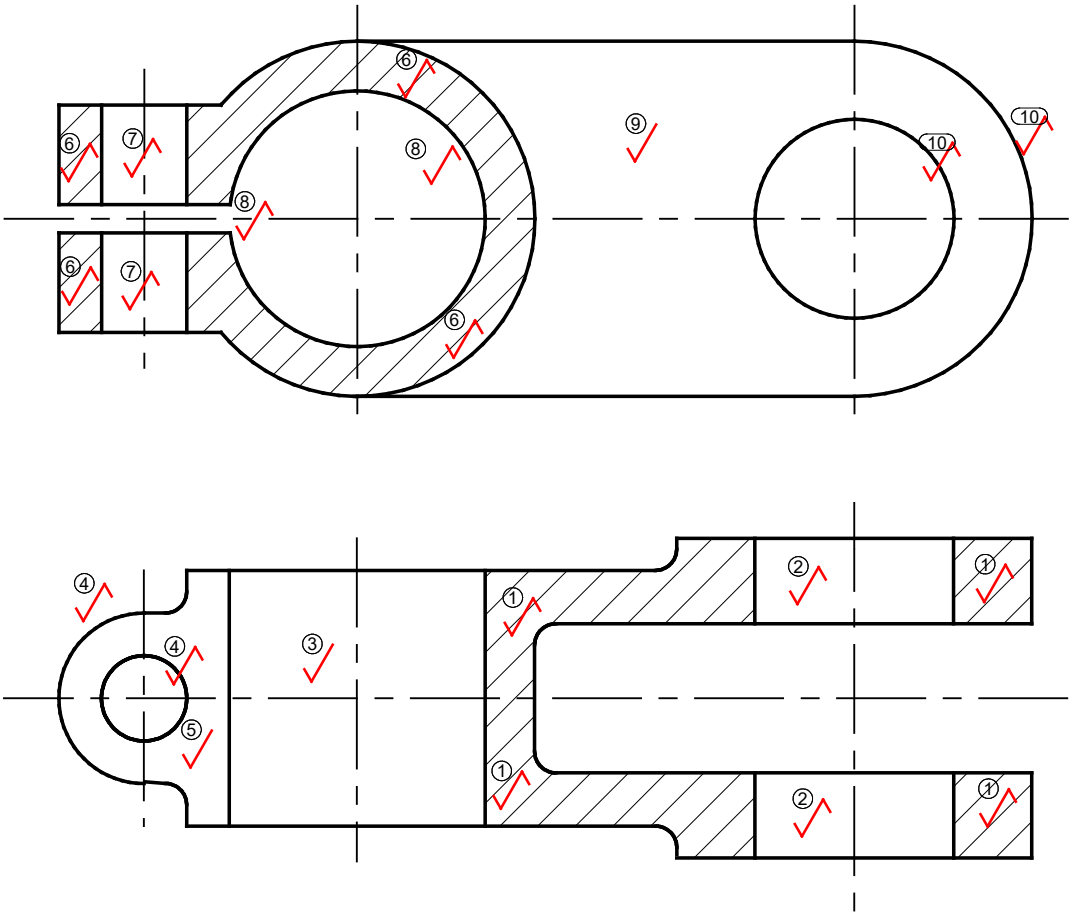

	MARKING CRITERIA			
FRONT VIEW	CORRECTNESS	HATCHING	①	2
		Ø28 HOLE	②	1
		Ø36 HOLE	③	1
		Ø12 HOLE AND OUTLINE	④	1
		AREA NOT SECTIONED	⑤	1
	ACCURACY			1
	LINE WORK			1
TOP VIEW	CORRECTNESS	HATCHING	⑥	2
		Ø12 HOLES	⑦	1
		4 MM GAP & Ø36 HOLE	⑧	1
		AREA NOT SECTIONED	⑨	1
		Ø28 HOLE AND OUTLINE	⑩	1
	ACCURACY			1
	LINE WORK			1
PRINTING OF TITLE AND SCALE CENTRALLY BENEATH LAYOUT				2
ORTHOGRAPHIC PROJECTION SYMBOL				1
LAYOUT AND NEATNESS				1
			TOTAL	20

[20]

TOTAAL: 100

Kopiereg voorbehou