higher education & training

Department:
Higher Education and Training
REPUBLIC OF SOUTH AFRICA

# NATIONAL CERTIFICATE

# ENGINEERING DRAWING N2

(8090272)

**29 November 2019 (X-Paper)**
**09:00–13:00**

**This question paper consists of 10 pages.**

Copyright reserved

# DEPARTMENT OF HIGHER EDUCATION AND TRAINING
# REPUBLIC OF SOUTH AFRICA

NATIONAL CERTIFICATE
ENGINEERING DRAWING N2
TIME: 4 HOURS
MARKS: 100

---

**INSTRUCTIONS AND INFORMATION**

1. Answer ALL the questions.
2. Read ALL the questions carefully.
3. Number the answers according to the numbering system used in this question paper.
4. ALL drawings must be drawn neatly using drawing instruments, unless otherwise specified.
5. ALL drawings must conform to the latest SANS 10111 Code of Practice for Engineering Drawing.
6. A 15 mm border must be drawn on both sides of the paper.
7. Unspecified radii must be R3.
8. Candidates may use only their own drawing instruments.
9. ALL drawing and written work must be done in pencil. Only the candidates' information must be done in ink.
10. Use BOTH sides of the drawing sheet.
11. A balanced layout is very important and candidates will be penalised for poor planning.
12. Work neatly.

---

Copyright reserved 

## QUESTION 1: FUNDAMENTALS OF ENGINEERING DRAWING, ELECTRICAL FITTINGS AND WELDING SYMBOLS

**NOTE:** This question is to be answered directly onto the DRAWING SHEET and NOT a separate ANSWER BOOK.

1.1 Name any THREE drawing instruments required for the Engineering Drawing N2 Course. (3)

1.2 Give the general rule for the height of printing on a drawing for all titles or names of objects on drawings. (2)

1.3 Draw a metal 20 mm end box by means of a freehand drawing. (6)

1.4 Various threaded fasteners labelled (A–E) in the drawing below. Choose the correct fastener and write only the letter (A–E) next to the question number (1.4.1–1.4.5) on the ANSWER SHEET.

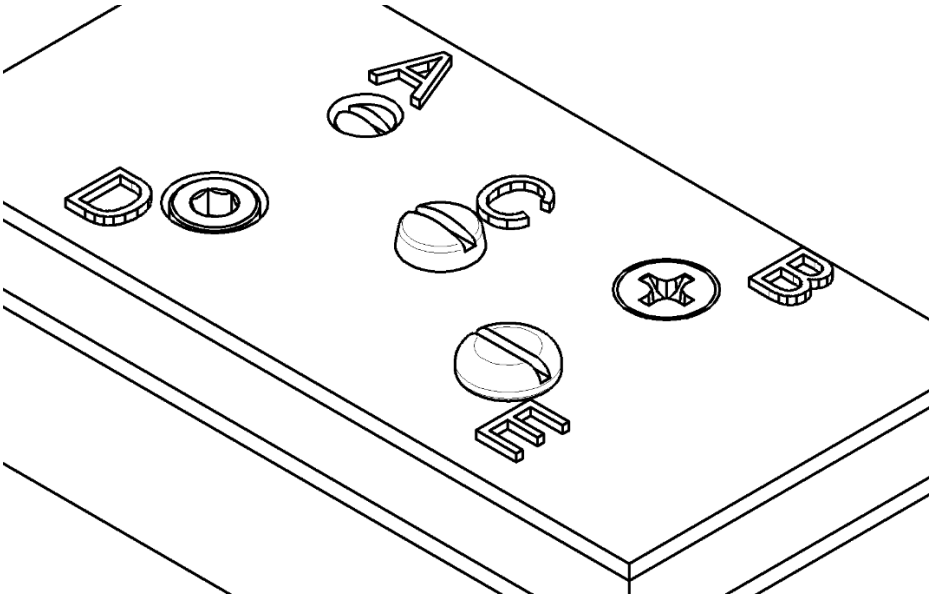


**FIGURE 1**

1.4.1 Which of the following machine screw heads in the sketch above indicated a cheese-head screw?

1.4.2 Which of the following machine screw heads in the sketch above indicated a fillister-head screw?

1.4.3 Which of the following machine screw heads in the sketch above indicated a countersunk-head screw?

1.4.4 Which of the following machine screw heads in the sketch above indicated a socket-head screw?

1.4.5 Which of the following machine screw heads in the sketch above indicated a round-head screw?

(5 × 1) (5)

**[16]**

Copyright reserved 

## QUESTION 2: SCREW THREADS

FIGURE 2 below shows an isometric view and an auxiliary view of a special square head bolt.

Draw in first angle orthographic projection the top view to scale 1:1.

Provide the M35 × 50 mm shank with a right-hand square-thread, with a pitch of 10 mm. (8)

Linework, accuracy, layout and neatness (4)

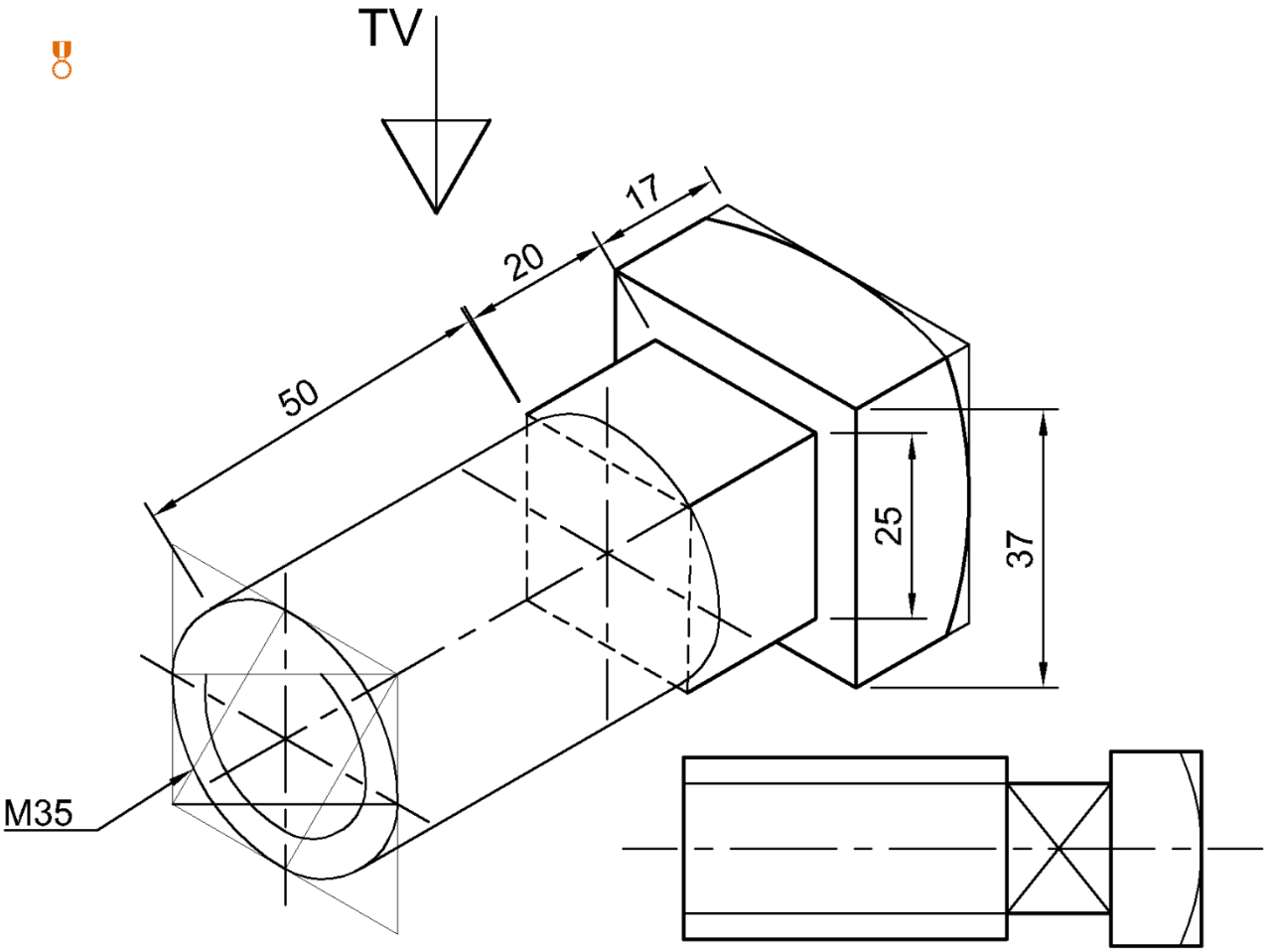


**FIGURE 2** **[12]**

## QUESTION 3: FIRST-ANGLE ORTHOGRAPHIC PROJECTION AND MACHINE SYMBOLS

FIGURE 3, on the next page shows in first-angle orthographic projection, a front view, left view and a top view of a connection hinge.

The connection hinge base and hinge are joined together by means of an M20 × 100 mm bolt and nut through the Ø20 holes.

The bolt and nut have been omitted.

Draw to scale 1:2 and in first-angle orthographic projection the following views:

3.1 A sectional front view, on cutting plane A-A, with the securing bolt and nut in position. (6)

3.2 A sectional top view, on cutting plane B-B, with the securing bolt and nut in position. (6)

3.3 Print the following title and scale centrally beneath the layout.

CONNECTION HINGE
SCALE: 1:2 (2)

3.4 Insert the first angle orthographic projection symbol below the title and scale. (1)

Linework, accuracy, layout and neatness (6)

Copyright reserved 

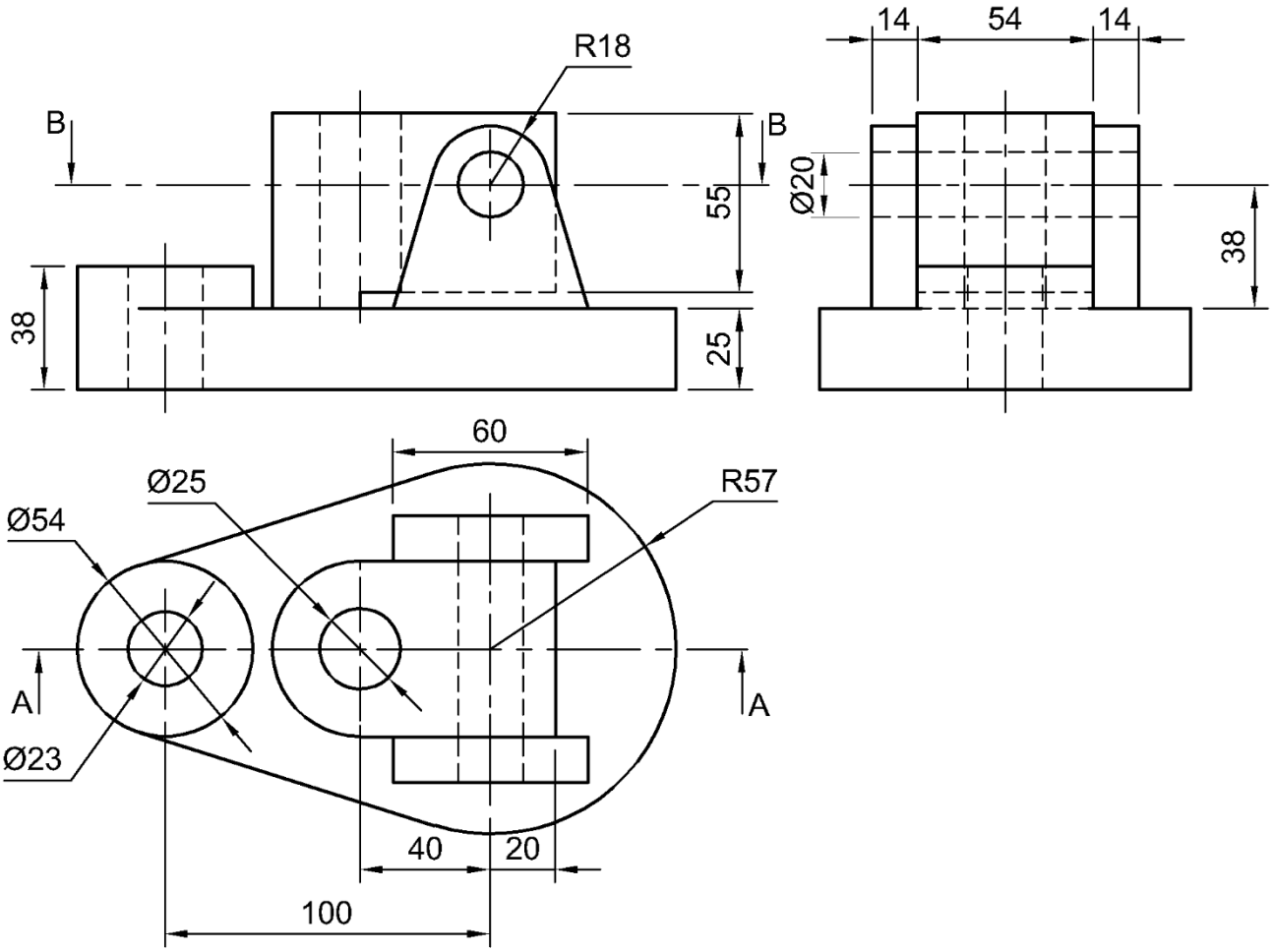


**FIGURE 3** **[21]**

Copyright reserved 

**QUESTION 4: ISOMETRIC**

FIGURE 4 below shows two views of a casting drawn in third-angle orthographic projection.

Do NOT draw the two views given, but draw to scale 1:1 an isometric view of the casting.

Point P must be the lowest point

NO hidden detail required.

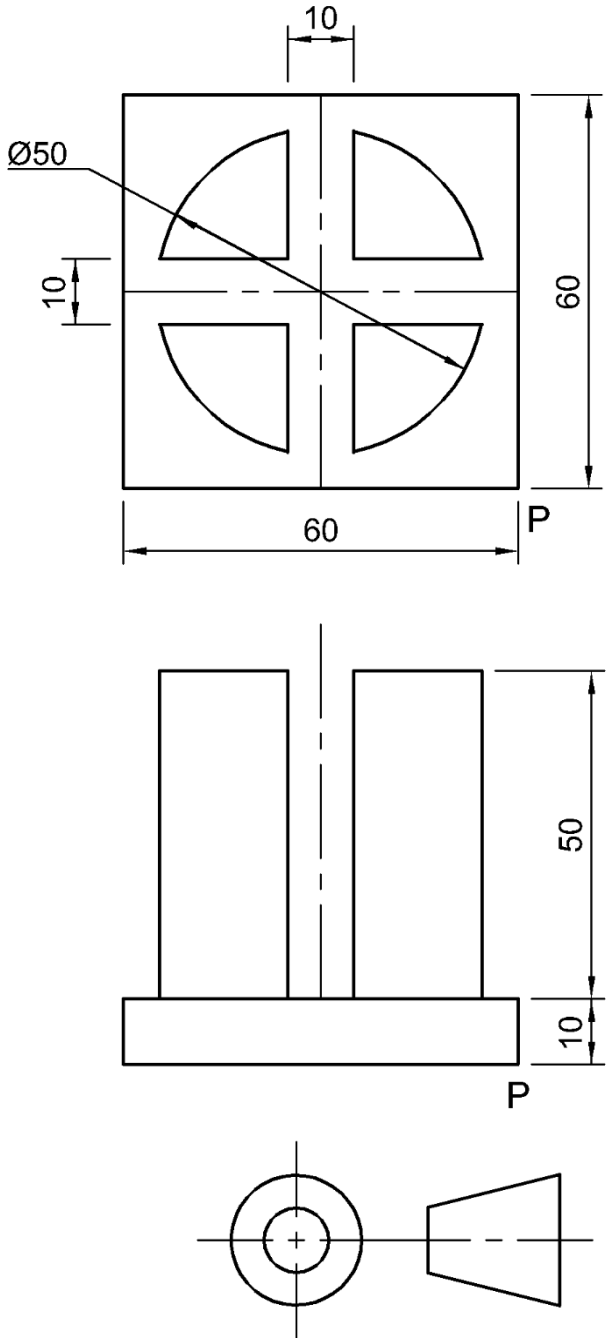


**FIGURE 4** **[14]**

## QUESTION 5: INTERPENETRATION

FIGURE 5 below shows two views of a cylindrical main pipe and square side pipe without interpenetration lines.

Redraw the TWO given views in third-angle orthographic projection to scale 1:1 and show the following:

5.1 The interpenetration curve on the front view

5.2 ALL construction lines needed to project the curve of interpenetration

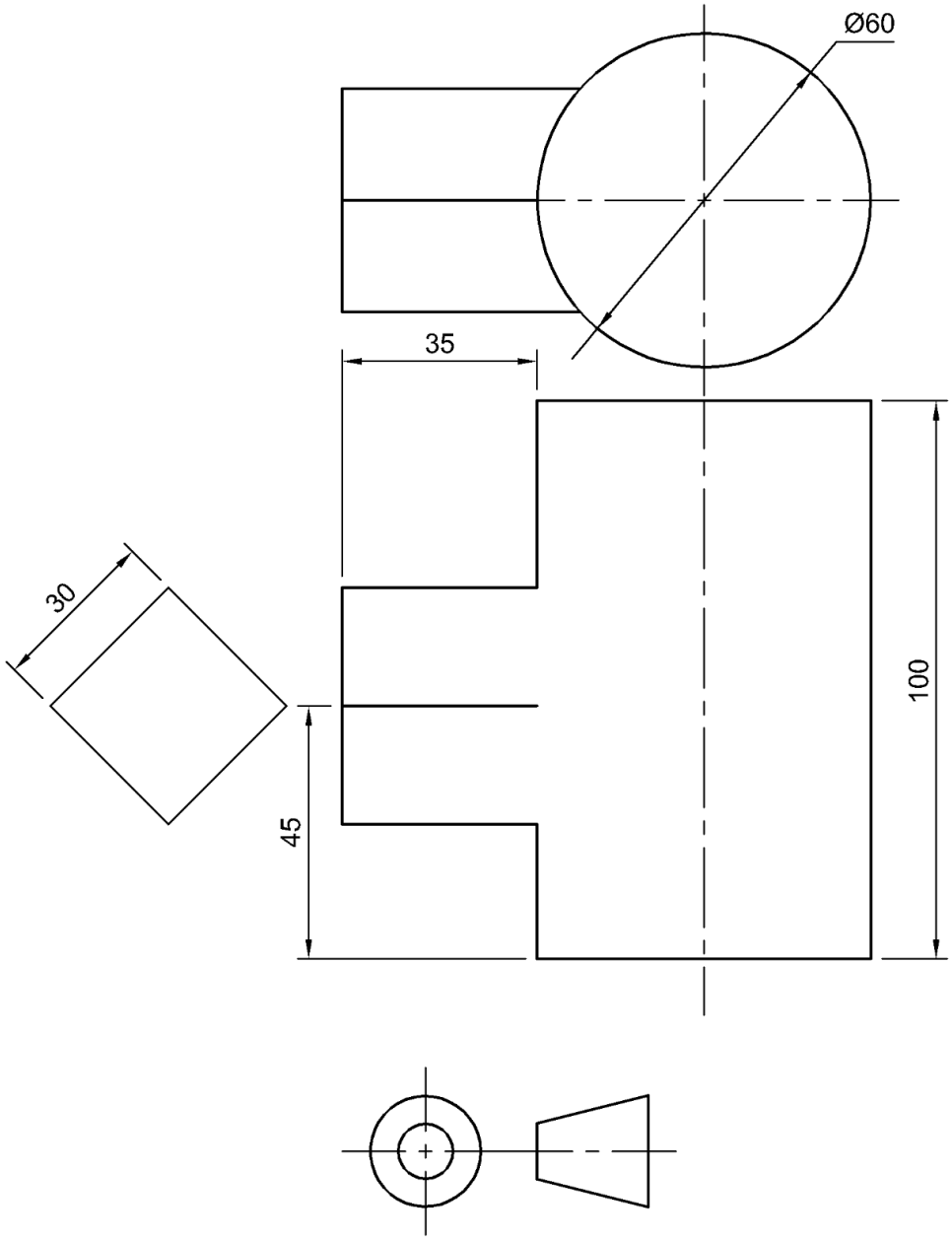


**FIGURE 5** **[13]**

## QUESTION 6: THIRD-ANGLE ORTHOGRAPHIC PROJECTION AND MACHINING SYMBOLS

FIGURE 6, on the next page shows TWO views of a pipe clamp bracket.

Draw to scale 1:1 and in third-angle orthographic projection, the following views of the pipe clamp bracket:

6.1 A full sectional front view. (6)

6.2 A full sectional right view. (5)

6.3 An outside top view, without hidden detail. (4)

6.4 Insert the third-angle orthographic projection symbol in a position below the title and scale (1)

6.5 At A: Add a machining symbol with a roughness value of 25 µm and the finish must be produced by grinding. (2)

Linework, Accuracy, Layout & Neatness (6)

Copyright reserved 

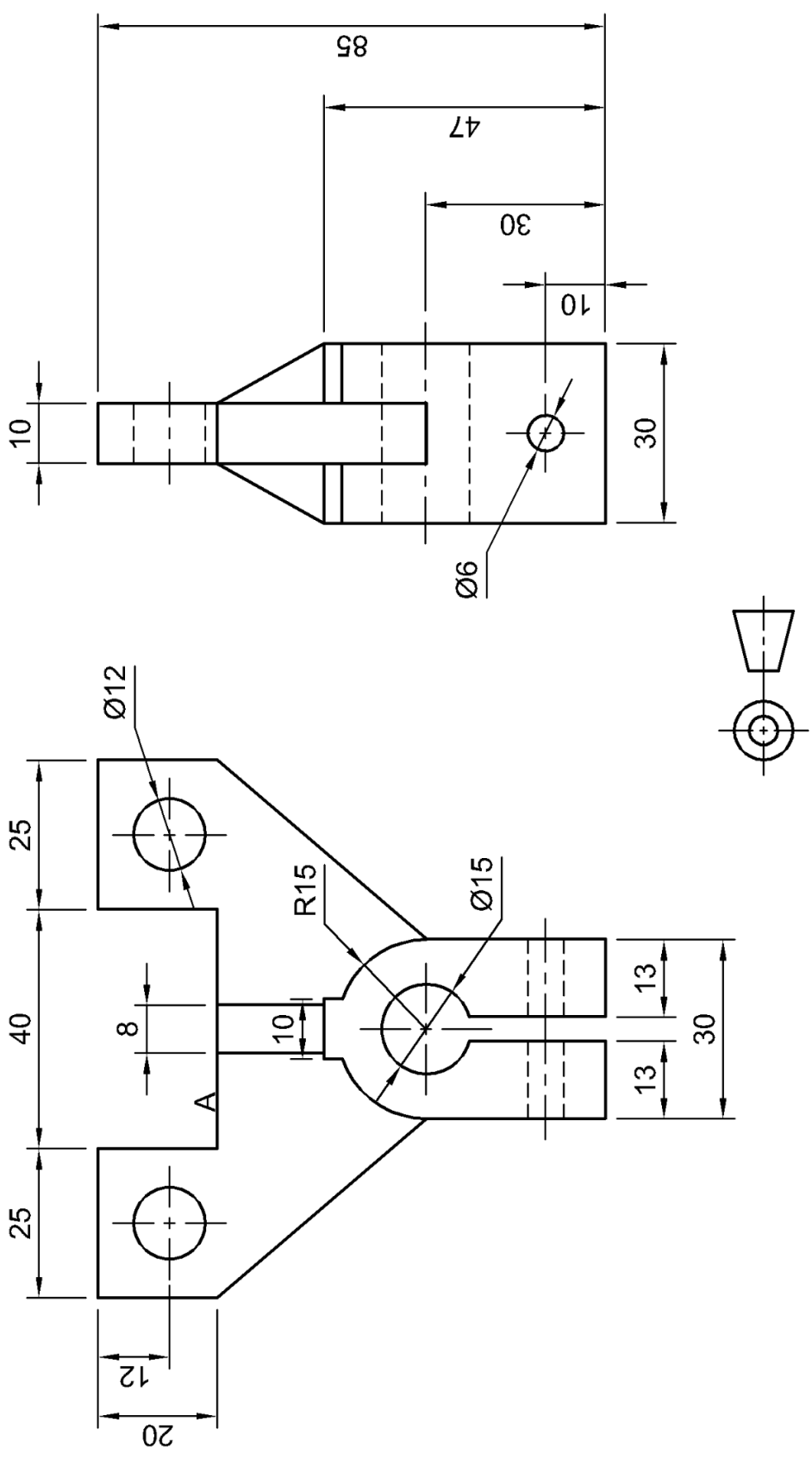


**FIGURE 6**

**[24]**

**TOTAL 100**

Copyright reserved