higher education & training

Department:
Higher Education and Training
REPUBLIC OF SOUTH AFRICA

NATIONAL CERTIFICATE

ENGINEERING DRAWING N2

(8090272)

12 August 2021 (X-paper)
09:00–13:00

REQUIREMENTS: A2 drawing sheets (BOE 8/20)

Drawing instruments may be used.

This question paper consists of 10 pages and 1 answer sheet.

290Q1G2112

Copyright reserved

DEPARTMENT OF HIGHER EDUCATION AND TRAINING
REPUBLIC OF SOUTH AFRICA

NATIONAL CERTIFICATE
ENGINEERING DRAWING N2
TIME:4 HOURS
MARKS: 100

INSTRUCTIONS AND INFORMATION

1. Answer all the questions.
2. Read all the questions carefully.
3. Number the answers according to the numbering system used in this question paper.
4. Use both sides of the DRAWING SHEET.
5. Draw a 15 mm border on both sides of the DRAWING SHEET.
6. All drawings to be drawn neatly using your own drawing instruments, unless otherwise specified.
7. Only the candidate information on the DRAWING SHEET must be done in ink. All other drawing work must be done in pencil.
8. All drawings must conform to the latest SANS 10111 Codes of Practice.
9. Unspecified radii must be R3.
10. A balanced layout is important, and candidates will be penalised for poor planning.
11. Work neatly.

Copyright reserved

QUESTION 1: FUNDAMENTALS OF ENGINEERING DRAWING, ELECTRICAL FITTINGS AND WELDING SYMBOLS

NOTE: Answer this question on the attached ANSWER SHEET and submit with DRAWING SHEET.

1.1 Write down the meaning of the following abbreviations:

1.1.1 CHAM

1.1.2 ASSY

1.1.3 CSK HD

(3 × 1) (3)

1.2 Name TWO types of CAD software used in engineering industry. (2)

1.3 Make a neat freehand drawing of a 20 mm PVC male adaptor. (5)

1.4 FIGURE 1 shows a joint with welding symbols.

1.4.1 Name the type of welded joint shown.

1.4.2 Write down what the THREE elements of the welding symbol represents in FIGURE 1.

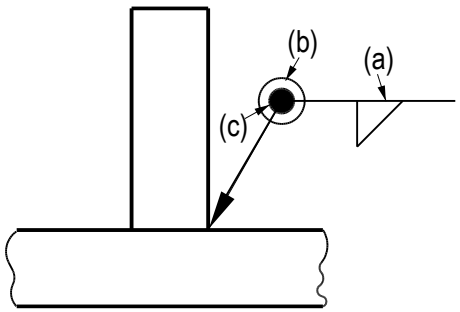

FIGURE 1

(4)
[14]

QUESTION 2: SCREW THREADS

FIGURE 2 (below) shows an incomplete front view of a tapered flange bolt.

Draw the given view to scale 1:1.Show a detailed construction of the right-hand square thread on Part S. The screw thread has a pitch of 14 mm.

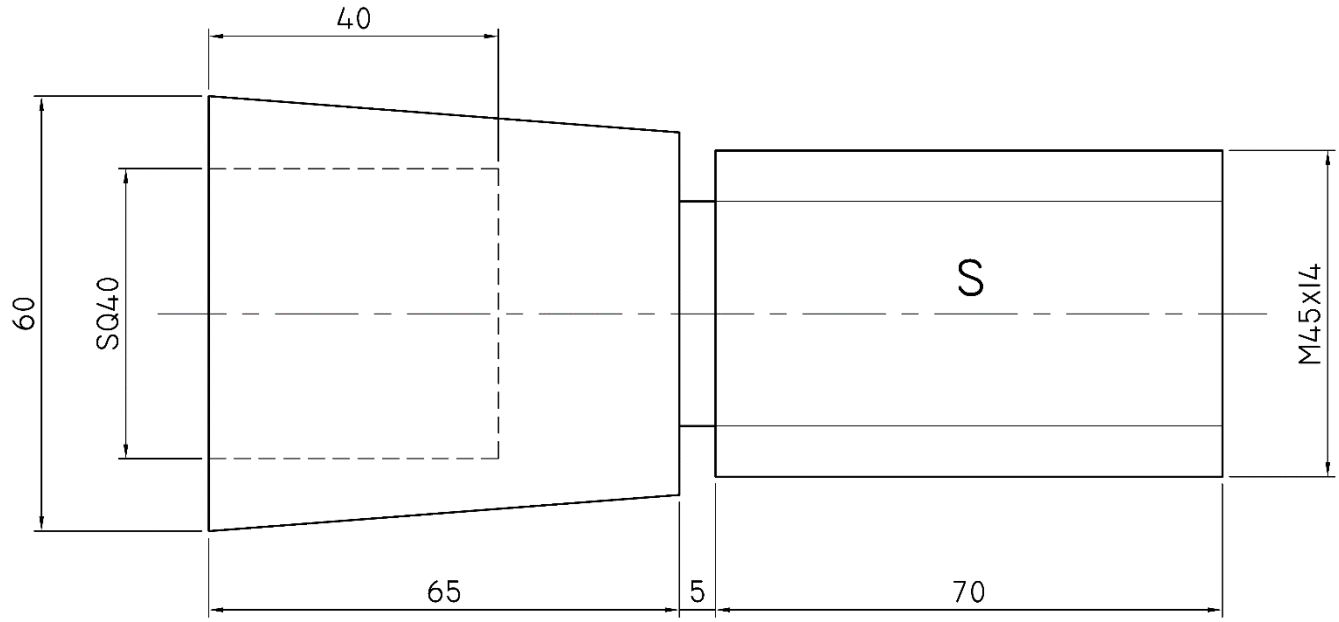

FIGURE 2 **[12]**

Copyright reserved

QUESTION 3: FIRST-ANGLE ORTHOGRAPHIC PROJECTION

FIGURE 3 (on the next page) shows a front view and top view of a pulley coupling in first-angle orthographic projection. The coupling is joined by means of two M10 bolts and hexagonal nuts. The bolts are in their correct working position however, the securing nuts have been omitted.

3.1 Draw, to scale 1:1, the following views in first-angle orthographic projection:

3.1.1 A full sectional front view on cutting plane B-B, with the securing nuts in position. (9)

3.1.2 A full sectional top view on cutting plane A-A (6)

3.2 Print the following title and scale centrally beneath the layout.

PULLEY COUPLING
SCALE 1:1 (2)

3.3 Layout, neatness, linework and accuracy (5)

Copyright reserved

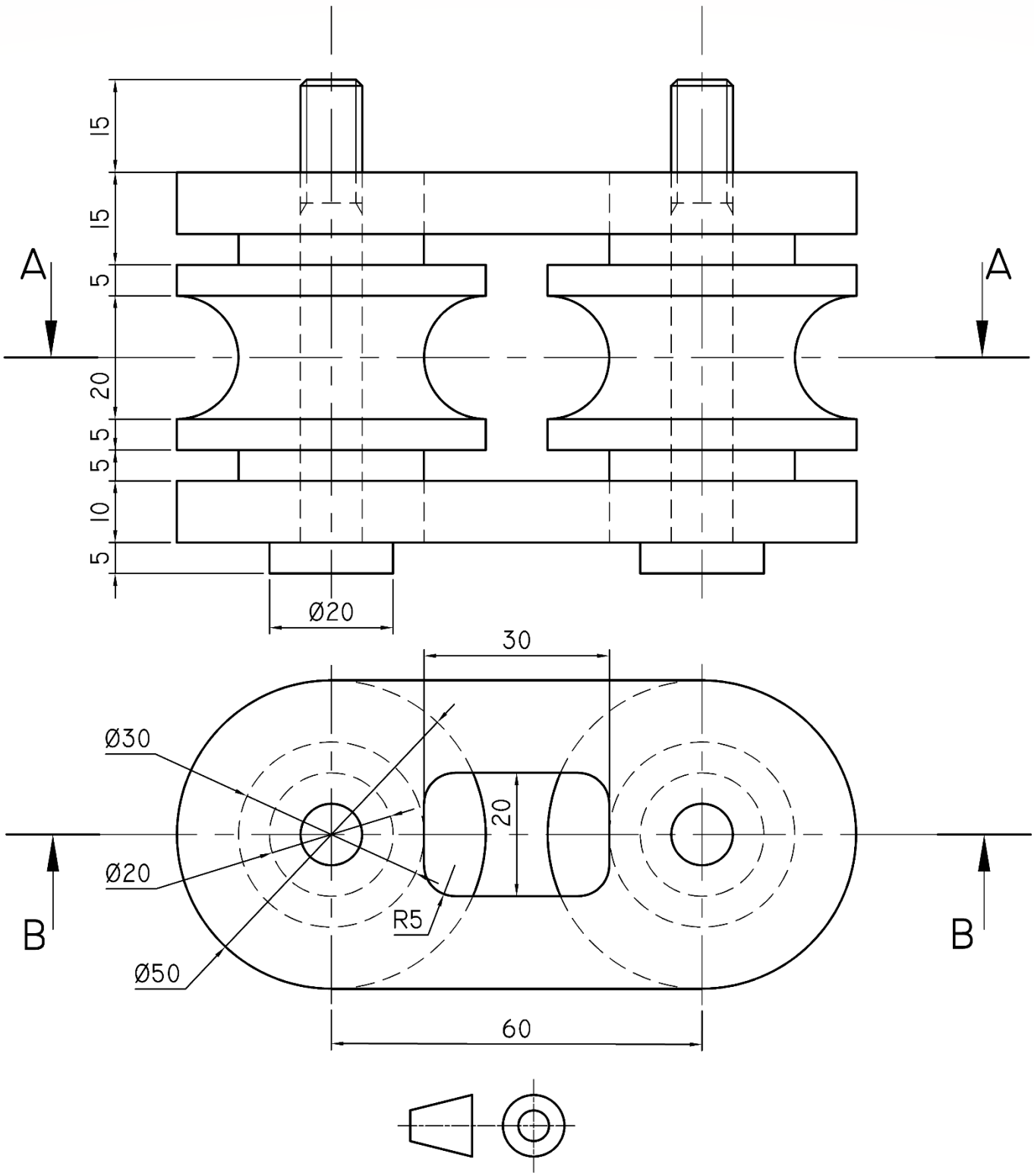

FIGURE 3 **[22]**

QUESTION 4: ISOMETRIC VIEW

FIGURE 4, (below) shows three views of a casting drawn in third-angle orthographic projection.

Draw, to scale 1:1, an isometric view of the casting. Do not redraw the given views.

Point P must be the lowest point.

No hidden detail is required.

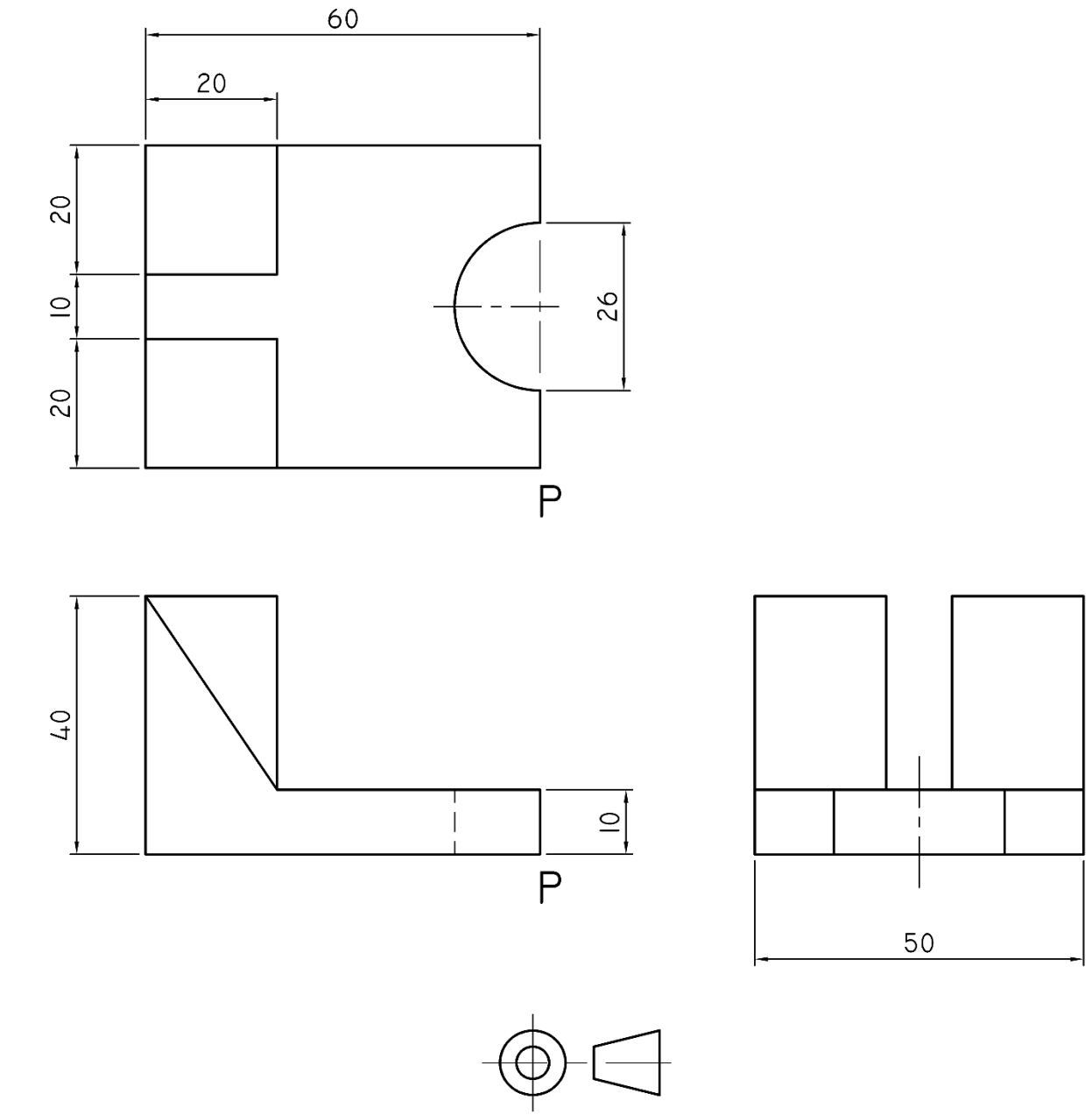

FIGURE 4

[14]

QUESTION 5: INTERPENETRATION

FIGURE 5 (below) shows two views of a T-end, in first-angle orthographic projection, without interpenetration lines.

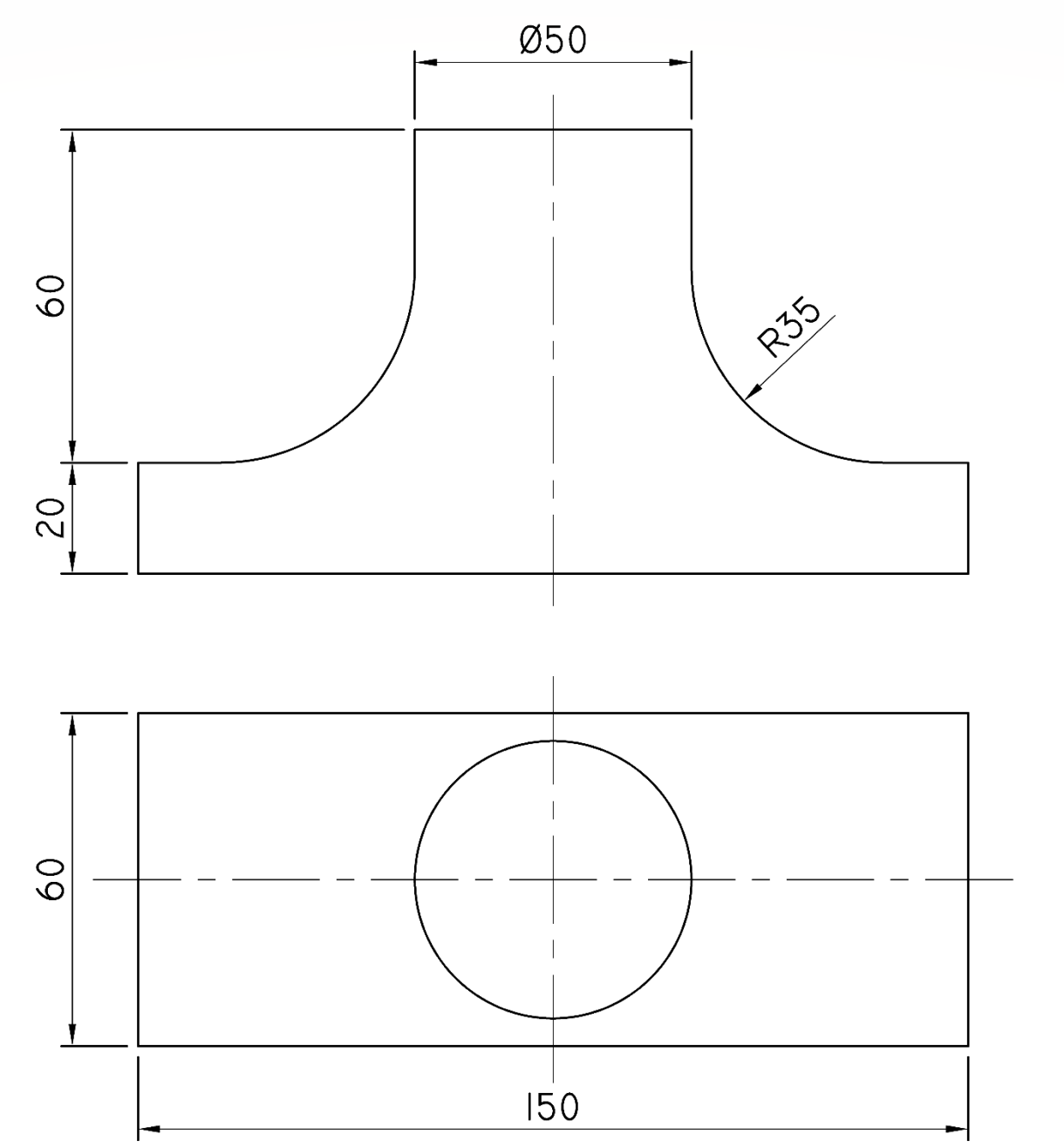

FIGURE 5

Redraw, to scale 1:1, the TWO given views and show the following:

5.1 The interpenetration curve on the front view

5.2 All construction lines needed to project the curve of interpenetration

[13]

Copyright reserved

QUESTION 6: THIRD-ANGLE ORTHOGRAPHIC PROJECTION AND MACHINING SYMBOLS

FIGURE 6 (on the next page) shows two views of an axle shaft connector in third angle orthographic projection.

6.1 Draw, to scale 1:1, the following views of the axle shaft connector in third-angle orthographic projection:

6.1.1 A full sectional front view (6)

6.1.2 An outside right view without hidden detail (4)

6.1.3 A sectional top view on cutting plane X-X (6)

6.2 Insert the third-angle orthographic projection symbol in a position below the title and scale (1)

6.3 At A, indicate that a surface texture with a roughness value of 25µm must be produced without the removal of material. (2)

6.4 Layout, neatness, linework and accuracy (6)

Copyright reserved

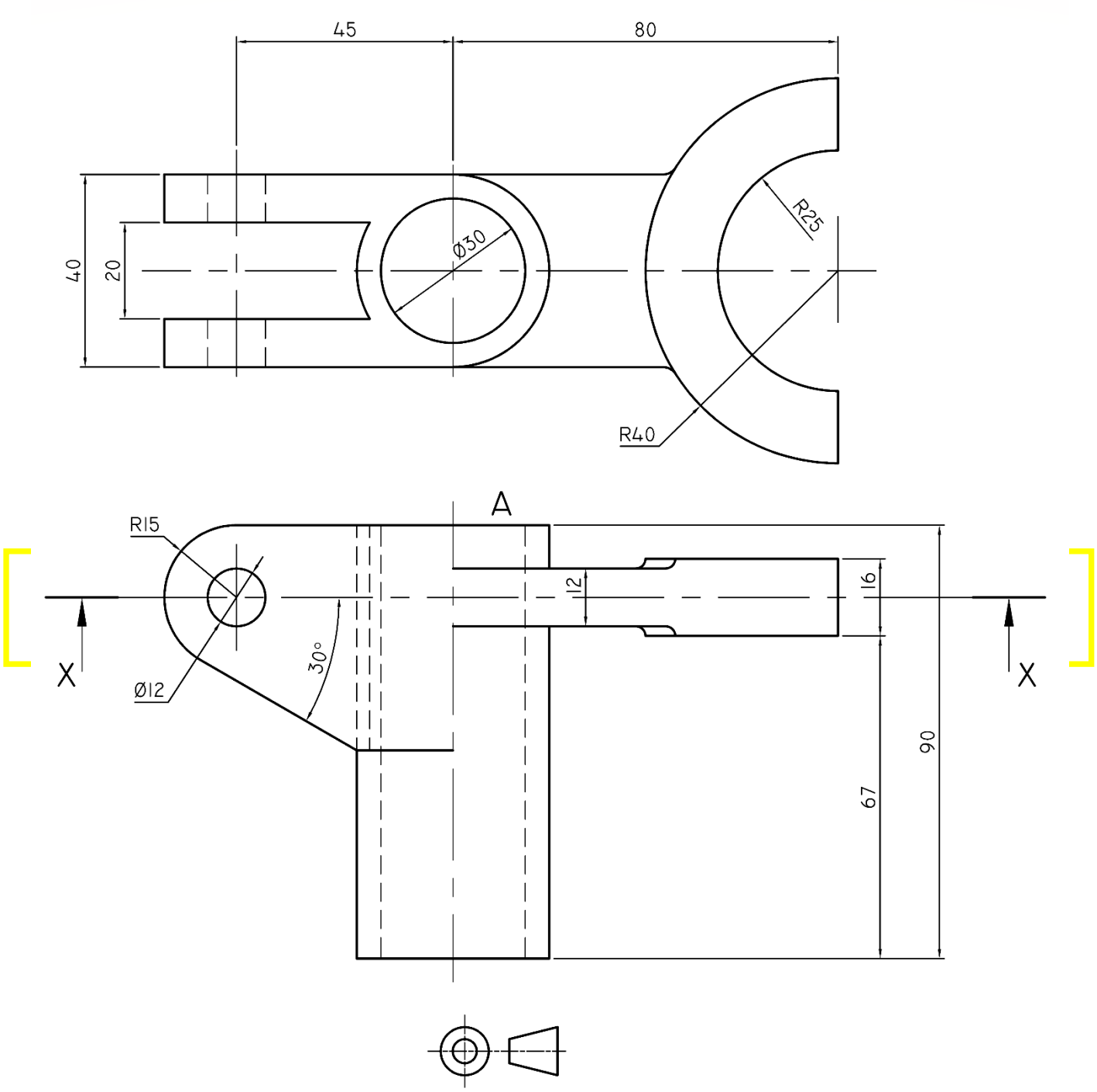

FIGURE 6 **[25]**

TOTAL: 100

Copyright reserved

ANSWER SHEET:

EXAMINATION NUMBER:													
CENTRE NUMBER:													

1.1 1.1.1 _____
1.1.2 _____
1.1.3 _____

(3 × 1) (3)

1.2 1.2.1 _____
1.2.2 _____

(Any 2 × 1) (2)

1.3

(5 × 1) (5)

1.4 1.4.1 _____
1.4.2(a) _____
1.4.2(b) _____
1.4.2(c) _____

(4 × 1) (4)
[14]

Copyright reserved