higher education & training

Department:
Higher Education and Training
REPUBLIC OF SOUTH AFRICA

MARKING GUIDELINE

NATIONAL CERTIFICATE

ENGINEERING DRAWING N2

12 August 2021

This marking guideline consists of 12 pages.

NOTE: MARKERS SHOULD PREPARE THEIR OWN TEMPLATES AS DRAWINGS AND SKETCHES IN THIS MARKING GUIDELINE ARE NOT TO SCALE.

Copyright reserved

QUESTION 1: FUNDAMENTALS OF ENGINEERING DRAWING, ELECTRICAL FITTINGS AND WELDING SYMBOLS

1.1 1.1.1 CHAMFER

1.1.2 ASSEMBLY

1.1.3 COUNTERSUNK HEAD

(3 x 1) (3)

1.2
- AutoCAD
- TurboCAD
- Solid Work
- Inventor

any other applicable software

(ANY 2 x 1) (2)

1.3

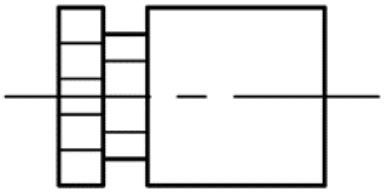

Correctness	3
Accuracy	1
Line work	1
TOTAL:	5

(5)

1.4 1.4.1 T-joint

1.4.2(a) Fillet weld

1.4.2(b) Weld all round

1.4.2(c) On site

(4)
[14]

MARKING CRITERIA FOR CORRECTNESS		**MARK ALLOCATION**
1.1	Abbreviations	3
1.2	CAD	2
1.3	Electrical Fitting	5
1.4	Welding Symbol	4
	TOTAL:	**14**

Copyright reserved

QUESTION 2: SCREW THREADS

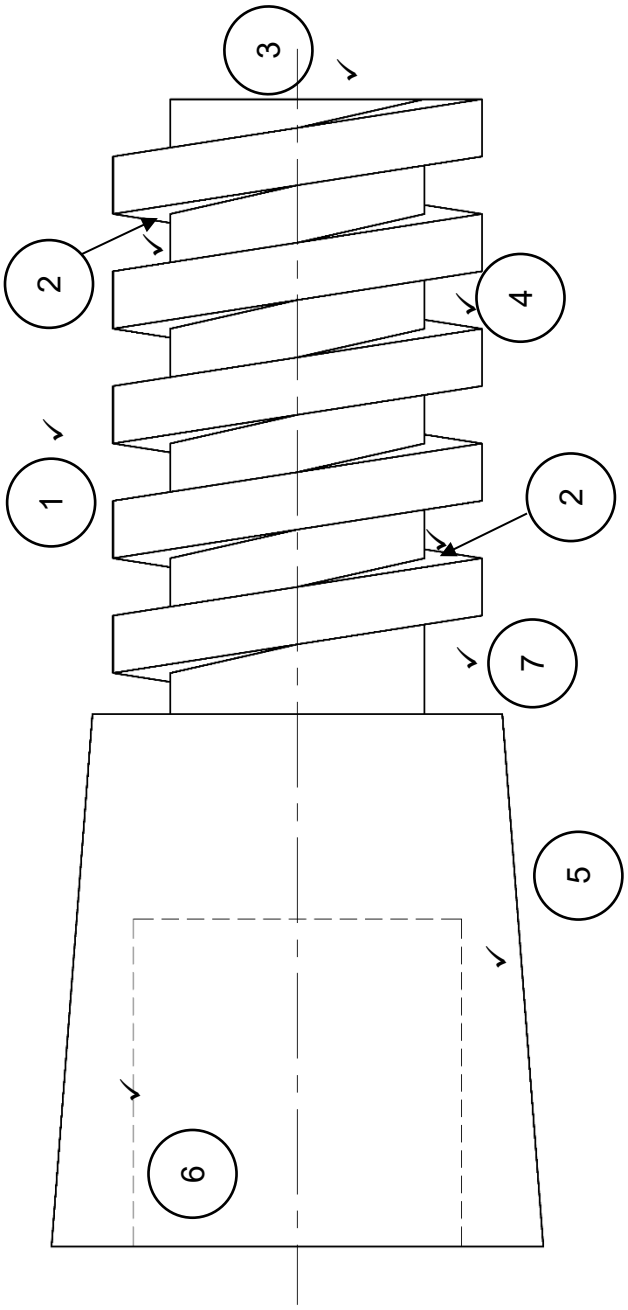

FIGURE 2

MARKING CRITERIA	
Correctness	8
Line work	2
Accuracy	1
Layout and neatness	1
TOTAL:	**12**

MARK ALLOCATION FOR CORRECTNESS

1	1	mark for the direction	1	mark
2	2	marks for the thread detail	2	marks
3	1	mark for start detail	1	mark
4	1	mark for the pitch	1	mark
5	1	mark for the taper flange	1	mark
6	1	mark for the square stud	1	mark
7	1	Mark for the undercut	1	mark
		TOTAL	**8**	**marks**

[12]

QUESTION 3: FIRST-ANGLE ORTHOGRAPHIC PROJECTION ~~AND MACHINE SYMBOLS~~

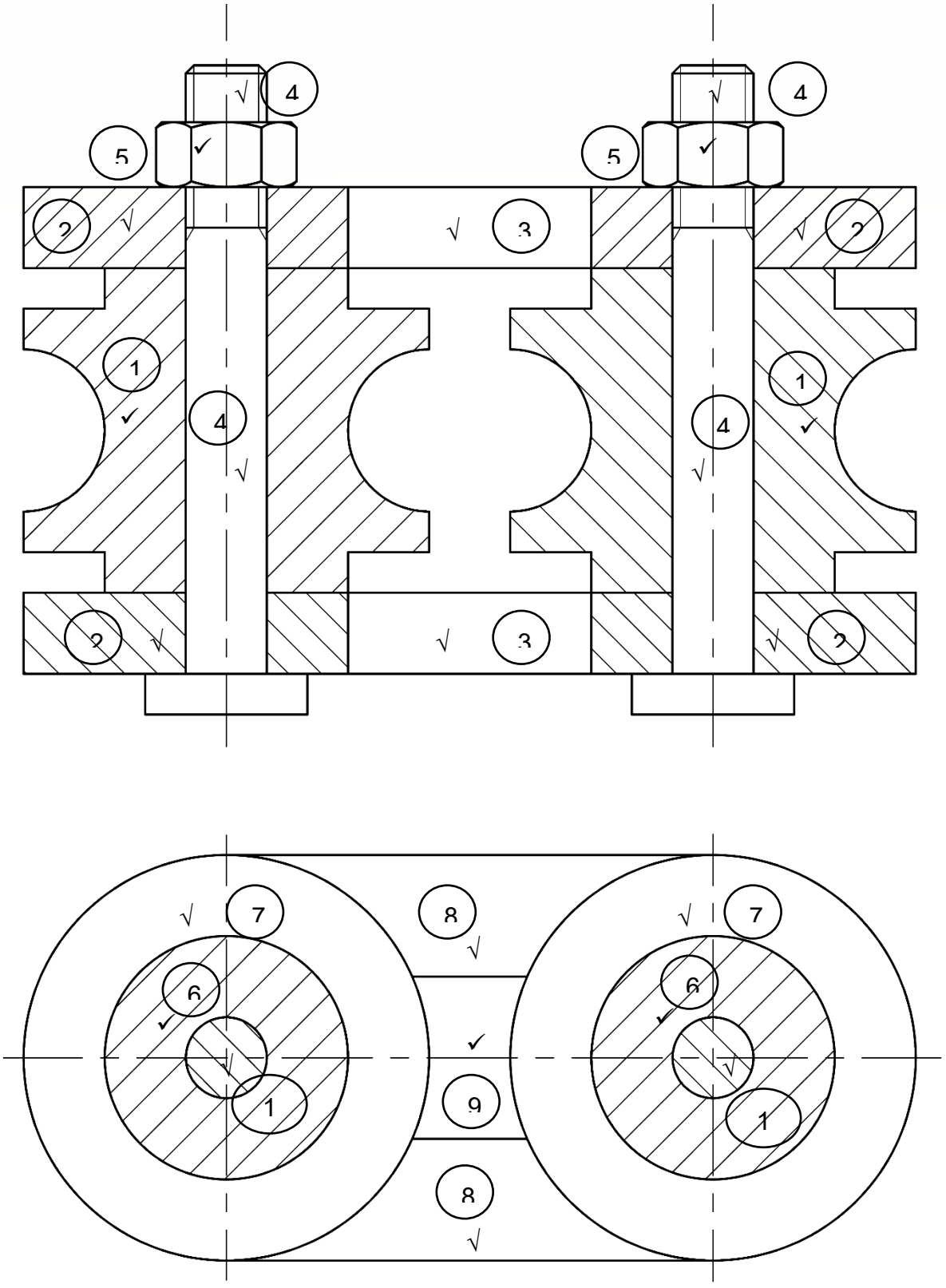

PULLEY COUPLING

SCALE 1:1

MARKING CRITERIA	
Correctness:	
FV	9
TV	6
Title and scale	2
Line work	2
Accuracy	2
Layout and neatness	1
TOTAL:	**22**

MARK ALLOCATION FOR CORRECTNESS

FV

1	2	marks for SECTIONING of pulleys	2	marks
2	2	marks for SECTIONING of plates	2	marks
3	1	mark for OPENING	1	mark
4	2	marks for bolts and thread (½ mark for bolt & ½ mark for thread x 2)	2	marks
5	2	marks for HEXAGONAL NUTS in correct position	2	marks
		TOTAL	**9**	**marks**

TV

6	2	marks for SECTIONING PULLEYS	2	marks
7	1	mark for NOT SECTIONING PULLEYS (½ mark each)	1	mark
8	1	mark for BACK PLATE (½ mark above and below slot)	1	mark
9	1	mark for SLOT	1	mark
10	1	mark for SECTIONING BOLTS (½ mark each)	1	mark
		TOTAL	**6**	**marks**

Copyright reserved

QUESTION 4: ISOMETRIC

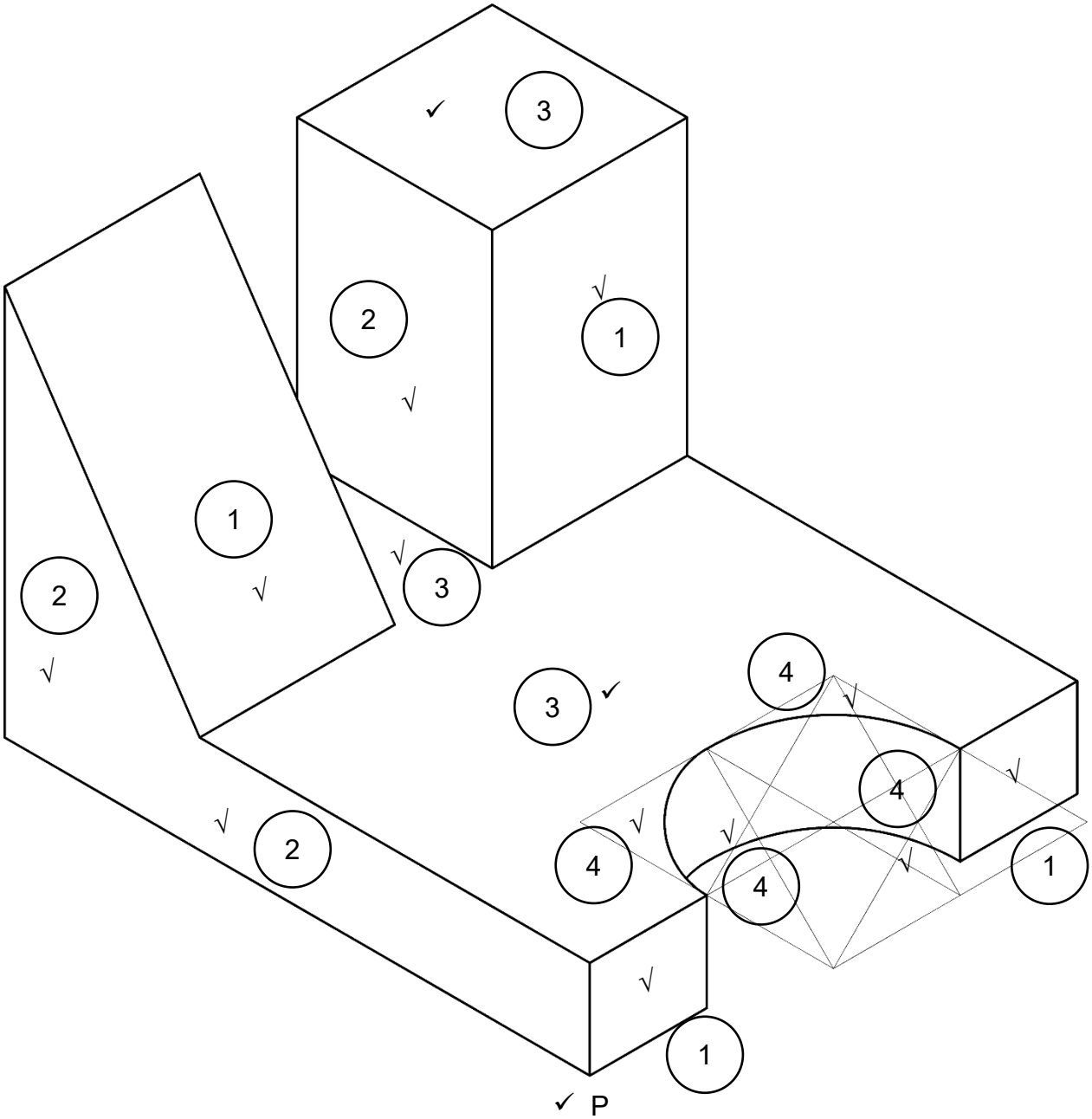

MARKING CRITERIA	
Correctness:	
Right Plane	2
Front Plane	1 ½
Top Plane	2 ½
Half Circle	2
Point P	1
Linework	2
Accuracy	2
Layout & Neatness	1
TOTAL:	**14**

MARK ALLOCATION FOR CORRECTNESS

1	2	marks for RIGHT PLANE	2	marks
2	1 ½	marks for FRONT PLANE	1 ½	marks
3	2 ½	marks for TOP PLANE	2 ½	marks
4	2	marks for HALF CIRCLE	2	marks
		TOTAL	**8**	**marks**

Copyright reserved

QUESTION 5: INTERPENETRATION

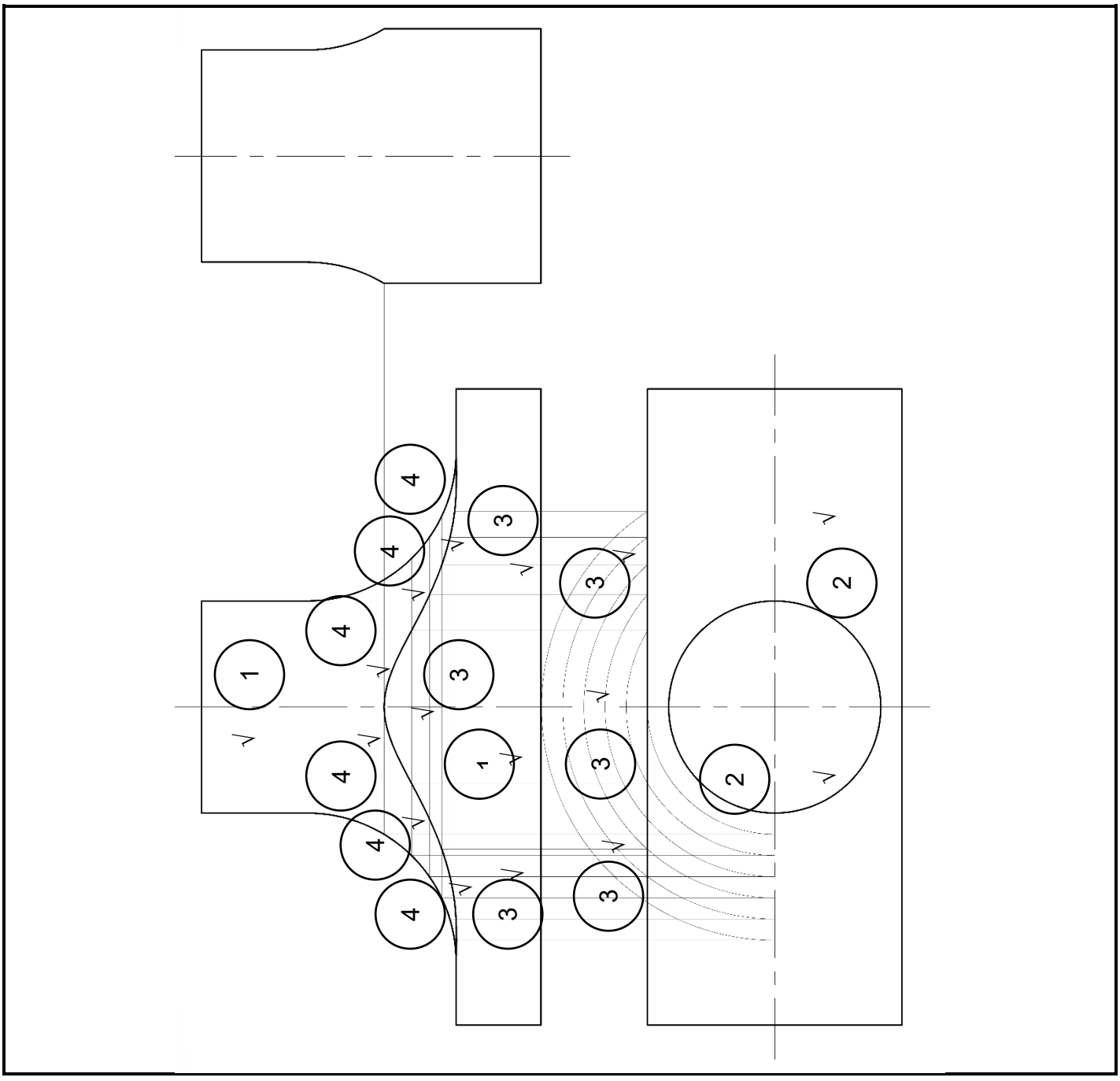

MARKING CRITERIA	
Correctness	2
Construction Lines	3
Interpenetration curve	3
Linework	2
Accuracy	2
Layout & Neatness	1
TOTAL:	**13**

Copyright reserved

MARK ALLOCATION FOR CORRECTNESS

1	1	mark for TOP VIEW	1	mark
2	1	mark for FRONT VIEW	1	mark
3	3	Marks for CONSTRUCTION LINES (needed to project the curve of interpenetration)	3	marks
4	3	Marks for INTERPENETRATION LINE	3	marks
		TOTAL	**8**	**marks**

Copyright reserved

QUESTION 6: THIRD-ANGLE ORTHOGRAPHIC PROJECTION

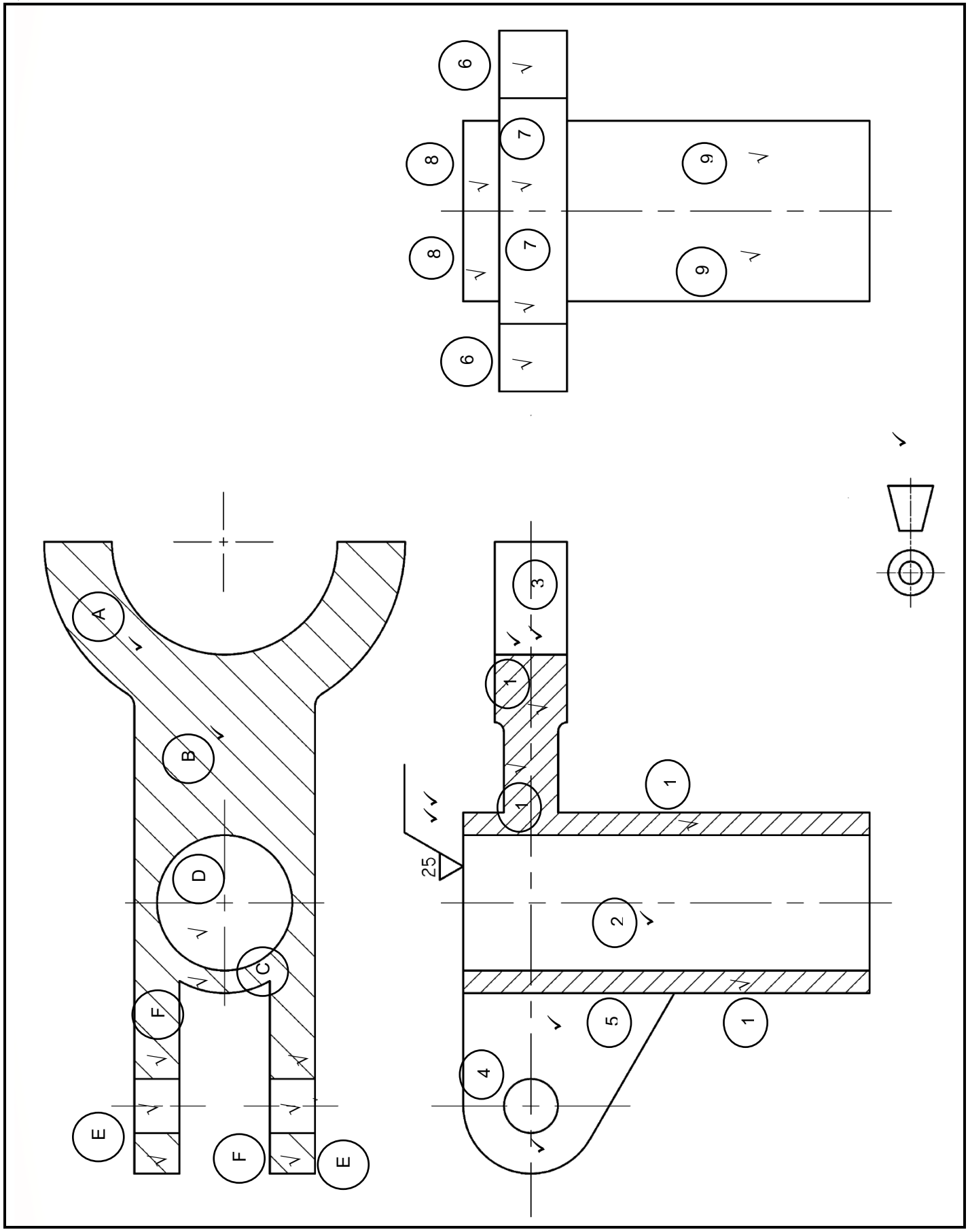

MARKING CRITERIA	
Correctness:	
FV	6
LV	4
TV	6
Projection symbol	1
Line work	3
Accuracy	2
Layout and neatness	1
Surface texture symbol	2
TOTAL:	**25**

MARK ALLOCATION FOR CORRECTNESS

FV

1	2	marks for SECTIONING	2	marks
2	1	mark for HOLE not sectioned	1	mark
3	1	mark for U GAP not sectioned	1	mark
4	1	mark for Ø12 hole not sectioned	1	mark
5	1	Mark for FORK end not sectioned	1	mark
		TOTAL	**6**	**marks**

LV

6	1	Mark for the U GAP ENDS (1/2 mark each)	1	mark
7	1	Marks for the U GAP (back part)	1	mark
8	1	Mark top piece of PIPE	1	mark
9	1	Mark bottom piece of PIPE	1	mark
		TOTAL	**4**	**mark**

TV

A	1	mark for U GAP sectioned	1	mark
B	1	Mark for SHOULDER sectioned	1	mark
C	½	mark for sectioned PIPE	½	mark
D	½	mark for Ø 30 HOLE	½	mark
E	1	mark for Ø12 HOLES not sectioned (½ mark each)	1	mark
F	2	marks for FORK ENDS sectioned (½ mark on either side of Ø12 hole)	2	marks
		TOTAL	**6**	**marks**

TOTAL: 100

Copyright reserved