higher education & training

Department:
Higher Education and Training
REPUBLIC OF SOUTH AFRICA

NATIONAL CERTIFICATE

ENGINEERING DRAWING N2

(8090272)

12 August 2019 (X-Paper)
09:00–13:00

REQUIREMENTS: ONE A2 Drawing sheet (BOE 8/20)
NO Answer book is to be given to candidates.

Calculators and drawing instruments may be used.

This question paper consists of 13 pages

Copyright reserved

TIME: 4 HOURS
MARKS: 100

INSTRUCTIONS AND INFORMATION

1. Answer ALL the questions.
2. Read ALL the questions carefully.
3. Number the answers according to the numbering system used in this question paper.
4. ALL drawings must be drawn neatly using drawing instruments, unless otherwise specified.
5. ALL drawings must conform to the latest SANS 10111 Code of Practice for Engineering Drawing
6. A 15 mm border must be drawn on both sides of the paper.
7. Unspecified radii must be R3.
8. Candidates may use only their own drawing instruments.
9. Only the candidate information on the drawing sheet must be done in ink. ALL other drawing work must be done in pencil.
10. Use BOTH sides of the drawing sheet.
11. A balanced layout is very important and candidates will be penalised for poor planning.

Copyright reserved

QUESTION 1: MACHINE SCREWS, COMPUTER-AIDED DRAUGHTING AND ELECTRICAL FITTINGS

TAKE NOTE: This question is to be answered directly onto the DRAWING SHEET and not a separate answer book.

1.1 Various options are given as possible answers to the following questions. Choose the correct answer and write only the letter (A–D) next to the question number (1.1.1–1.1.8) on the ANSWER SHEET.

1.1.1 The abbreviation A/F stands for:

A Assembled front.
B Across flats.
C Across fronts.
D Across formats.

1.1.2 Countersunk head is abbreviated as:

A CSUNK HEAD
B CSUNK HD
C CSK HD
D CSK HEAD

1.1.3 One disadvantage of an inkjet plotter is:

A Printing quality is very high.
B Printers are expensive and ink usage can be excessive.
C Special paper must be used that reacts with heat.
D Replacement pens are expensive.

1.1.4 The abbreviation CAD is short for:

A Computer aided draughting
B Countersunk all diameters
C Computer assisted drawing
D Computer assisted diagnosis

1.1.5 A drawing of a metal joint is shown below. What type of weld is indicated by the symbol?

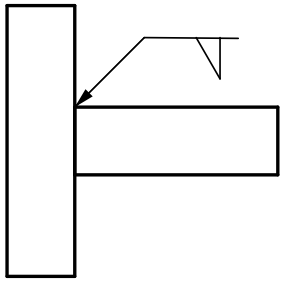

A Double V-Butt
B Square Butt
C Fillet
D Single V-butt

1.1.6 Which of the following sectional drawings correctly shows a counter-sunk threaded blind hole?

A

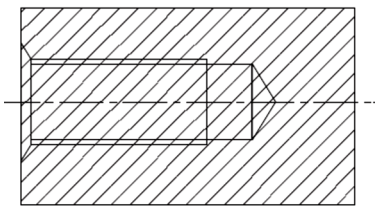

B

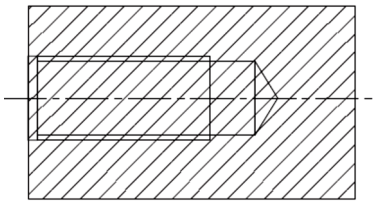

C

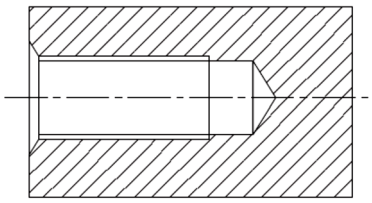

D

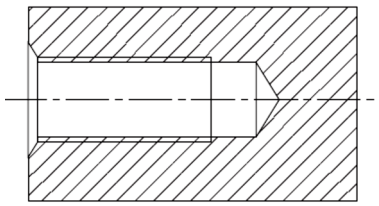

1.1.7 A drawing of a step block is shown below with dimensions being represented with symbols (A–D). Which of these dimensions is shown correctly?

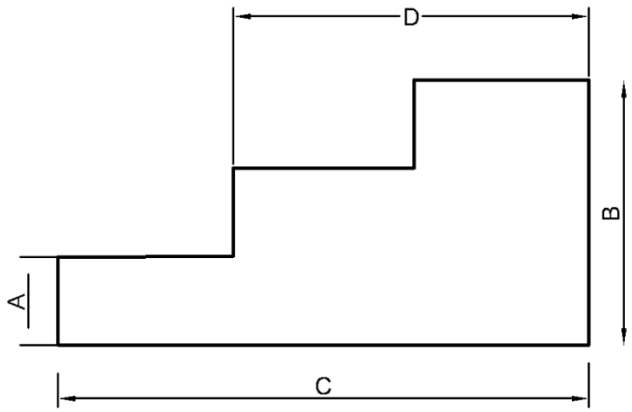

1.1.8 Which of the following orthographic symbols correctly indicates first-angle projection?

A 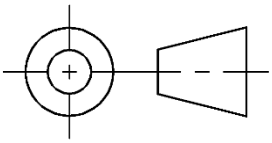

B 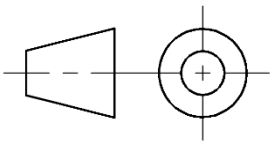

C 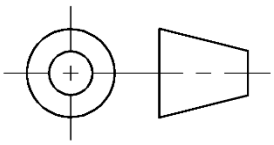

D 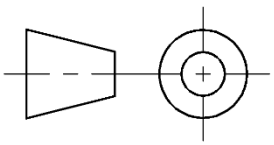

(8 × 1) (8)

1.2 Name TWO input devices for a computer. (2)

1.3 FIGURE 1 shows a view of a fastener in conventional representation.

1.3.1 Name the type of fastener given. (1)

1.3.2 Indicate what A–D represents on this fastener by writing only the answer next to the letter (A–D) on the ANSWER SHEET. (4)

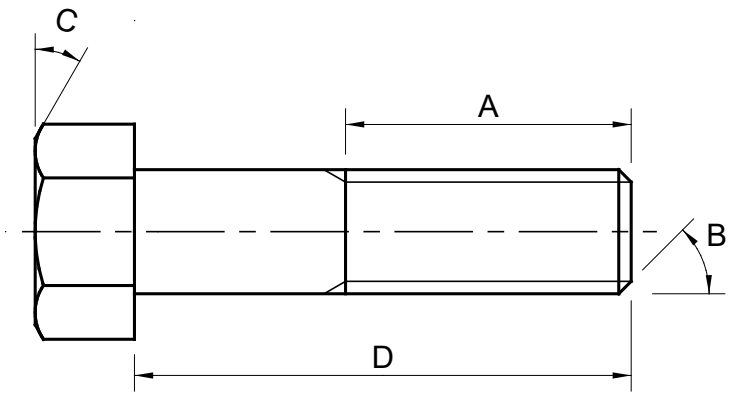

FIGURE 1

[15]

QUESTION 2: SCREW THREADS

FIGURE 2 below shows a front view in first angle orthographic projection of a square threaded spindle.

Draw the following views to scale 1:1:

2.1 The given view. Provide Part S with an external left-hand square screw thread with a pitch of 10 mm. (6)

2.2 The left view. (2)

Accuracy, Linework, Layout & Neatness (4)

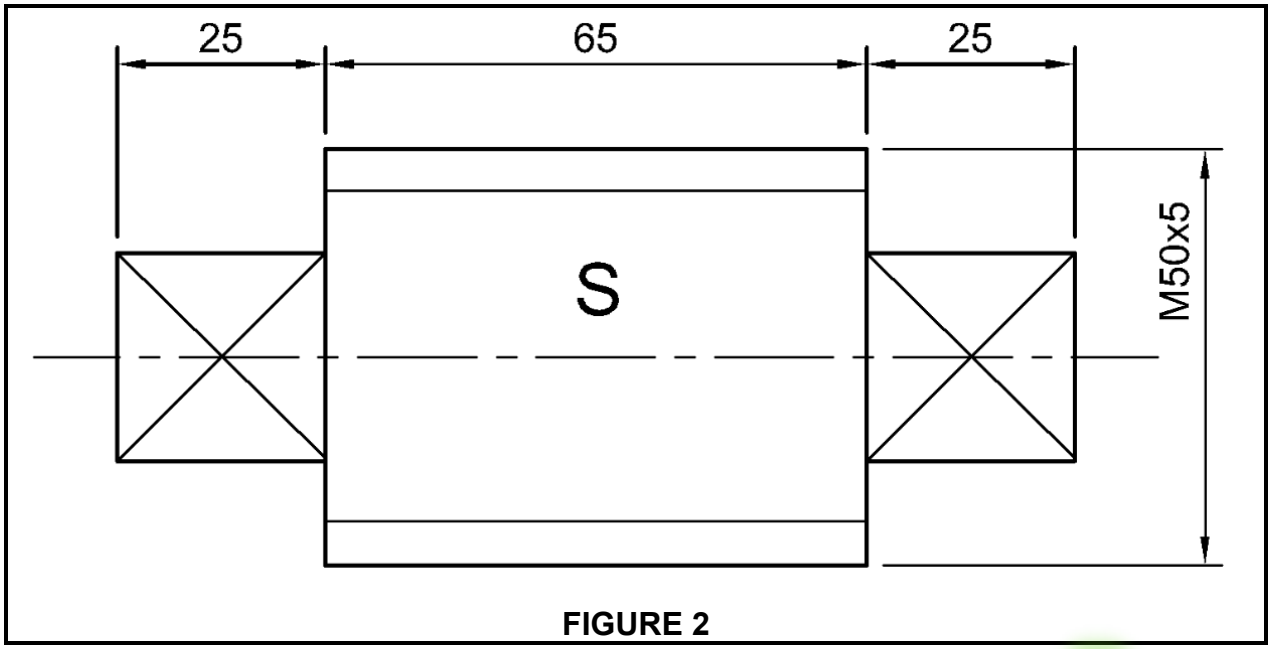

FIGURE 2

[12]

QUESTION 3: FIRST-ANGLE ORTHOGRAPHIC PROJECTION

FIGURE 3, on the next page shows TWO views of a support arm connector.

Draw to scale 1:1 and in first-angle orthographic projection, the following views of the support arm connector:

3.1 A full sectional front view. (8)

3.2 An outside top view, without hidden detail. (5)

3.3 Print the following title and scale centrally beneath the layout.

SUPPORT ARM
SCALE 1 : 1 (2)

3.4 Insert the first-angle orthographic projection symbol in a position below the title and scale (1)

Linework, Accuracy, Layout & Neatness (5)

Copyright reserved

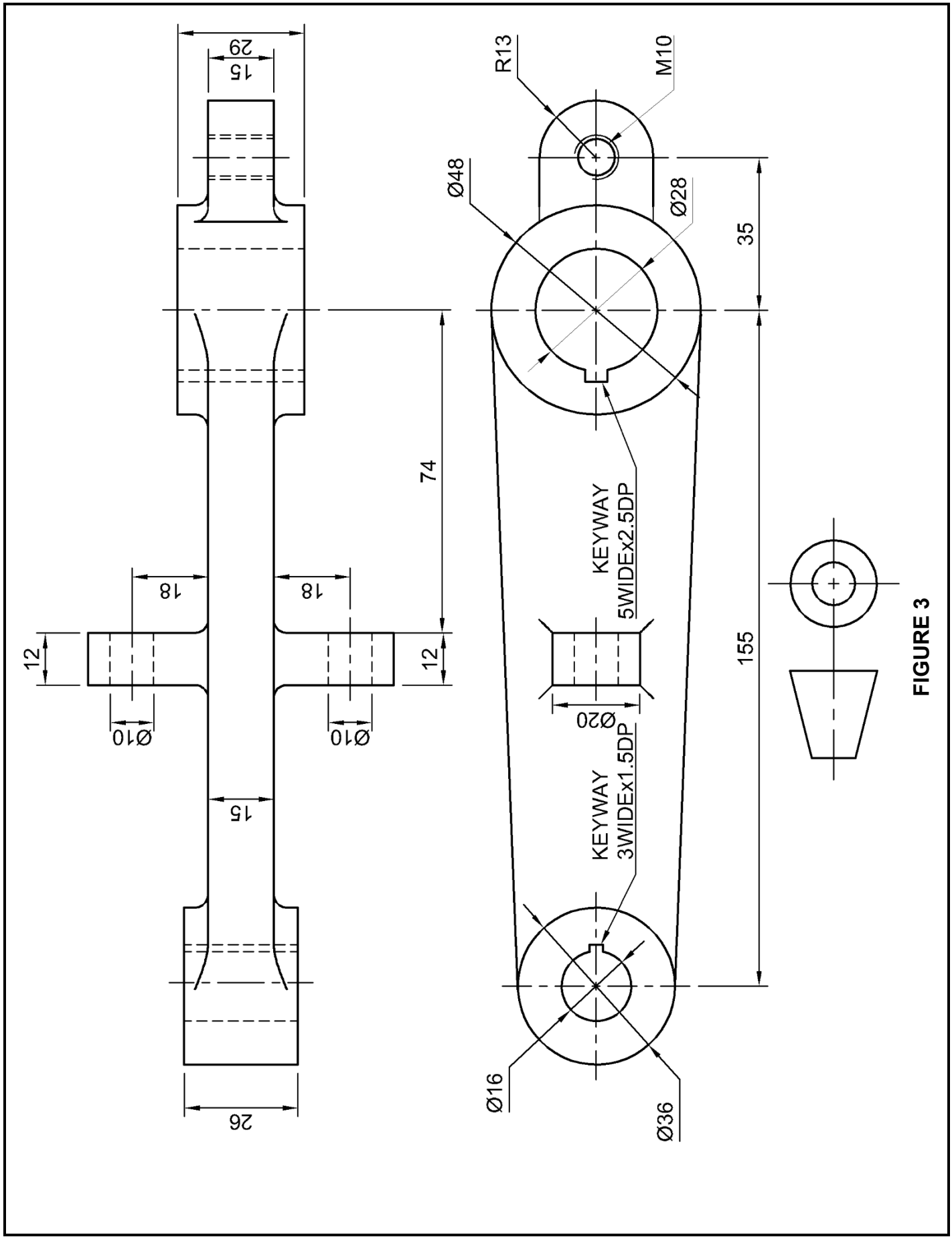
29
15
R13
M10
Ø48
Ø28
35
74
18
18
12
12
Ø10
Ø10
KEYWAY
5WIDEx2.5DP
155
Ø20
KEYWAY
3WIDEx1.5DP
15
26
Ø16
Ø36

FIGURE 3

[21]

QUESTION 4: ISOMETRIC

FIGURE 4 below shows two views of a casting drawn in third-angle orthographic projection.

Do NOT draw the two views given but draw to scale 1:1 an isometric view of the casting.
Point P must be the lowest point.
NO hidden detail required.

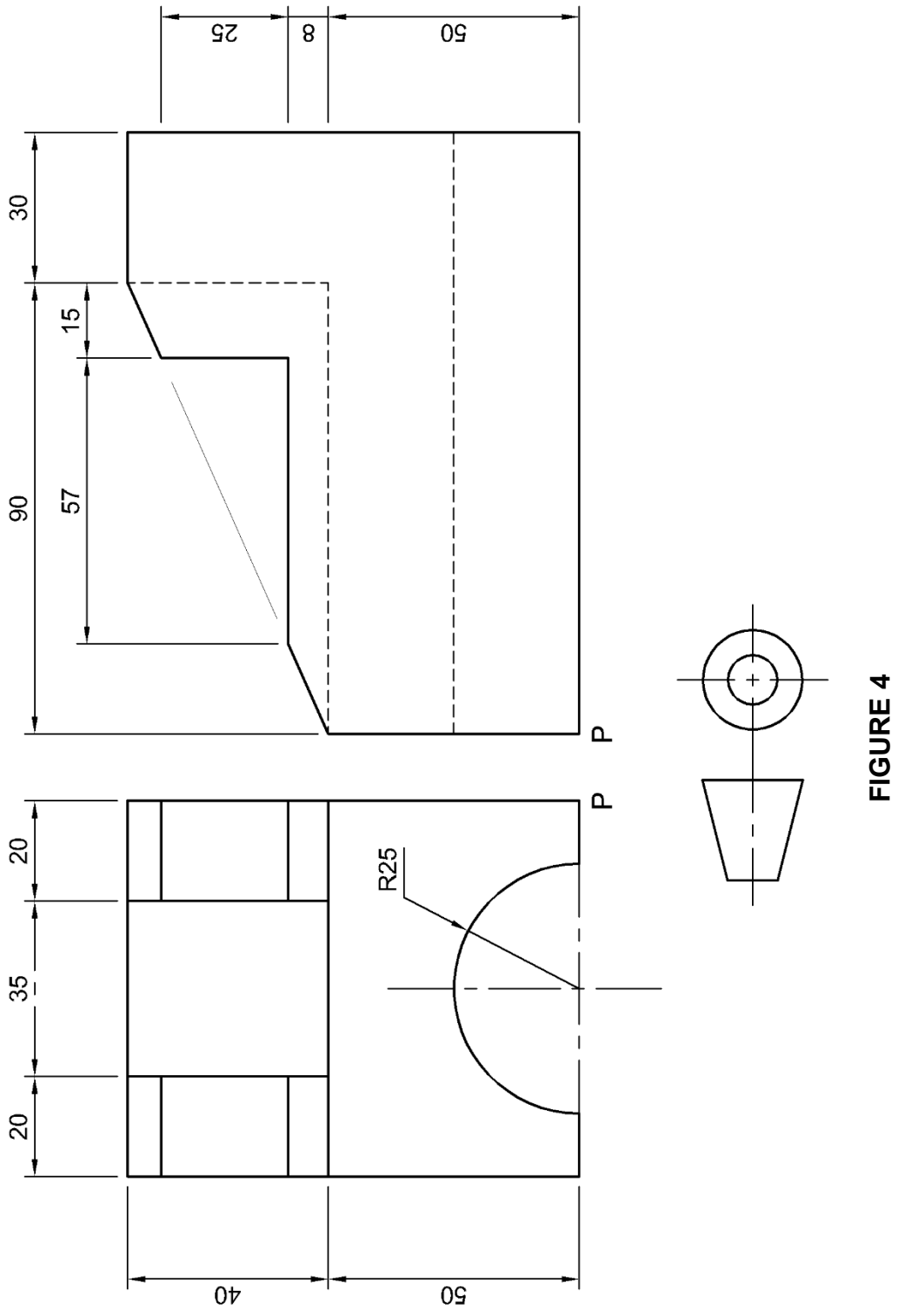

FIGURE 4

[14]

QUESTION 5: INTERPENETRATION

FIGURE 5 below shows two views in third angle orthographic projection of a T-end without the interpenetration lines.

Redraw the TWO given views to scale 1:1 and show the following:

5.1 The interpenetration curve on the front view

5.2 ALL construction lines needed to project the curve of interpenetration

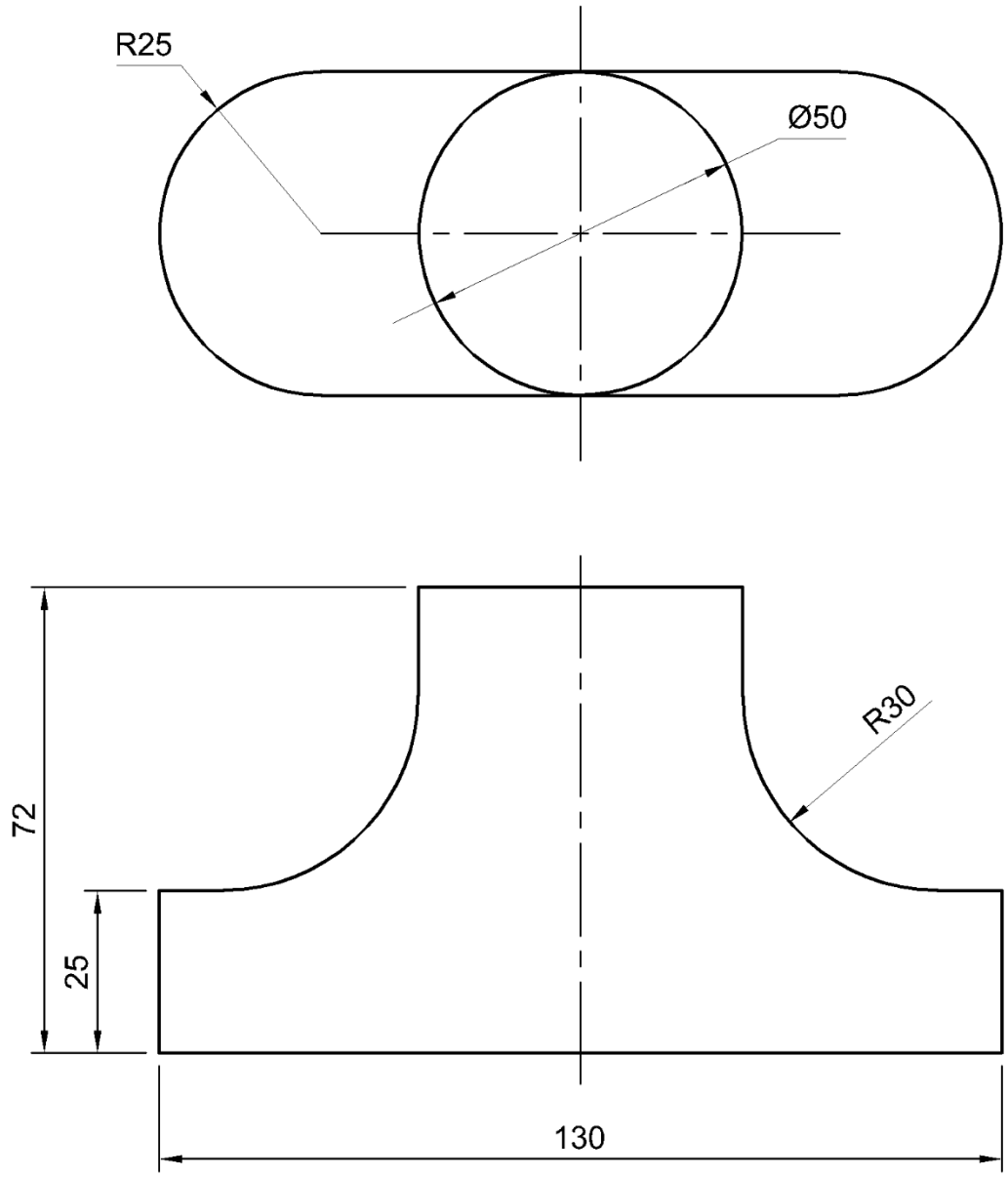

FIGURE 5

[13]

QUESTION 6: THIRD-ANGLE ORTHOGRAPHIC PROJECTION AND MACHINE SYMBOLS

FIGURE 6, on the next page shows a front, right view and top view of a sleeve and cotter joint in third-angle orthographic projection.

Draw to scale 1:1 and in third-angle orthographic projection the following views:

6.1 A full-sectional front view. (9)

6.2 An outside top view with NO hidden detail. (3)

6.3 Insert any FOUR dimensions. (2)

6.4 Print the following title and scale centrally beneath the layout.

SLEEVE AND COTTER JOINT
SCALE 1:1 (2)

6.5 Insert the third-angle orthographic projection symbol in a space beneath the layout (1)

6.6 Add a machining symbol with a roughness value of 6.4µm that must be produced by machining at A. (2)

Linework, Accuracy, Layout & Neatness (6)

Copyright reserved

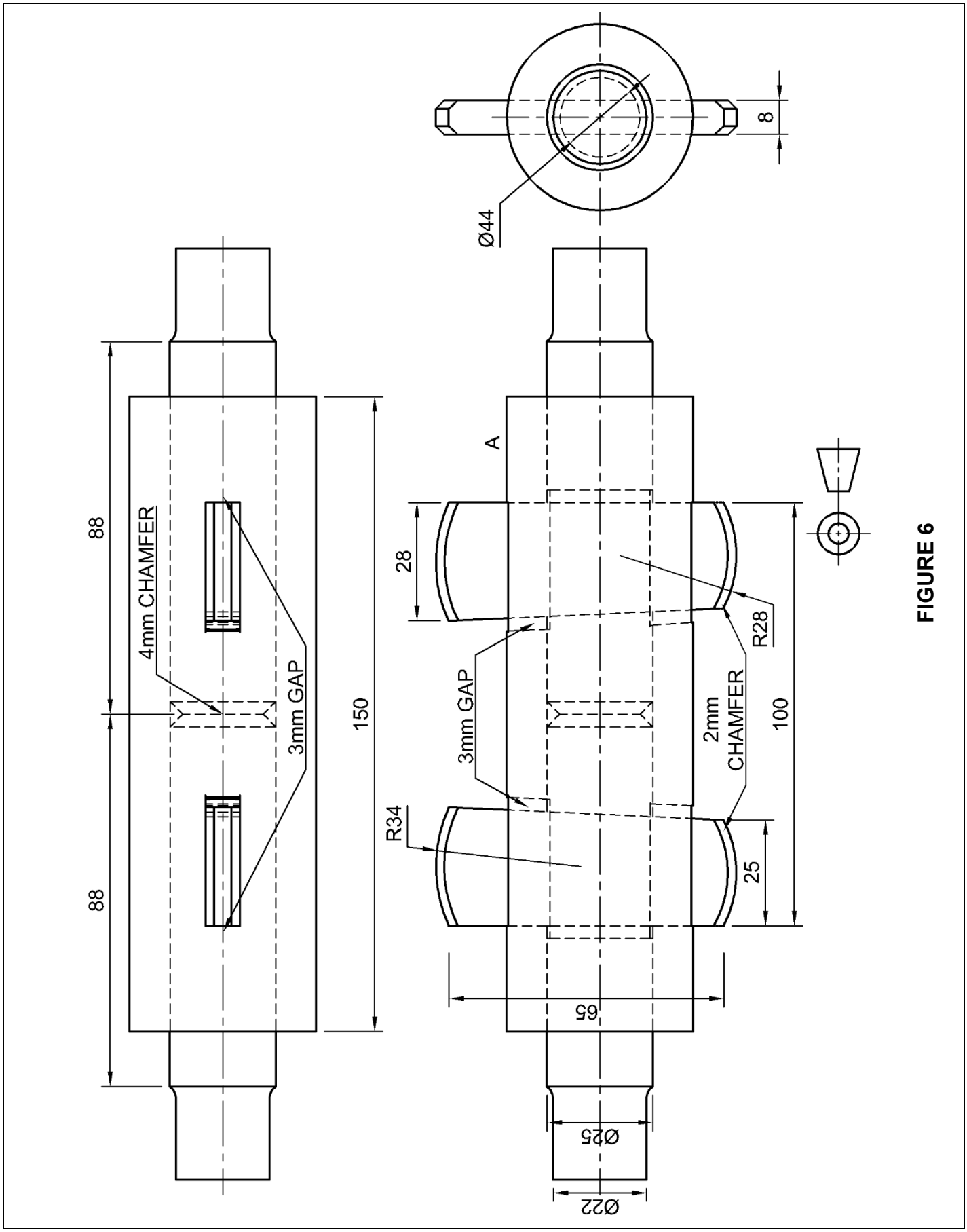

FIGURE 6

[25]

TOTAL: 100

Copyright reserved

Please turn over