higher education & training

Department:
Higher Education and Training
REPUBLIC OF SOUTH AFRICA

# MARKING GUIDELINE

## NATIONAL CERTIFICATE

## ENGINEERING DRAWING N2

## 12 AUGUST 2019

**This marking guideline consists of 12 pages.**

Copyright reserved

## INSTRUCTIONS TO MARKERS

√ = ½ mark
✓ = 1 mark

**NOTE:** Scanning and copying of drawings from AUTOCAD may affect the accuracy thereof.

Marking centre managers are urged to ensure that ALL markers prepare their own marking guidelines to mark candidates' work.

Copyright reserved 

## QUESTION 1: MACHINE SCREWS, COMPUTER-AIDED DRAUGHTING AND ELECTRICAL FITTINGS

1.1.1 B
1.1.2 C
1.1.3 B
1.1.4 A
1.1.5 C
1.1.6 D
1.1.7 C
1.1.8 B

(8)

1.2
- MOUSE
- KEYBOARD
- TABLET
- SCANNER

ANY 2 (1X2) (2)

1.3 1.3.1 HEXAGON HEAD BOLT (1)

1.3.2 A – THREAD LENGTH (1)
B – 45º CHAMFER (1)
C – 30º CHAMFER (1)
D – BOLT LENGTH (1)

**[15]**

| MARKING CRITERIA FOR CORRECTNESS | | MARK ALLOCATION |
|---|---|---|
| **1.1** | **SHORT QUESTIONS** | **8** |
| **1.2** | **FUNDAMENTALS OF ENG DRAWING** | **2** |
| **1.3** | **MACHINE SCREWS** | **5** |
| | **TOTAL:** | **15** |

Copyright reserved 

## QUESTION 2: SCREW THREADS

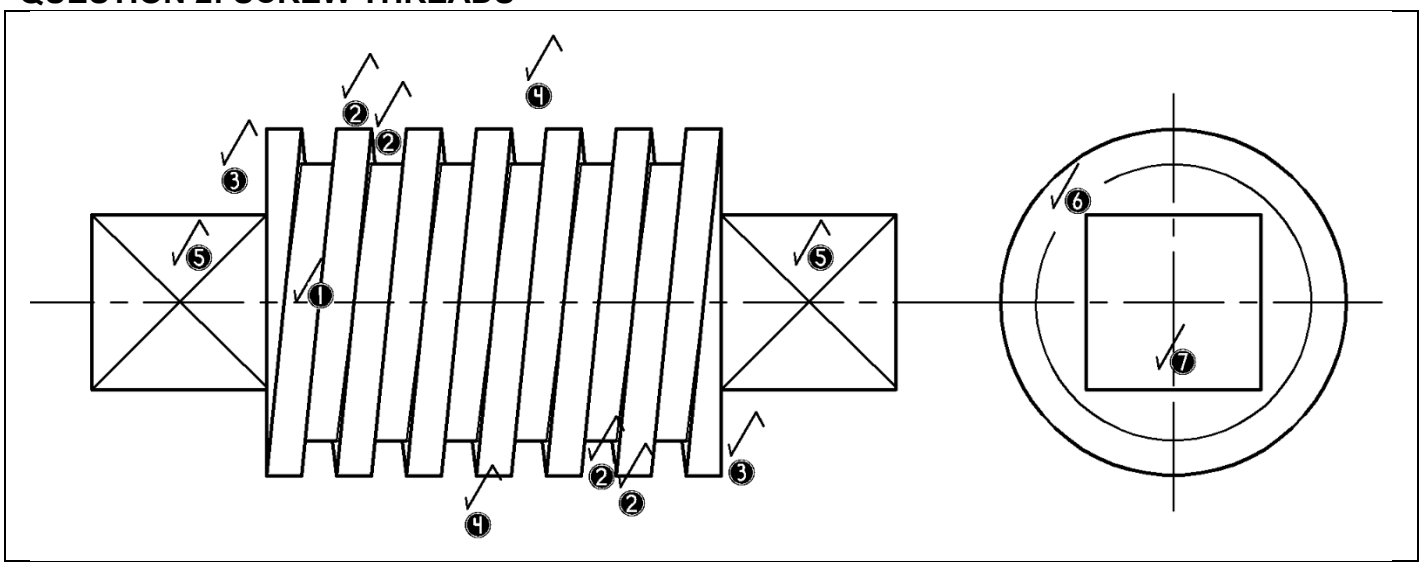


| MARKING CRITERIA | |
|---|---|
| CORRECTNESS | 8 |
| LINE WORK | 2 |
| ACCURACY | 1 |
| LAYOUT AND NEATNESS | 1 |
| **TOTAL:** | **12** |

### MARK ALLOCATION FOR CORRECTNESS – QUESTION 2

| | | |
|---|---|---|
| 1 | DIRECTION | 1 MARK |
| 2 | THREAD DETAIL | 2 MARKS |
| 3 | START AND END DETAIL | 1 MARK |
| 4 | PITCH | 1 MARK |
| 5 | SQUARE ON THE SHAFT | 1 MARK |
| 6 | LV THREAD | 1 MARK |
| 7 | LV SQUARE | 1 MARK |
| | **TOTAL** | **8 MARKS** |

Copyright reserved 

**QUESTION 3: FIRST-ANGLE ORTHOGRAPHIC PROJECTION**

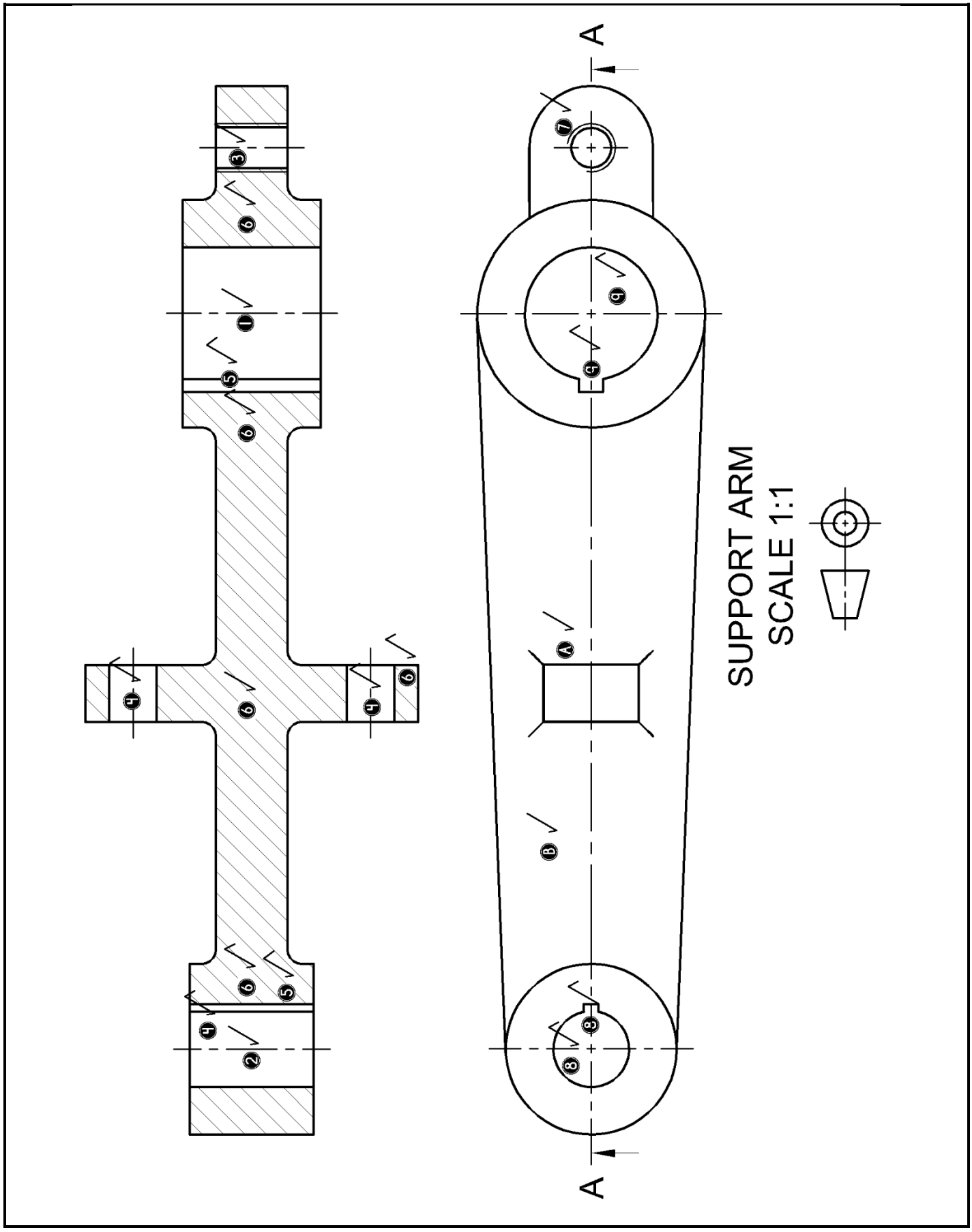

| MARKING CRITERIA | |
|---|---|
| CORRECTNESS: | |
| FS FV | 8 |
| TV | 5 |
| LINE WORK | 2 |
| ACCURACY | 2 |
| TITLE AND SCALE | 2 |
| PROJECTION SYMBOL | 1 |
| LAYOUT AND NEATNESS | 1 |
| **TOTAL:** | **21** |

## MARK ALLOCATION FOR CORRECTNESS – QUESTION 3

### FS FV

| | | |
|---|---|---|
| 1 | Ø28 HOLE | 1 MARK |
| 2 | Ø16 HOLE | 1 MARK |
| 3 | M10 THREADED HOLE | 1 MARK |
| 4 | Ø10 HOLES | 1 MARK |
| 5 | KEYWAY NOT SECTIONED | 1 MARKS |
| 6 | SECTIONING | 3 MARKS |
| | **TOTAL** | **8 MARKS** |

### TV

| | | |
|---|---|---|
| 7 | THREADED HOLE | 1 MARK |
| 8 | KEYWAY AND Ø16 | 1 MARK |
| 9 | KEYWAY AND Ø28 | 1 MARK |
| A | CONNECTOR ON THE ARM. | 1 MARK |
| B | ARM. | 1 MARK |
| | **TOTAL** | **5 MARKS** |

**[21]**

Copyright reserved 

## QUESTION 4: ISOMETRIC

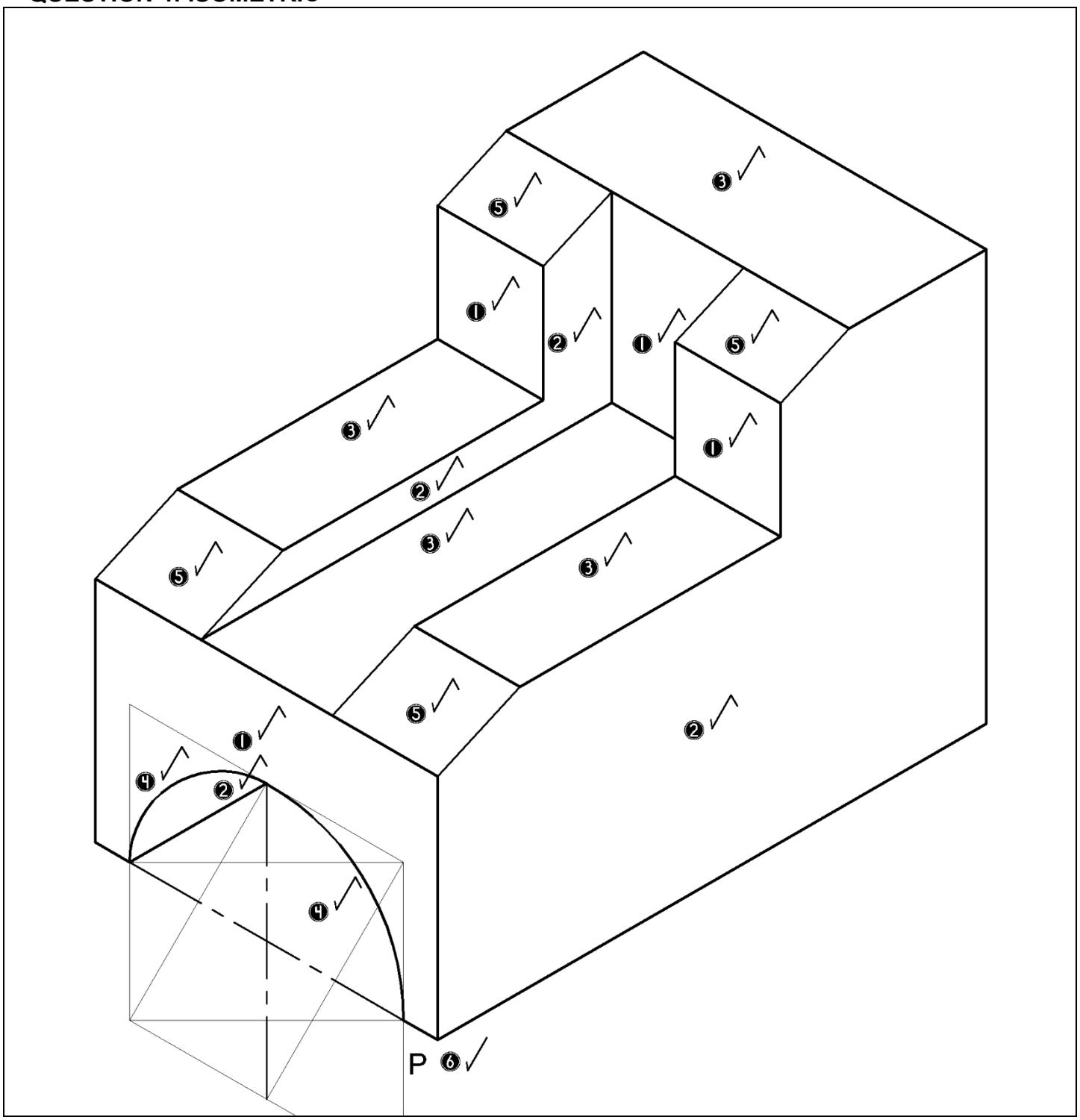


Copyright reserved

| MARKING CRITERIA | |
|---|---|
| CORRECTNESS | 9 |
| POINT P IN CORRECT POSITION | 1 |
| LINE WORK | 2 |
| ACCURACY | 1 |
| LAYOUT AND NEATNESS | 1 |
| **TOTAL:** | **14** |

## MARK ALLOCATION FOR CORRECTNESS – QUESTION 4

| | | | |
|---|---|---|---|
| 1 | LEFT PLANE | 2 | MARKS |
| 2 | FRONT PLANE | 2 | MARKS |
| 3 | TOP PLANE | 2 | MARKS |
| 4 | SEMI CIRCLE | 1 | MARK |
| 5 | ANGLE PLANE | 2 | MARKS |
| | POINT P IN CORRECT POSITION | 1 | MARK |
| | **TOTAL** | **10** | **MARKS** |

**[14]**

## QUESTION 5: INTERPENETRATION

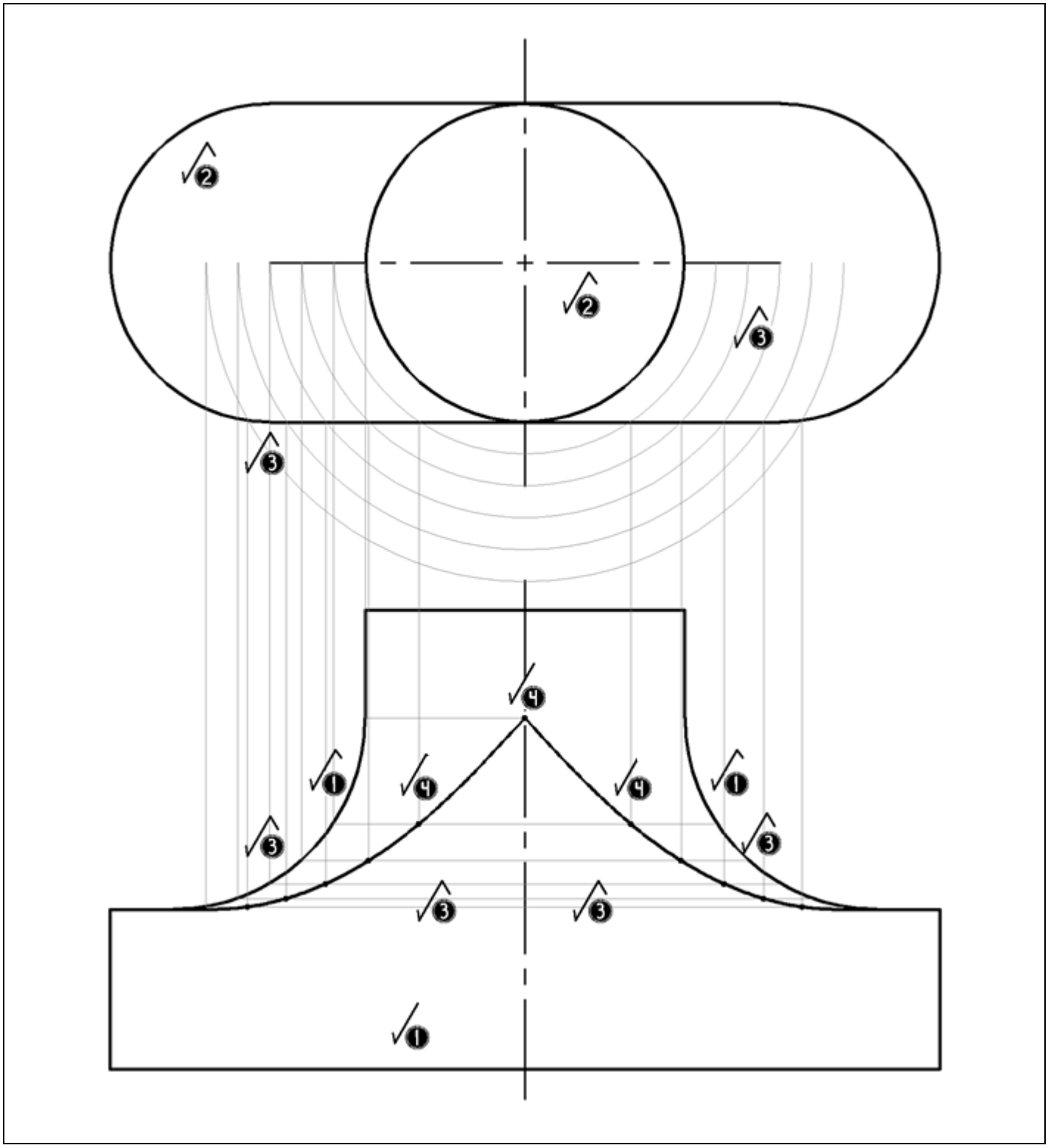

| MARKING CRITERIA | |
|---|---|
| CORRECTNESS: | |
| FV and TV | 3 |
| CONSTRUCTION LINES (TO PROJECT CURVE) | 3 |
| INTERPENETRATION CURVE | 3 |
| LINE WORK | 2 |
| ACCURACY | 1 |
| LAYOUT AND NEATNESS | 1 |
| **TOTAL:** | **13** |

**MARK ALLOCATION FOR CORRECTNESS – QUESTION 5**

| | | | |
|---|---|---|---|
| 1 | FRONT VIEW | 2 | MARKS |
| 2 | TOP VIEW | 1 | MARK |
| 3 | CONSTRUCTION LINES (TO PROJECT THE CURVE) | 3 | MARKS |
| 4 | INTERPENETRATION CURVES | 3 | MARKS |
| | **TOTAL** | **9** | **MARKS** |

**[13]**

**QUESTION 6: THIRD-ANGLE ORTHOGRAPHIC PROJECTION AND MACHINE SYMBOLS**

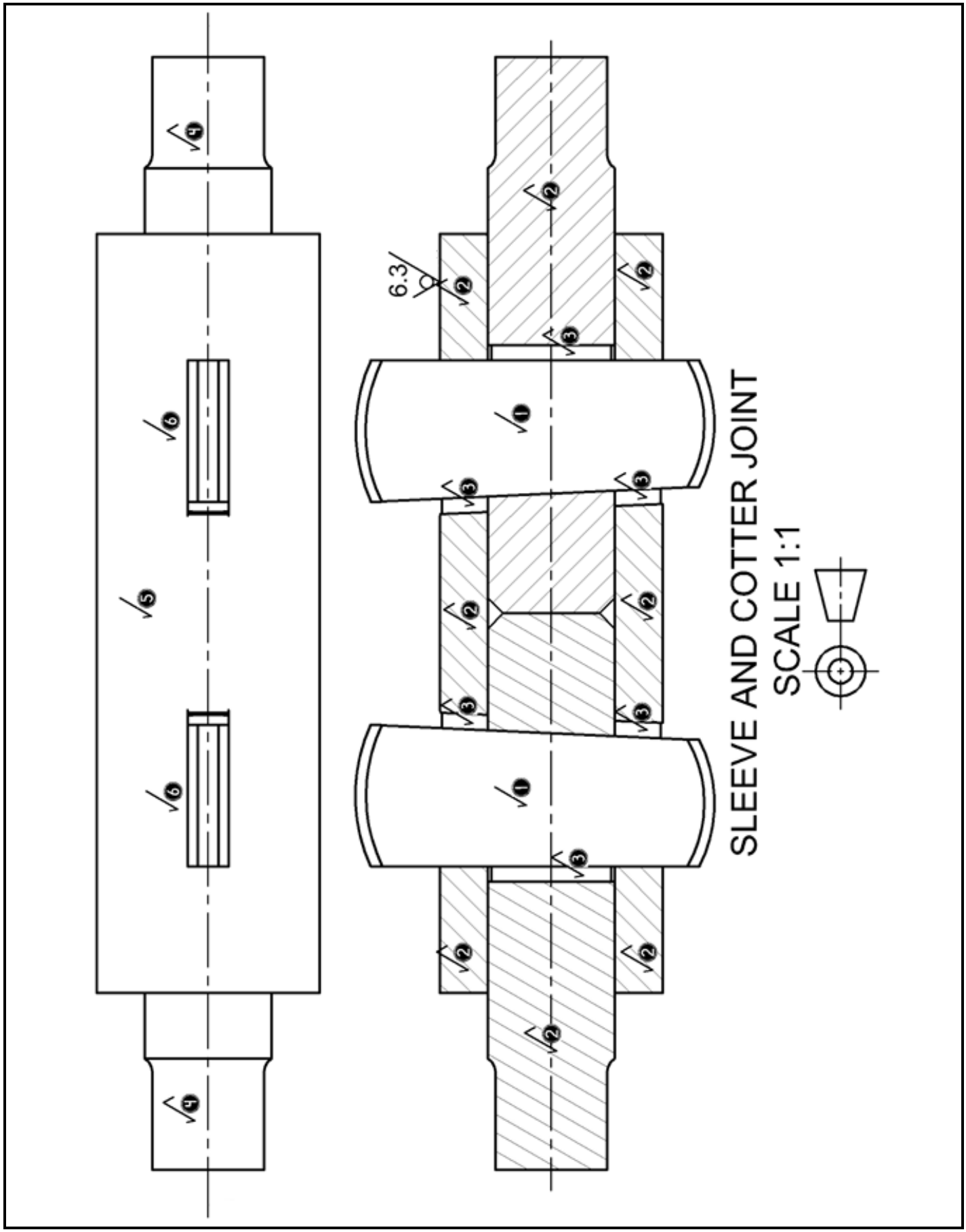

| MARKING CRITERIA | |
|---|---|
| CORRECTNESS: | |
| FV | 9 |
| TV | 3 |
| DIMENSIONS | 2 |
| TITLE & SCALE | 2 |
| PROJECTION SYMBOL | 1 |
| MACHINING SYMBOL | 2 |
| LINE WORK | 3 |
| ACCURACY | 2 |
| LAYOUT AND NEATNESS | 1 |
| **TOTAL:** | **25** |

**MARK ALLOCATION FOR CORRECTNESS – QUESTION 6**

**FS FV**

| | | |
|---|---|---|
| 1 | COTTERS (NO SECTIONING) | 2 MARKS |
| 2 | SECTIONING | 4 MARKS |
| 3 | GAPS | 3 MARKS |
| | **TOTAL** | **9 MARKS** |

**TV**

| | | |
|---|---|---|
| 4 | RODS | 1 MARK |
| 5 | SLEEVE | 1 MARK |
| 6 | COTTERS | 1 MARK |
| | **TOTAL** | **3 MARKS** |

**[25]**

**TOTAL: 100**

Copyright reserved