higher education & training

Department:
Higher Education and Training
REPUBLIC OF SOUTH AFRICA

T580**(E)**(J19)T

NATIONAL CERTIFICATE

ENGINEERING DRAWING N2

(8090272)

19 July 2018 (X-Paper)
09:00–13:00

REQUIREMENTS: ONE A2 drawing sheet

Calculators and drawing instruments may be used.

This question paper consists of 9 pages.

Copyright reserved

DEPARTMENT OF HIGHER EDUCATION AND TRAINING
REPUBLIC OF SOUTH AFRICA

NATIONAL CERTIFICATE
ENGINEERING DRAWING N2
TIME: 4 HOURS
MARKS: 100

INSTRUCTIONS AND INFORMATION

1. Answer ALL the questions.
2. Read ALL the questions carefully.
3. Number the answers according to the numbering system used in this question paper.
4. ALL drawings must be drawn neatly using drawing instruments, **unless otherwise specified**.
5. ALL drawings must conform to the latest SANS Codes of Practice.
6. A 15 mm border must be drawn on both sides of the paper.
7. Unspecified radii must be R3.
8. Candidates may use only their own drawing instruments.
9. Write neatly and legibly.
10. Only the candidate information on the drawing sheet must be done in ink. **ALL other drawing work must be done in pencil.**
11. Use BOTH sides of the drawing sheet.
12. A balanced layout is very important and candidates will be penalised for poor planning.

Copyright reserved

QUESTION 1: THREAD FASTENERS, WELDING PROCESSES AND DRAWING ABBREVIATIONS

TAKE NOTE: This question is to be answered directly onto the **DRAWING SHEET** and not a separate answer book

1.1 Name the types of welded joints shown in FIGURE 1. Write only the answer next to the question numbers (1.1.1 – 1.1.5) on the DRAWING SHEET.

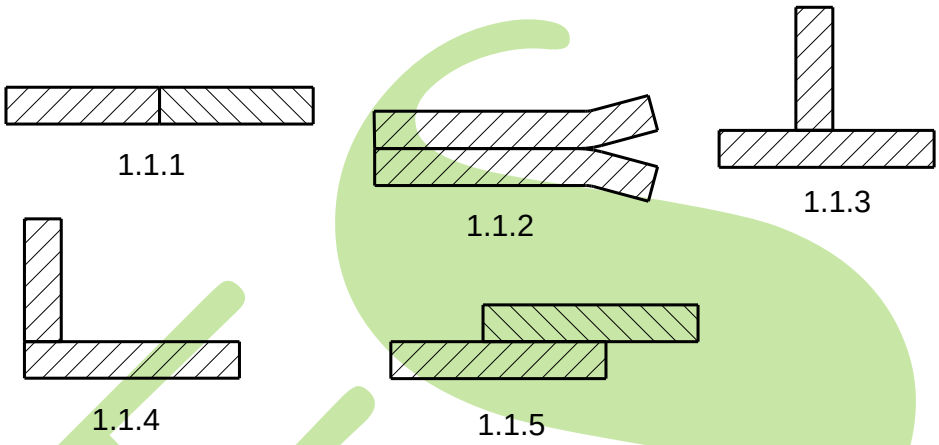

FIGURE 1 (5)

1.2 Name SIX locking devices used in the engineering industry. (6)

1.3 Figure 2 shows a drawing indicating a conventional bolt with lock nut and washer assembly. The labels 1.3.1 – 1.3.5 represent the proportions to be used on such an assembly. Write down the correct proportions next to the question numbers (1.3.1 – 1.3.5) of the given assembly on the DRAWING SHEET.

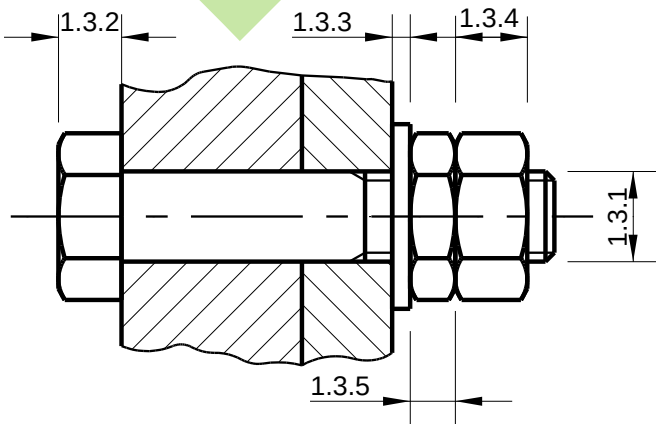

FIGURE 2

(5 × 1) (5)

[16]

QUESTION 2: SCREW THREADS

Draw, to scale 1 : 1, an M 46 × 6 mm pitch, single-start external right-hand V-thread with a length of 84 mm. Draw the thread in a horizontal position. **[10]**

QUESTION 3: FIRST-ANGLE ORTHOGRAPHIC PROJECTION

FIGURE 3, on the next page, shows, in first-angle orthographic projection, a front and top view of a knuckle joint from which the M 36 hexagonal securing nut has been omitted.

Draw, to scale 1 : 2 (half scale), the following views with the securing nut in position (where applicable) in first-angle orthographic projection:

3.1 A full-sectional front view on cutting plane A-A (9)

3.2 A half-sectional left view on cutting plane B-B with the top half in section (11)

3.3 Print the following title and scale centred beneath the layout:

KNUCKLE JOINT
SCALE 1 : 2 (2)

3.4 Draw the symbol for first-angle orthographic projection below the title and scale. (1)

Copyright reserved

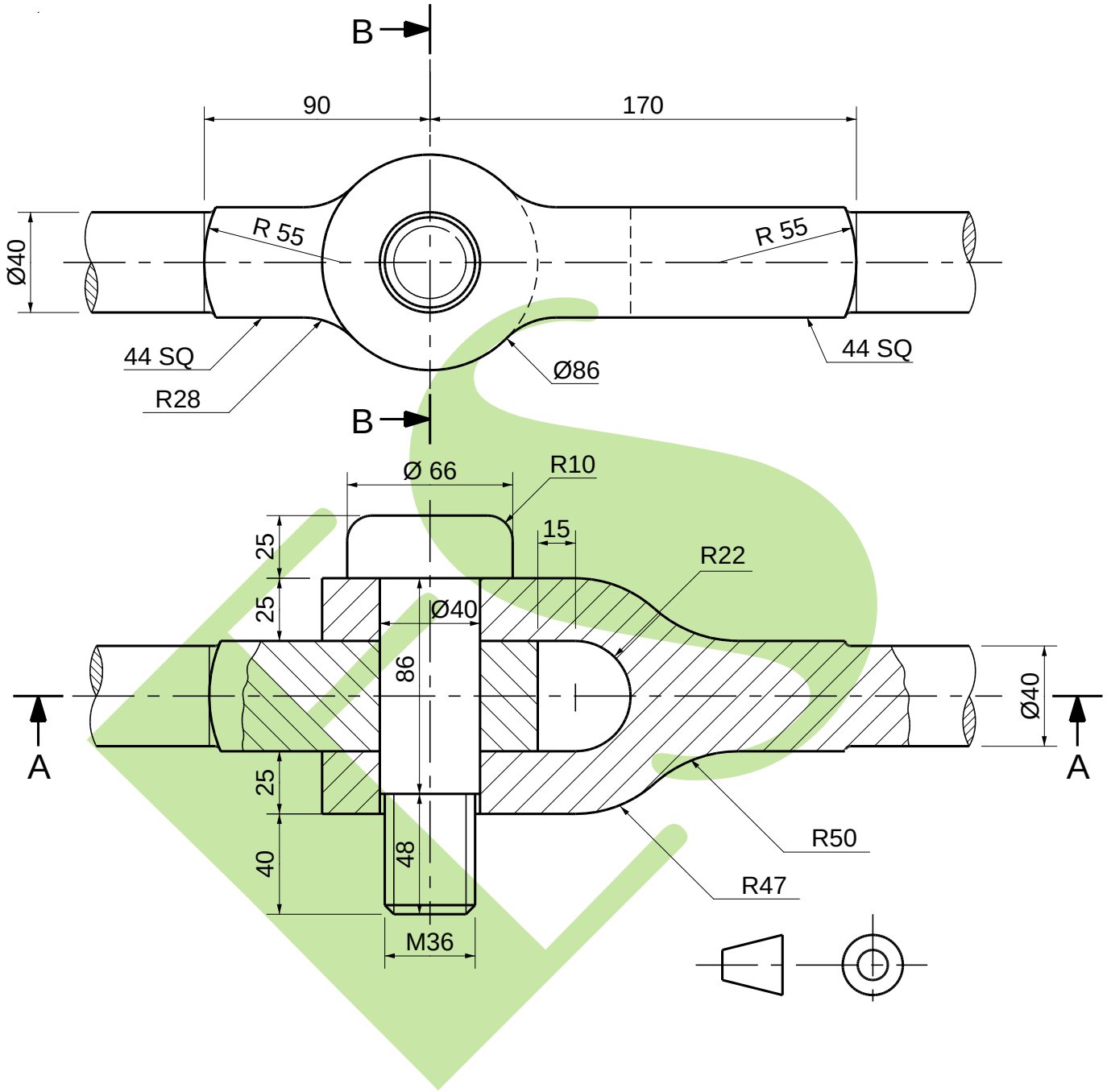

FIGURE 3 **[23]**

Copyright reserved

QUESTION 4: ISOMETRIC

FIGURE 4 shows TWO views of a machined casting.

Do NOT draw the given views but draw, to scale 1 : 1, an isometric view of the machined casting.

Point K must be the lowest point.

NO hidden detail is required.

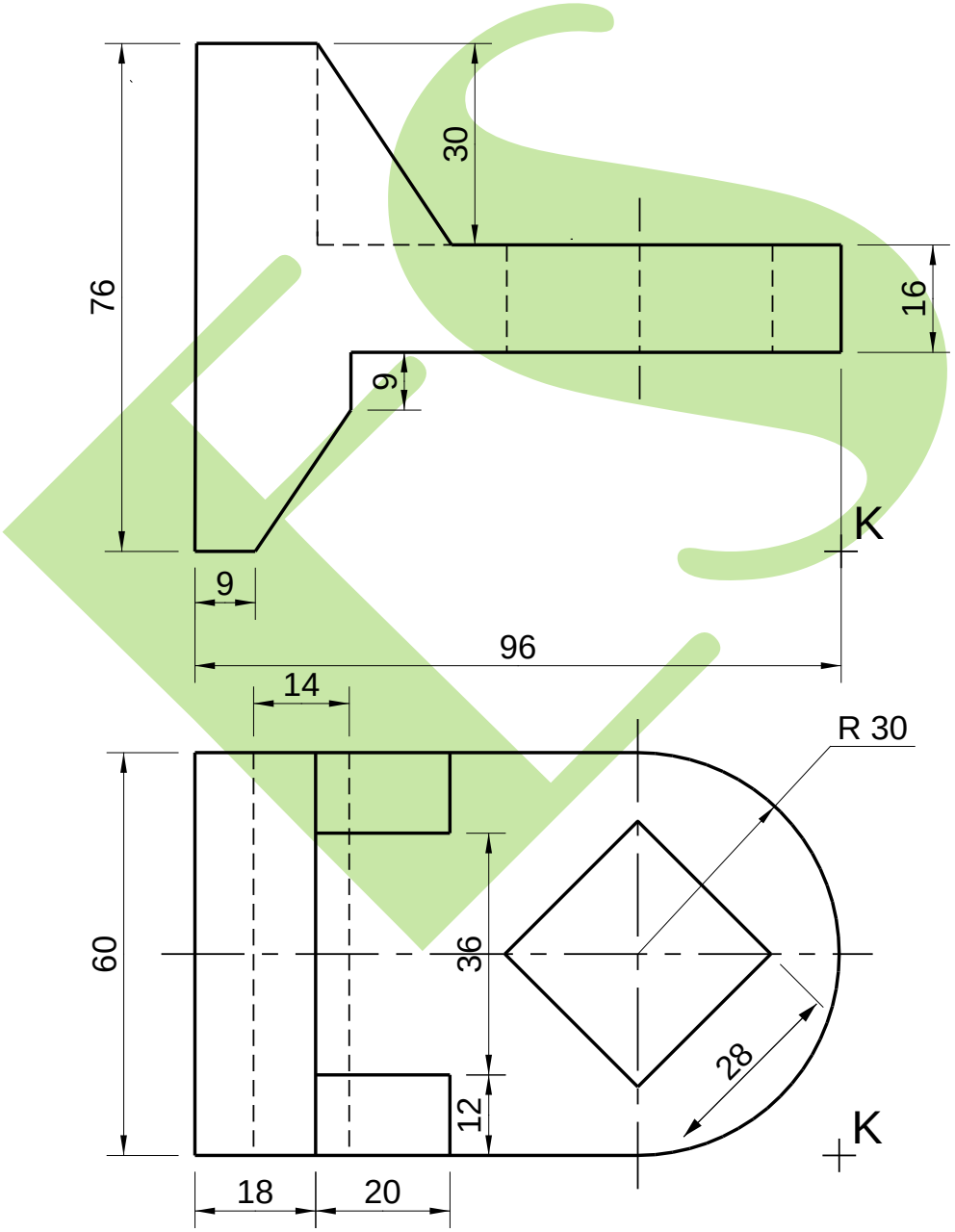

FIGURE 4 **[15]**

Copyright reserved

QUESTION 5: INTERPENETRATION

FIGURE 5 shows, in third-angle orthographic projection, an incomplete front and top view of a hexagon pipe penetrating a square pipe.

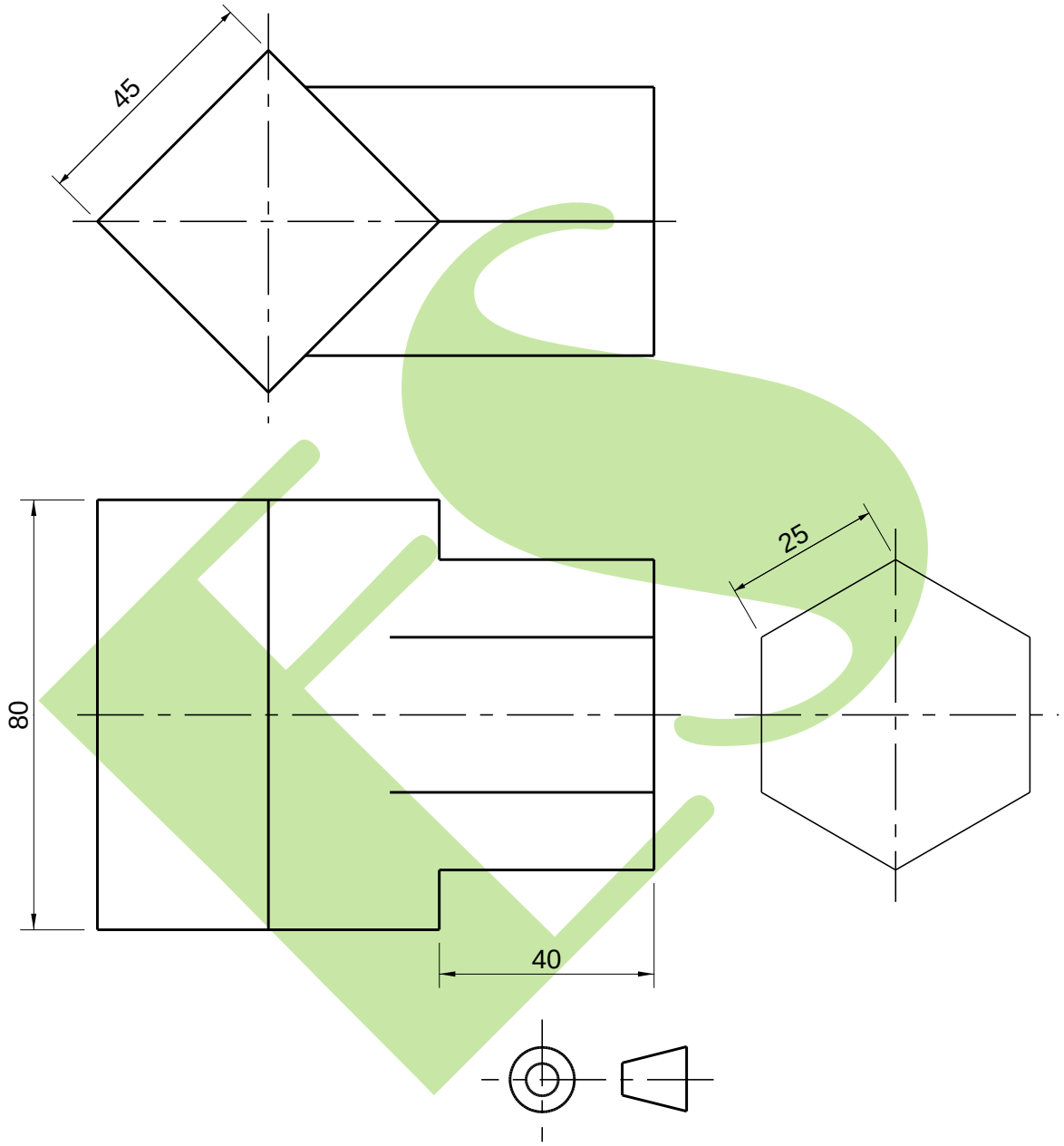

FIGURE 5

5.1 Draw, to scale 1 : 1, the TWO given views.

5.2 Complete the front view by plotting the curve of interpenetration.

5.3 All the construction lines needed to project the curve of interpenetration. **[12]**

QUESTION 6: THIRD-ANGLE ORTHOGRAPHIC PROJECTION AND MACHINE SYMBOLS

FIGURE 6, on the next page, shows TWO views of a machine casting.

Draw, to scale 1 : 1, the following views of the machine casting in third-angle orthographic projection:

6.1 A full-sectional front view on cutting plane A–A (6)

6.2 A half-sectional right view on cutting plane B–B, with the right-hand half in section. No hidden detail is to be shown on this view. (7)

6.3 An outside top view showing hidden detail (8)

6.4 Add the title and scale centred beneath the view. (2)

6.5 Draw the third-angle orthographic symbol below the title and scale. (1)

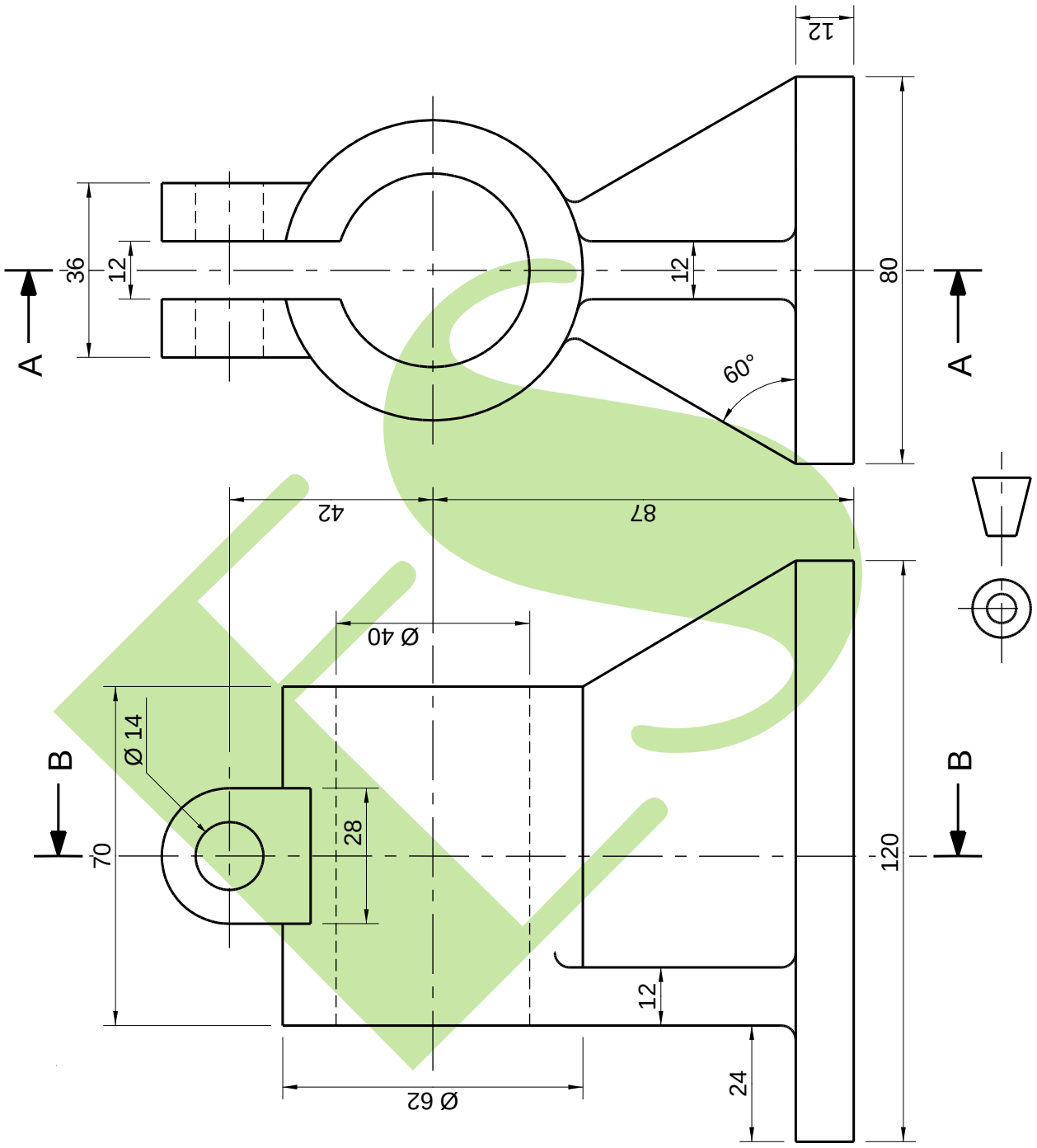

FIGURE 6

[24]

TOTAL: 100

Copyright reserved