higher education & training

Department:
Higher Education and Training
REPUBLIC OF SOUTH AFRICA

MARKING GUIDELINE

NATIONAL CERTIFICATE

ENGINEERING DRAWING N2

16 April 2020

This marking guideline consists of 11 pages.

Copyright reserved

INSTRUCTIONS TO MARKERS

√ = ½ mark and ✓ = 1 mark

NOTE: Scanning and copying of drawings from AUTOCAD may affect the accuracy thereof. Marking-centre managers must ensure that all markers prepare their own marking guidelines to mark candidates' work.

QUESTION 1: FUNDAMENTALS OF ENGINEERING DRAWING, MACHINE SYMBOLS AND WELDING

1.1
1.1.1 C
1.1.2 B
1.1.3 B
1.1.4 B
1.1.5 D
1.1.6 A
1.1.7 C
1.1.8 A

(8 × 1) (8)

1.2
- Use only a pencil and an eraser.
- Draw to good proportion (ratio).
- All line work must be neat, continuous and freehand.
- Draw horizontal lines from left to right.
- Draw centre lines first.

(Any 2 × 1) (2)

1.3

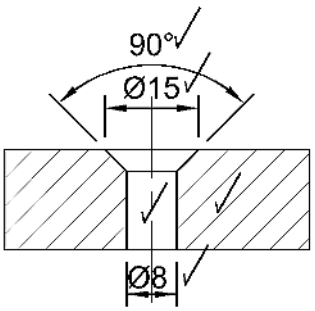

(2 for drawing + 2 for dimensions + 1 for angle) (5)

MARKING CRITERIA FOR CORRECTNESS		
1.1	Short questions	8
1.2	Fundamentals of Engineering Drawing	2
1.3	Fundamentals of Engineering Drawing	5
	TOTAL:	**15**

[15]

QUESTION 2: SCREW THREADS

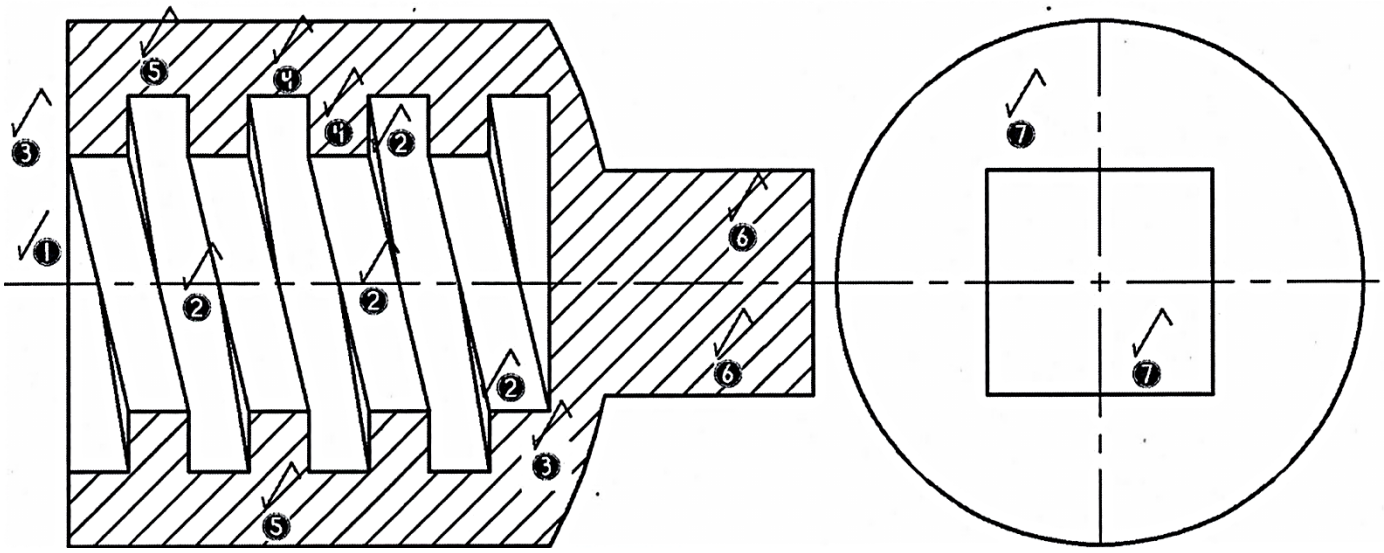

MARKING CRITERIA	
Correctness: FV	7
Correctness: RV	1
Line work	2
Accuracy	1
Layout and neatness	1
TOTAL:	**12**

MARK ALLOCATION FOR CORRECTNESS

1	Direction	1
2	Thread detail	2
3	Start and end detail	1
4	Pitch	1
5	Sectioning	1
6	SQ30 of cap (full sectioned/part sectioned)	1
7	RV - Outside Ø70 and SQ30	1
	TOTAL:	**8**

[12]

QUESTION 3: FIRST-ANGLE ORTHOGRAPHIC PROJECTION

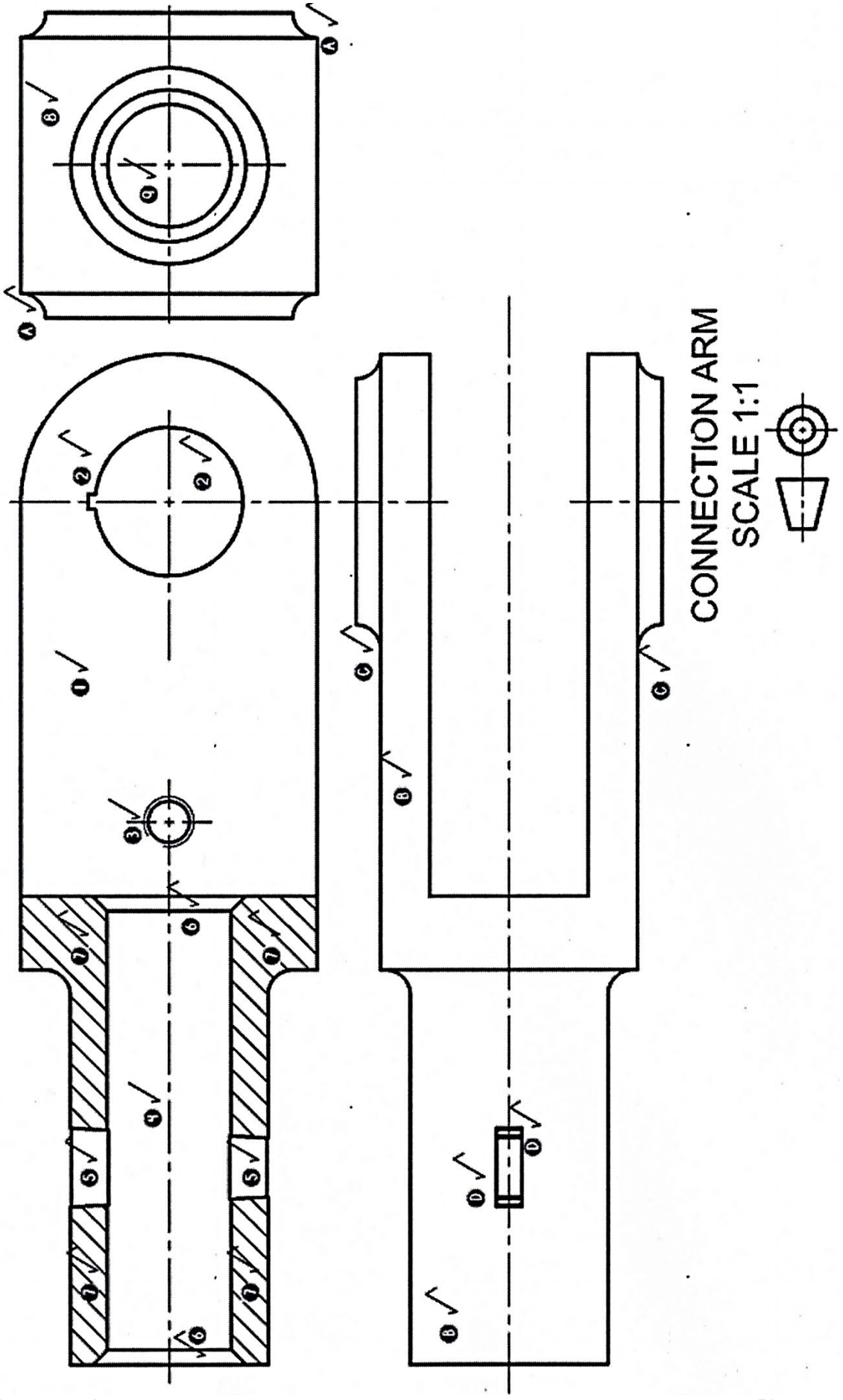

MARKING CRITERIA	
Correctness:	
SFV	8
TV	3
LV	3
Line work	3
Accuracy	2
Title and scale	2
Projection symbol	1
Layout and neatness	1
TOTAL:	**23**

MARK ALLOCATION FOR CORRECTNESS

SFV

1	Fork end (not sectioned)	1
2	Hole and keyway	1
3	Threaded hole	1
4	Cover sleeve – hole Ø 25 (not sectioned)	1
5	Tapered Slot (not sectioned)	1
6	Chamfer	1
7	Sectioning	2
	TOTAL:	**8**

LV

8	Fork end	1
9	Cover sleeve - hole Ø 25 and fillet Ø's	1
A	Filleted sides	1
	TOTAL:	**3**

TV

B	Outline	1
C	Filleted sides	1
D	Tapered slot detail	1
	TOTAL:	**3**

[23]

QUESTION 4: ISOMETRIC

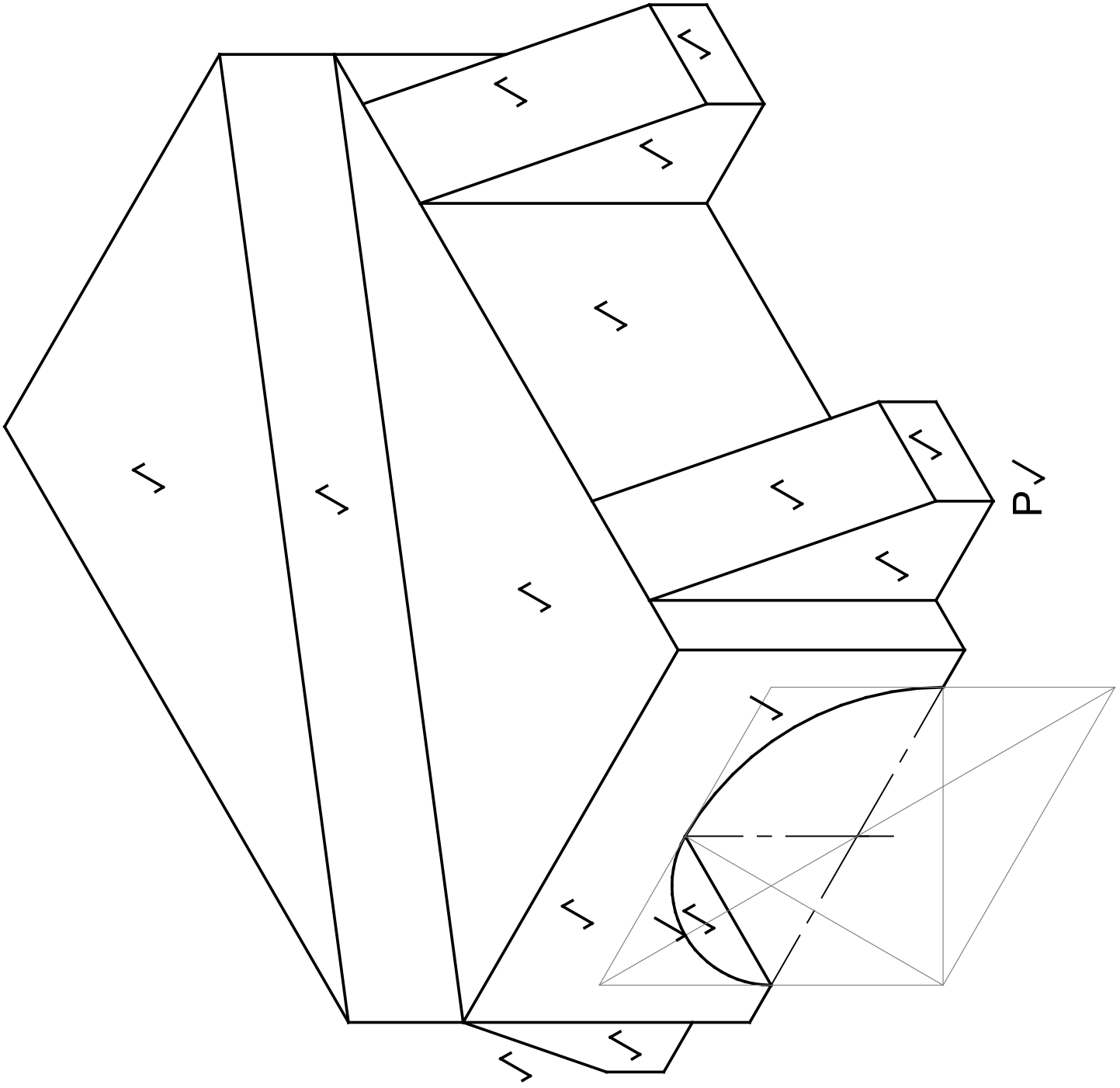

MARKING CRITERIA	
Correctness	9
Point P in correct position	1
Line work	2
Accuracy	1
Layout and neatness	1
TOTAL:	**14**

MARK ALLOCATION FOR CORRECTNESS

½	mark for each of the areas indicated on the marking guideline	7		
2	marks for the construction and completed semi-circle	2		
		9	**marks**	**[14]**

QUESTION 5: INTERPENETRATION

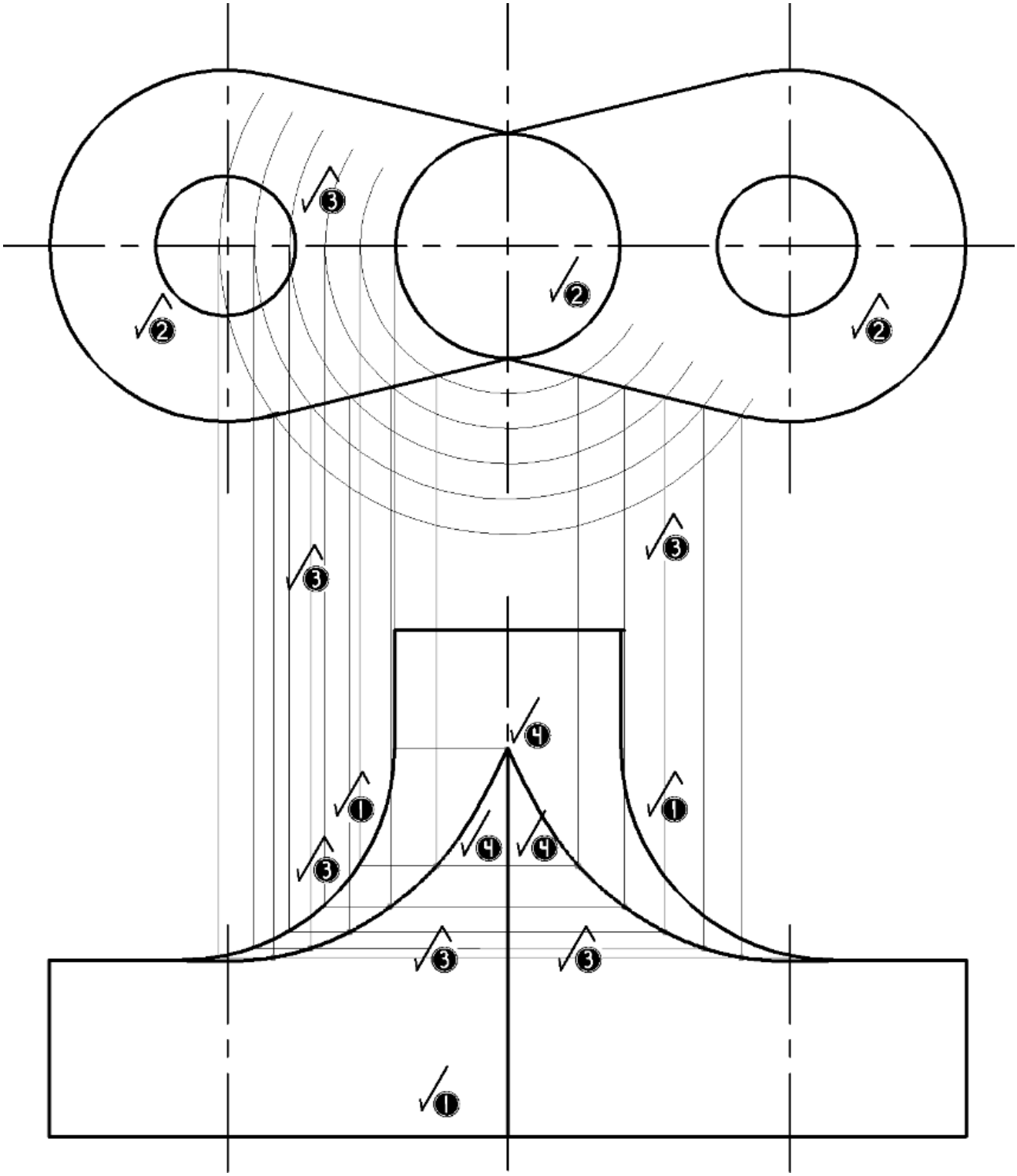

MARKING CRITERIA	
Correctness:	
FV and TV	4
Construction lines (to project curve)	3
Interpenetration Curve	3
Line work	2
Accuracy	1
TOTAL:	**13**

MARK ALLOCATION FOR CORRECTNESS – QUESTION 5

1	Front view	2 MARKS
2	Top view	2 MARKS
3	Construction lines (to project the curve)	3 MARKS
4	Interpenetration curves	3 MARKS
	TOTAL	**10 MARKS**

Copyright reserved

QUESTION 6: THIRD-ANGLE ORTHOGRAPHIC PROJECTION AND MACHINE SYMBOLS

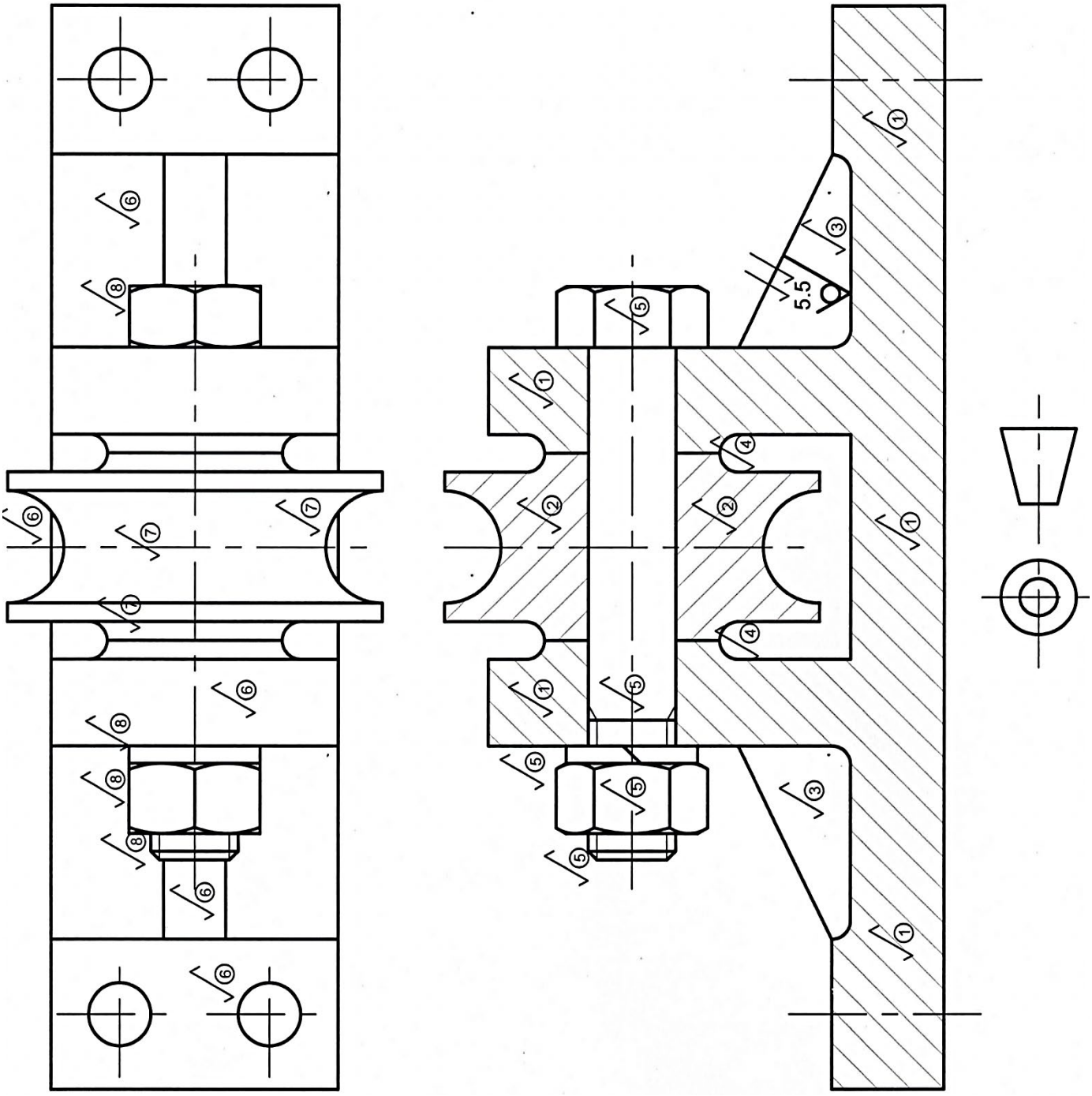

MARKING CRITERIA	
Correctness:	
FV	8
TV	6
Machine symbol	2
Projection symbol	
Line work	3
Accuracy	2
Layout and neatness	1
TOTAL:	**23**

MARK ALLOCATION FOR CORRECTNESS

SFV

1	Sectioning - base	2½
2	Sectioning - pulley	1
3	Ribs (not sectioned)	1
4	Fillets	1
5	Bolt, washer and nut	2½
	TOTAL:	**8**

TV

6	Base detail	2½
7	Pulley detail	1½
8	Bolt, washer and nut	2
	TOTAL:	**6**

[23]

TOTAL: 100

Copyright reserved