higher education & training

Department:
Higher Education and Training
REPUBLIC OF SOUTH AFRICA

MARKING GUIDELINE

NATIONAL CERTIFICATE

ENGINEERING DRAWING N2

22 MARCH 2018

This marking guideline consists of 7 pages.

Copyright reserved

INSTRUCTIONS AND INFORMATION

1. Copying and transferring drawings from CAD to Word may affect its accuracy.

2. ALL markers must have a fully completed marking guideline to use in the marking process.

QUESTION 1: THREADS, ABBREVIATIONS, WELDING

MARKING CRITERIA		MARK ALLOCATION
1.1.1-1.1.6	Proportions	**6**
1.2.1-1.2.3	Abbreviations	**3**
1.3	Welding	**3**
1.4	Welding joints	**5**
	TOTAL	**17**

QUESTION 1: THREADS, ABBREVIATIONS, WELDING

1.1 1.1.1 1,5 × D ✓
1.1.2 0,7 × D ✓
1.1.3 0,8 × D ✓
1.1.4 0,1 × D ✓
1.1.5 0,3 × D ✓
1.1.6 0,3 × D ✓

(6 × 1) (6)

1.2 1.2.1 PCD ✓
1.2.2 CL ✓
1.2.3 ID ✓

(3 × 1) (3)

1.3 It is where welding needs to done the whole length of the joint ✓ irrespective of the form of the joint ✓ and is indicated by a symbol on the drawing. ✓ (3)

1.4
- Butt joint ✓
- Lap joint ✓
- T-joint ✓
- Corner joint ✓
- Edge joint ✓

(5)
[17]

QUESTION 2: SCREW THREADS

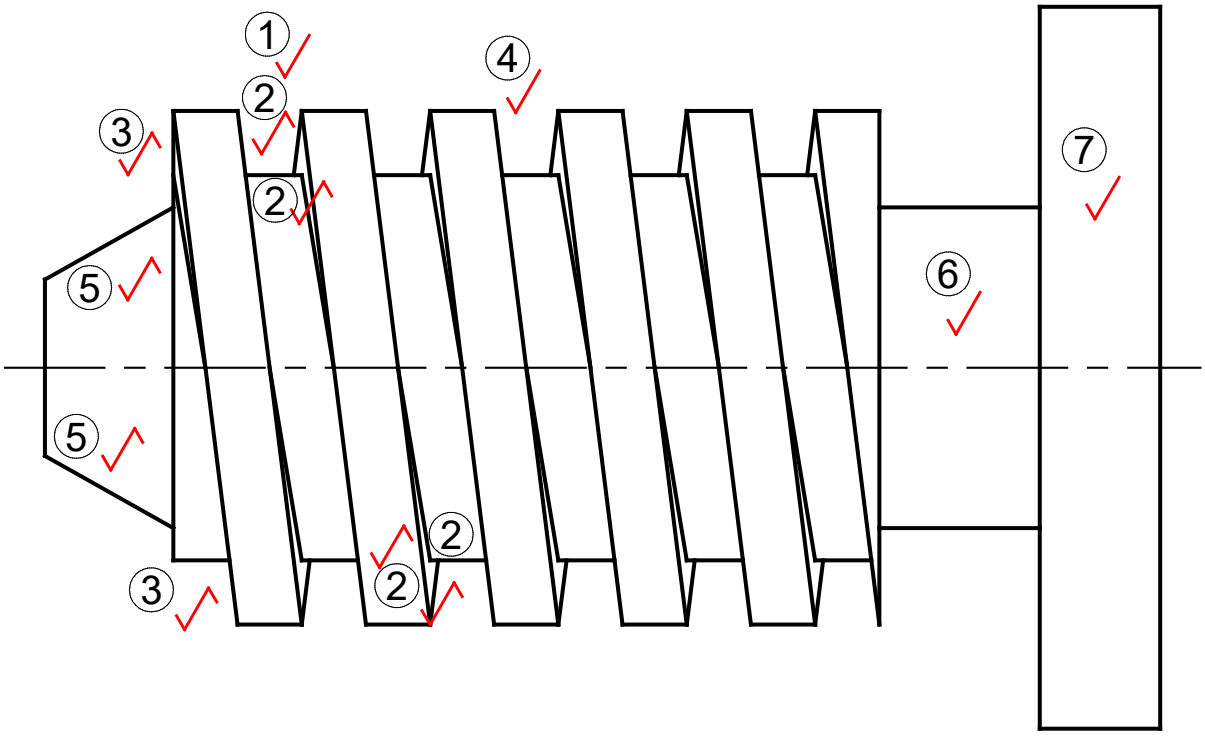

MARKING CRITERIA			
	DIRECTION	①	1
	DETAIL	②	2
CORRECTNESS	START DETAIL	③	1
	PITCH	④	1
	FRONT STUB	⑤	1
	UNDERCUT	⑥	1
	SHOULDER	⑦	1
LINE WORK			2
ACCURACY			1
LAYOUT AND NEATNESS			1
		TOTAL	12

[12]

QUESTION 3: FIRST-ANGLE ORTHOGRAPHIC PROJECTION

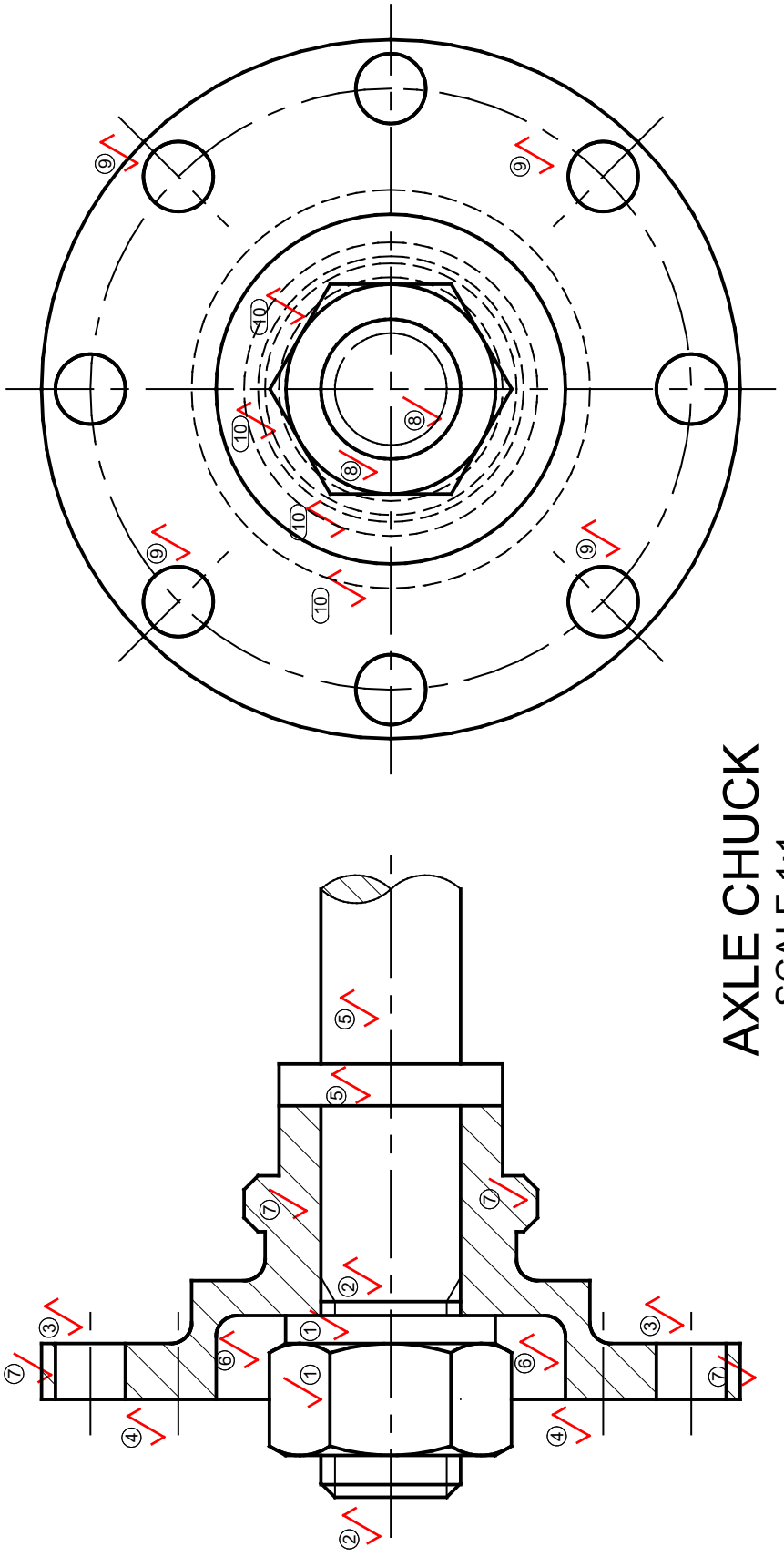

AXLE CHUCK
SCALE 1:1

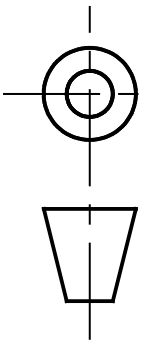

FRONT VIEW

MARKING CRITERIA			
CORRECTNESS	M20 NUT AND WASHER IN POSITON	①	2
	THREAD BEFORE AND AFTER NUT	②	1
	Ø10 HOLES	③	1
	CENTRE LINE OF HOLES	④	1
	AXLE AND SHOULDER	⑤	1
	AREA NOT SECTIONED	⑥	1
	HATCHING	⑦	4
ACCURACY			1
LINE WORK			1

LEFT VIEW

MARKING CRITERIA			
CORRECTNESS	M20 NUT AND THREAD OF SHAFT	⑧	2
	Ø10 x 8 (½ MARK PER 2 HOLES)	⑨	2
	HIDDEN DETAIL	⑩	2
ACCURACY			1
LINE WORK			1
PRINTING OF TITLE & SCALE CENTRALLY BENEATH LAYOUT			2
ORTHOGRAPHIC PROJECTION SYMBOL			1
LAYOUT AND NEATNESS			1
TOTAL			25

[25]

QUESTION 4: ISOMETRIC

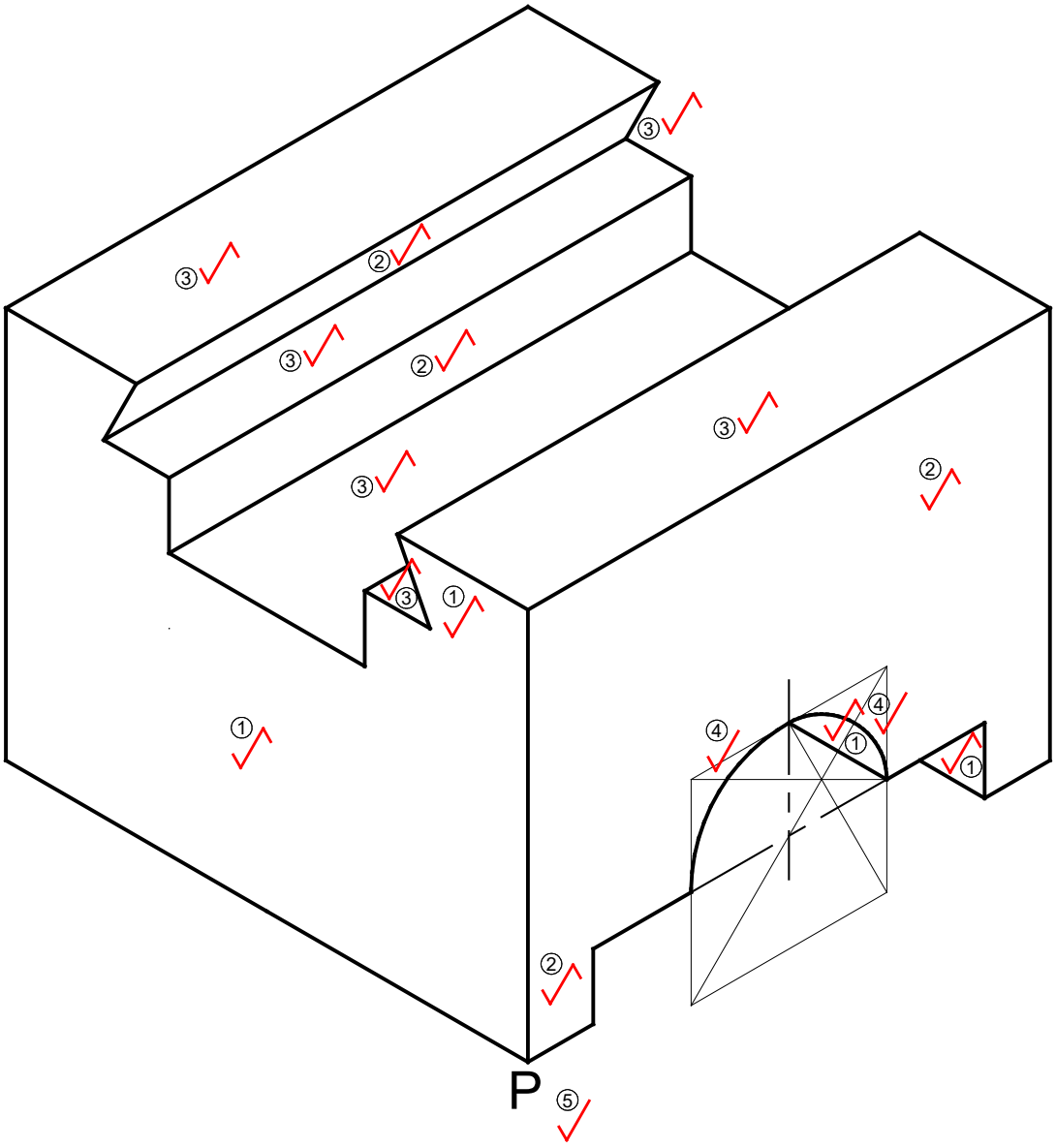

MARKING CRITERIA			
CORRECTNESS	LEFT PLANE	①	2
	FRONT PLANE	②	2
	TOP PLANE	③	3
	SEMI-CIRCLE	④	2
POINT P		⑤	1
LINE WORK			2
ACCURACY			1
LAYOUT AND NEATNESS			1
		TOTAL	14

[14]

QUESTION 5: INTERPENETRATION

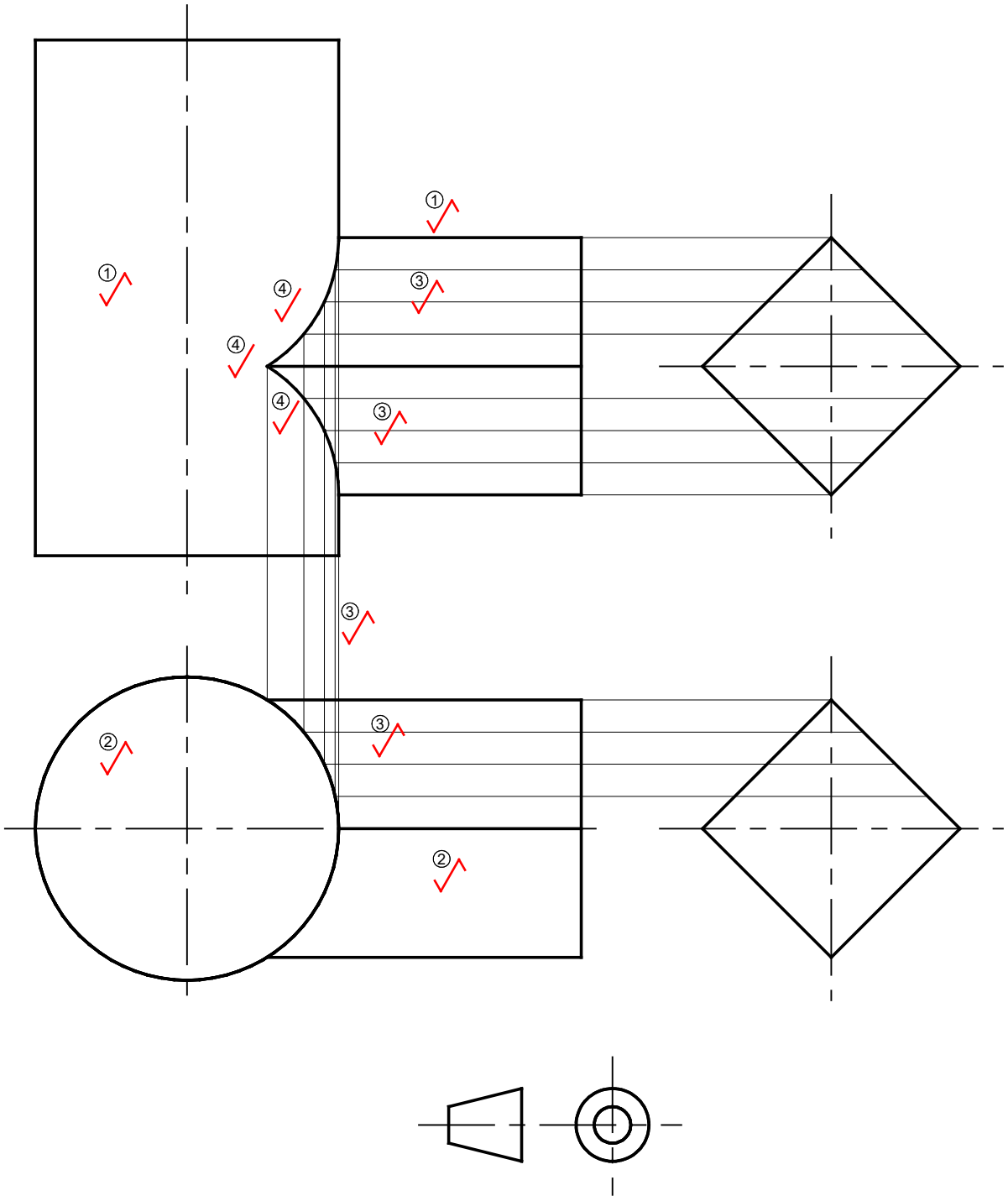

MARKING CRITERIA			
CORRECTNESS	FRONT VIEW	①	1
	TOP VIEW	②	1
CONSTRUCTION LINES FOR CURVE		③	2
INTERPENETRATION CURVE		④	3
LINE WORK			2
ACCURACY			2
LAYOUT AND NEATNESS			1
		TOTAL	12

[12]

QUESTION 6: THIRD-ANGLE ORTHOGRAPHIC PROJECTION AND MACHINE SYMBOLS

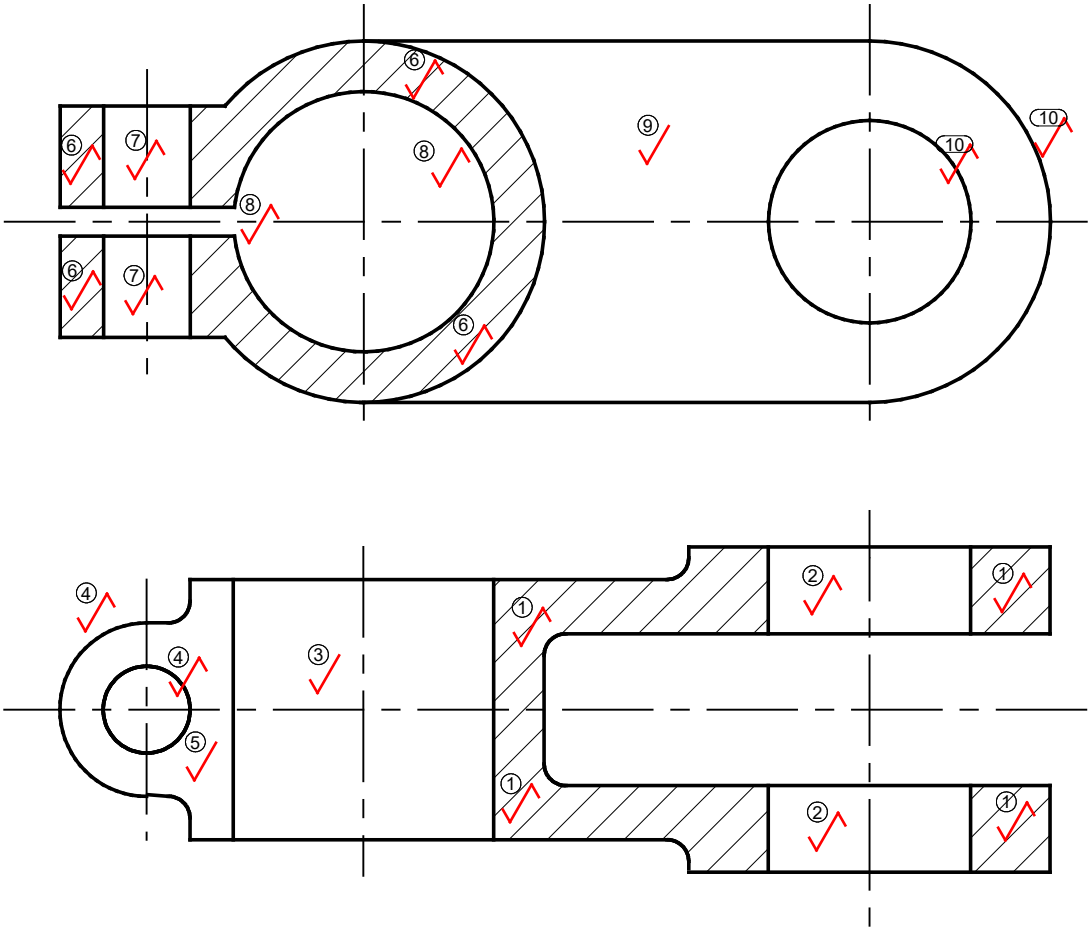

CLAMP LINK
SCALE 1:1

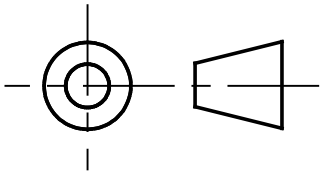

	MARKING CRITERIA			
FRONT VIEW	CORRECTNESS	HATCHING	①	2
		Ø28 HOLE	②	1
		Ø36 HOLE	③	1
		Ø12 HOLE AND OUTLINE	④	1
		AREA NOT SECTIONED	⑤	1
	ACCURACY			1
	LINE WORK			1
TOP VIEW	CORRECTNESS	HATCHING	⑥	2
		Ø12 HOLES	⑦	1
		4 MM GAP & Ø36 HOLE	⑧	1
		AREA NOT SECTIONED	⑨	1
		Ø28 HOLE AND OUTLINE	⑩	1
	ACCURACY			1
	LINE WORK			1
PRINTING OF TITLE AND SCALE CENTRALLY BENEATH LAYOUT				2
ORTHOGRAPHIC PROJECTION SYMBOL				1
LAYOUT AND NEATNESS				1
			TOTAL	20

[20]

TOTAL: 100

Copyright reserved