higher education & training

Department:
Higher Education and Training
REPUBLIC OF SOUTH AFRICA

NATIONAL CERTIFICATE

ENGINEERING DRAWING N1

(8090261)

26 July 2021 (X-paper)
09:00–13:00

REQUIREMENTS: ONE A2 drawing sheet

Drawing instruments may be used.

This question paper consists of 8 pages.

026Q1G2126

Copyright reserved

DEPARTMENT OF HIGHER EDUCATION AND TRAINING
REPUBLIC OF SOUTH AFRICA

NATIONAL CERTIFICATE
ENGINEERING DRAWING N1
TIME: 4 HOURS
MARKS: 100

INSTRUCTIONS AND INFORMATION

1. Answer all the questions.
2. Read all the questions carefully.
3. Number the answers according to the numbering system used in this question paper.
4. Use both sides of the DRAWING SHEET.
5. Draw a 15 mm border on both sides of the DRAWING SHEET.
6. Do all drawing work, including candidate information, in pencil.
7. All drawing work must conform to the latest SANS 10111 Code of Practice for Engineering Drawing.
8. Work neatly.

Copyright reserved

QUESTION 1: GENERAL ENGINEERING DRAWING TERMS

1.1 Draw, full size, the answer block shown in FIGURE 1 on the DRAWING SHEET.

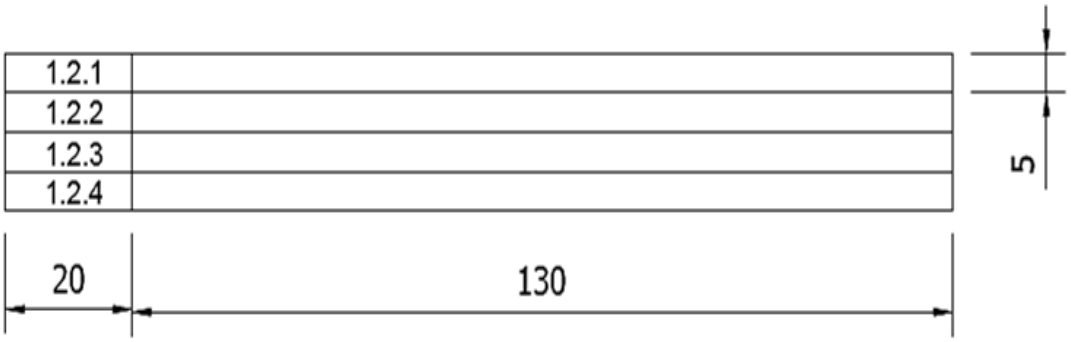

FIGURE 1 (1)

1.2 Answer the following questions. Write only the answers in the answer block on the DRAWING SHEET, drawn in QUESTION 1.1 above:

1.2.1 What is the meaning of the abbreviation PCD in engineering drawing terms?

1.2.2 What abbreviation is used to indicate across corners?

1.2.3 What is a six-sided figure called?

1.2.4 What does bisect an angle mean?

(4 × 1) (4)
[5]

QUESTION 2: FREEHAND DRAWING

FIGURE 2 shows a view of a spanner.

Using only a pencil and an eraser, draw the view of the spanner in good proportion, twice the given size.

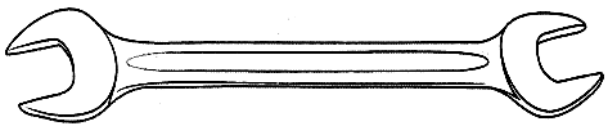

FIGURE 2 **[10]**

Copyright reserved

QUESTION 3: GEOMETRICAL CONSTRUCTION/REPRODUCTION DRAWING

FIGURE 3 shows a view of a cover plate.

3.1 Use a scale of 1:2 and draw the view of the cover plate.

Use the four-centre method to construct the ellipse. Show all construction. (15)

3.2 Insert any TWO dimensions on your drawing. (1)

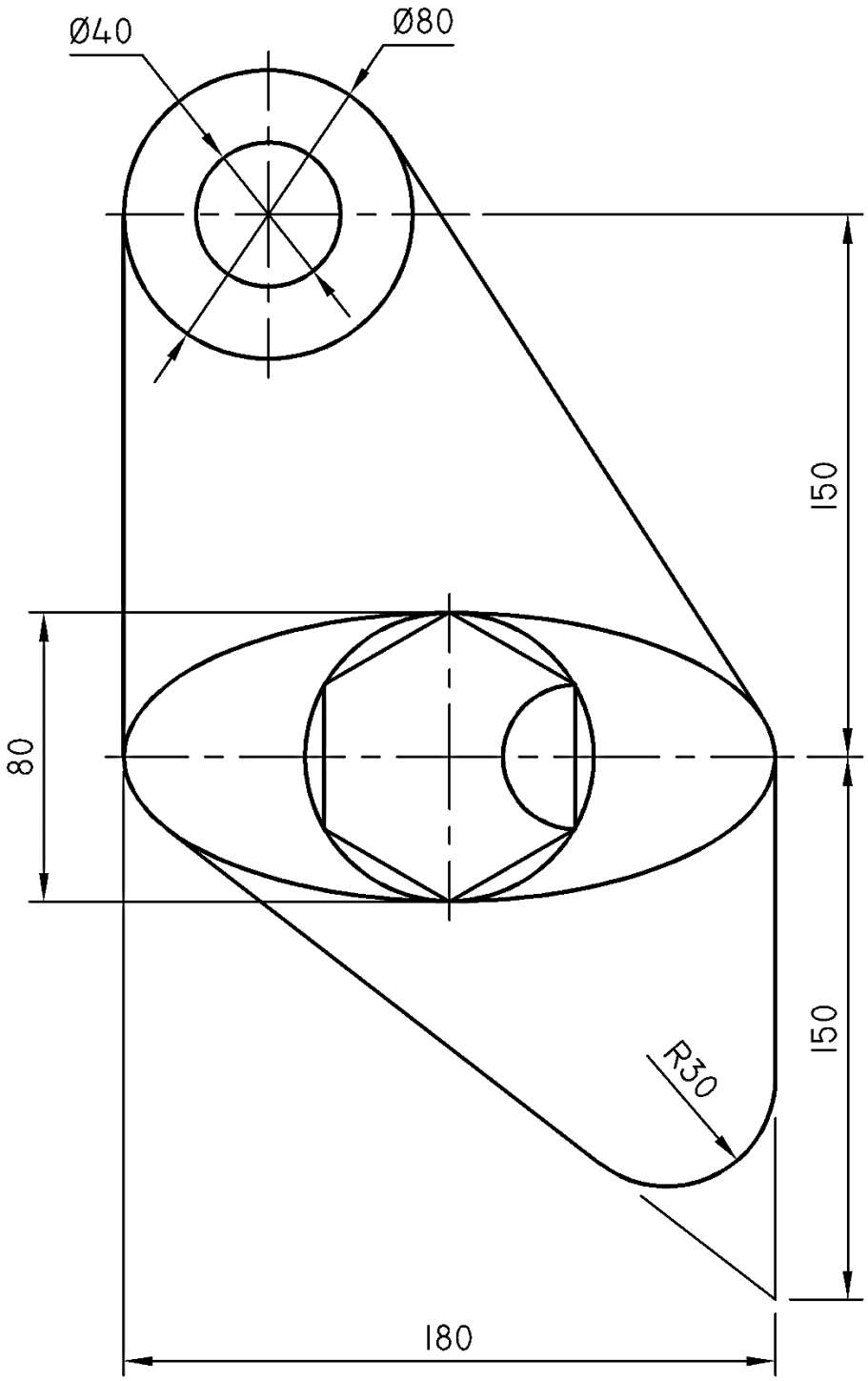

FIGURE 3 **[16]**

QUESTION 4: FIRST-ANGLE ORTHOGRAPHIC PROJECTION

FIGURE 4 shows an isometric view of a component.

Draw, to scale 1:1 and in first-angle orthographic projection, the following views of the component:

4.1 A front view as seen in the direction of arrow F (5)

4.2 A left view as seen in the direction of arrow L (4)

4.3 A top view as seen in the direction of arrow T (5)

4.4 The symbol for first-angle orthographic projection beneath the layout (1)

NOTE: No hidden detail is required.

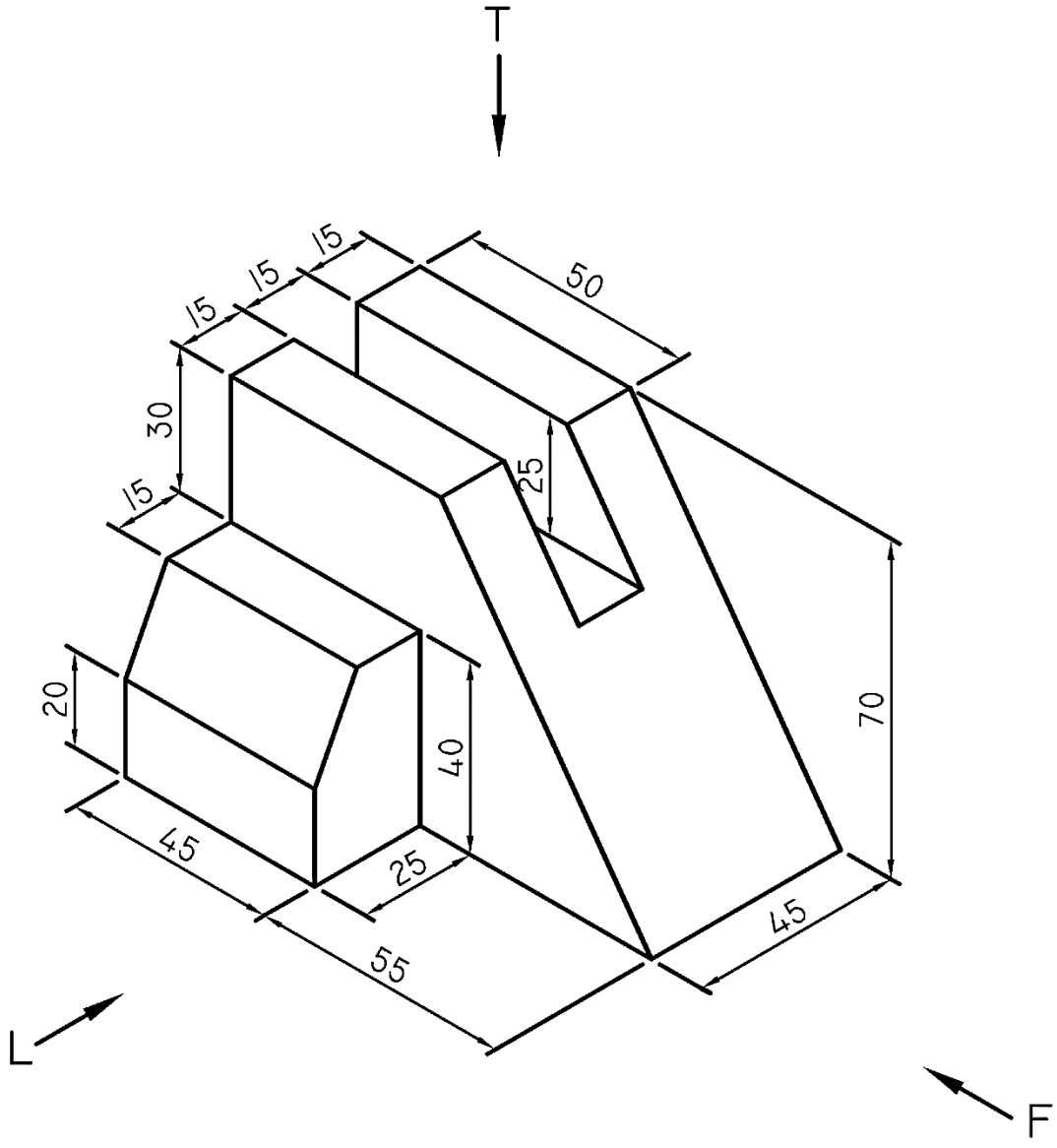

FIGURE 4 **[15]**

QUESTION 5: ISOMETRIC DRAWING

FIGURE 5 shows TWO primary views of a component in first-angle orthographic projection.

Draw, to scale 1:1, an isometric view of the model.

Point P must be the lowest point on your drawing.

NOTE: No hidden detail is required.

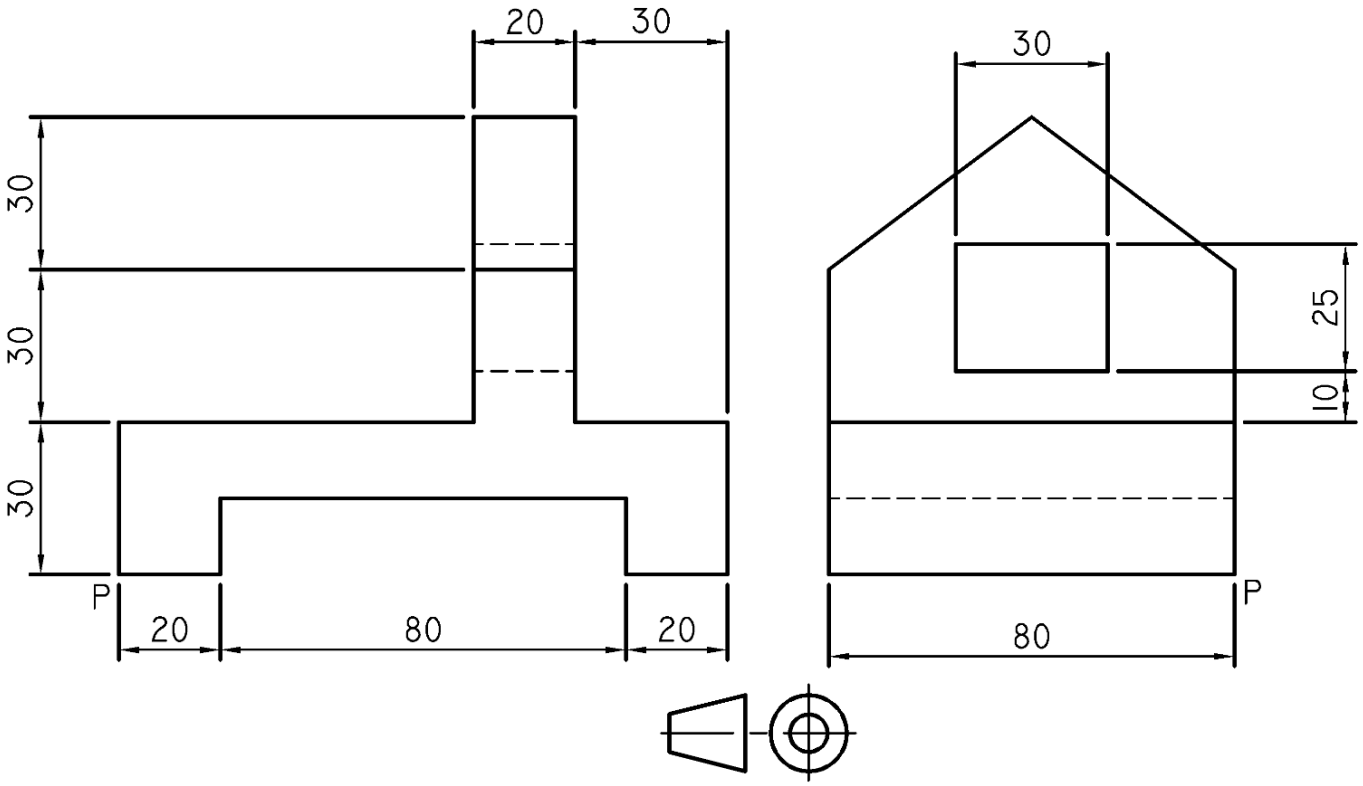

FIGURE 5 **[17]**

Copyright reserved

QUESTION 6: SECTIONAL DRAWING

FIGURE 6 shows TWO primary views of a casting in first-angle orthographic projection.

Draw, to scale 1:1 and in first-angle orthographic projection, the following views of the casting:

6.1 A full-sectional front view on cutting plane Y–Y (6)

6.2 A full-sectional top view on cutting plane X–X (6)

6.3 An outside left view (4)

6.4 Print the following title and scale centrally beneath the layout:

CASTING
SCALE 1:1 (1)

NOTE: No hidden detail is required.

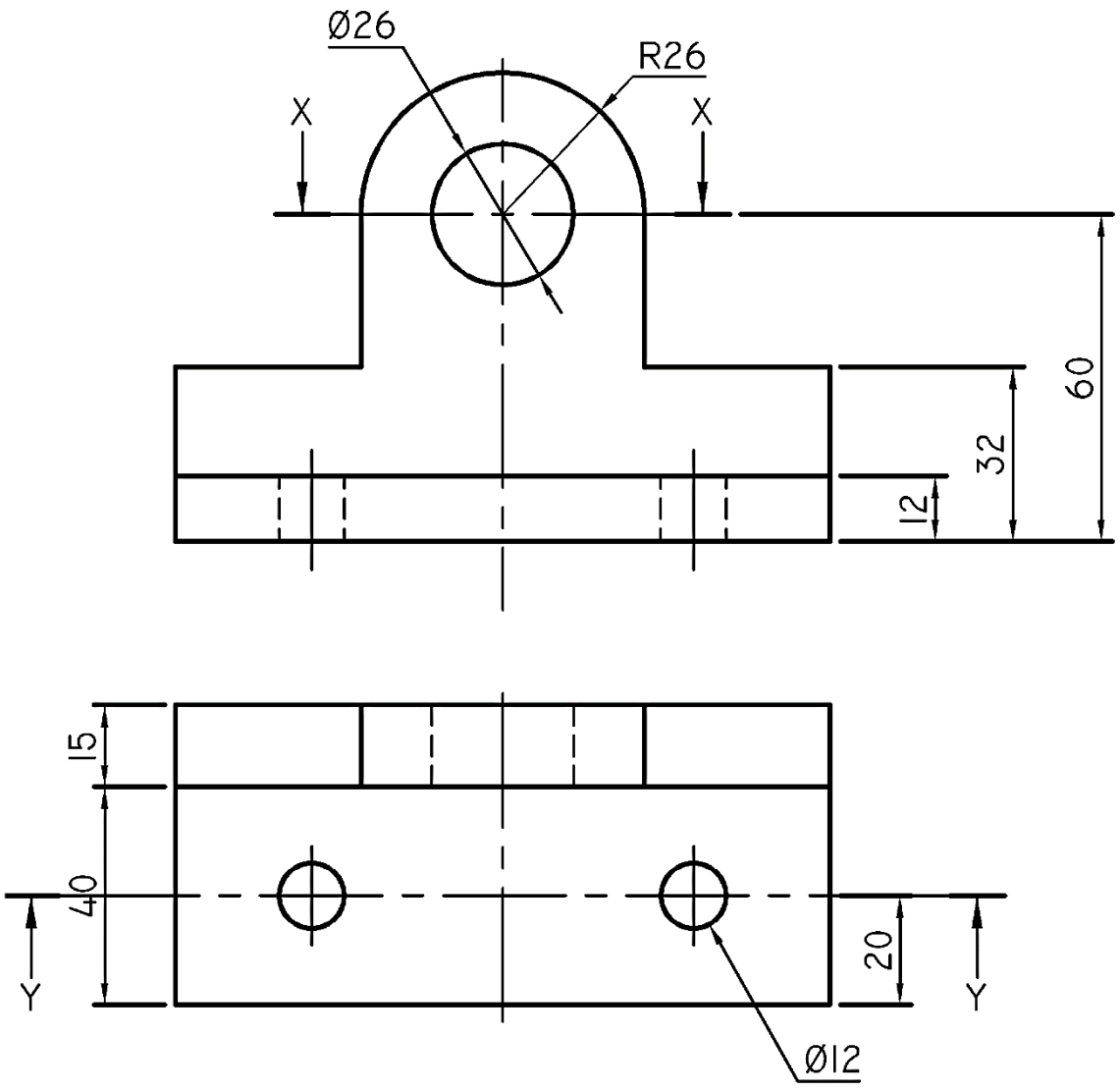

FIGURE 6 **[17]**

QUESTION 7: PRISMS AND PYRAMIDS

FIGURE 7 shows the front view and an auxiliary view of a cone.

Draw, to scale 1:1 and in first-angle orthographic projection, the following views of the cone:

7.1 The given front and auxiliary views (4)

7.2 A left view as seen in the direction of arrow L (6)

NOTE: No hidden detail is required.

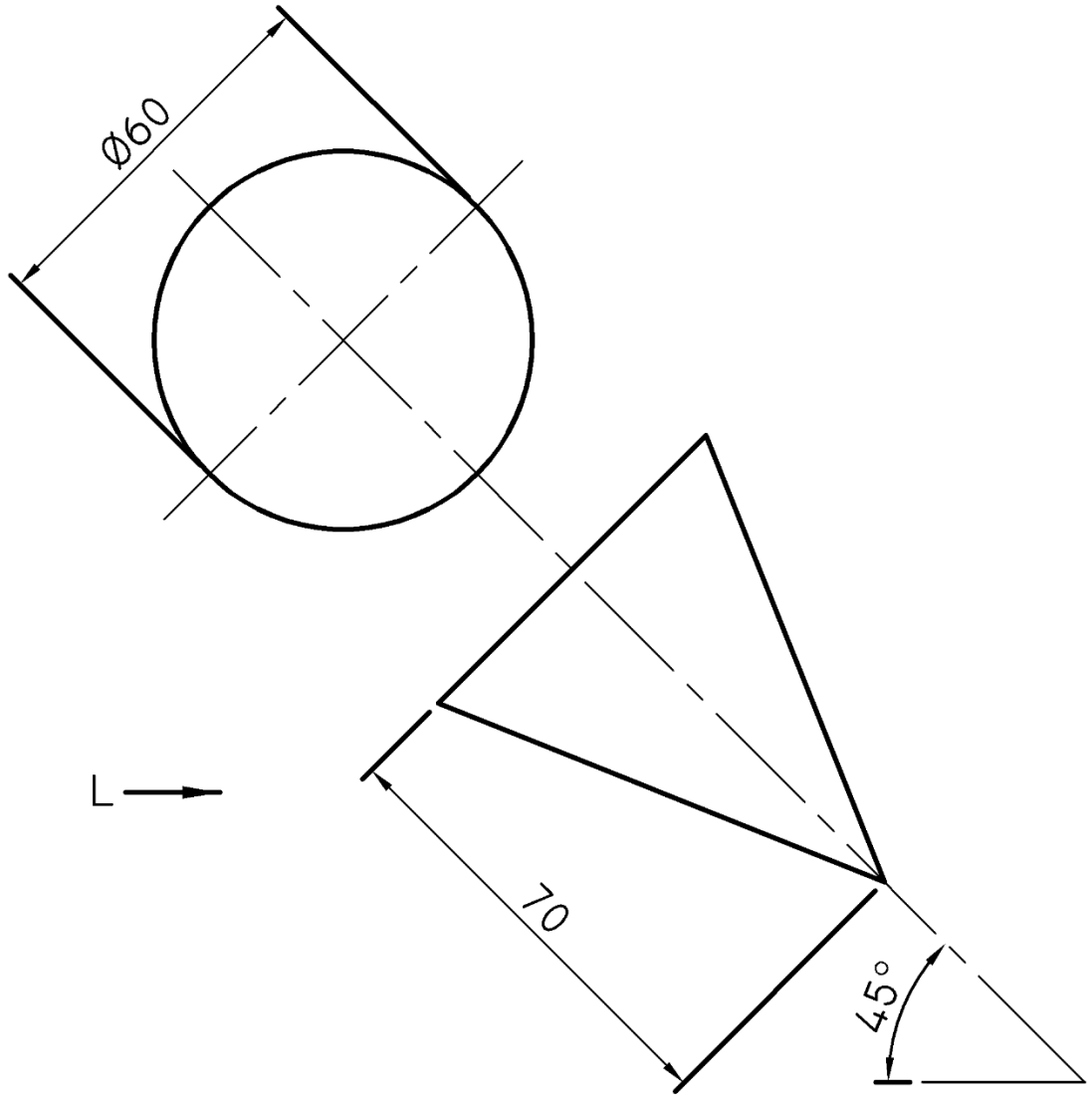

FIGURE 7 **[10]**

Balanced layout and neatness of the completed DRAWING SHEET. **[10]**

TOTAL: 100

Copyright reserved