higher education & training

Department:
Higher Education and Training
REPUBLIC OF SOUTH AFRICA

MARKING GUIDELINE

NATIONAL CERTIFICATE

ENGINEERING DRAWING N1

26 July 2021

This marking guideline consists of 13 pages.

Copyright reserved

INSTRUCTIONS AND INFORMATION

1. Copying and scanning of drawings will affect the accuracy thereof on the marking guideline.

2. ALL markers are requested to prepare their own marking guideline to use when marking candidates' answers.

QUESTION 1: GENERAL ENGINEERING DRAWING TERMS

1.1 & 1.2

1.2.1	PITCH CIRCLE DIAMETER
1.2.2	AC
1.2.3	HEXAGON
1.2.4	DIVIDE AN ANGLE INTO TWO EQUAL ANGLES

(4 × 1 + 1 for drawing the block) **[5]**

QUESTION 2: FREEHAND DRAWING

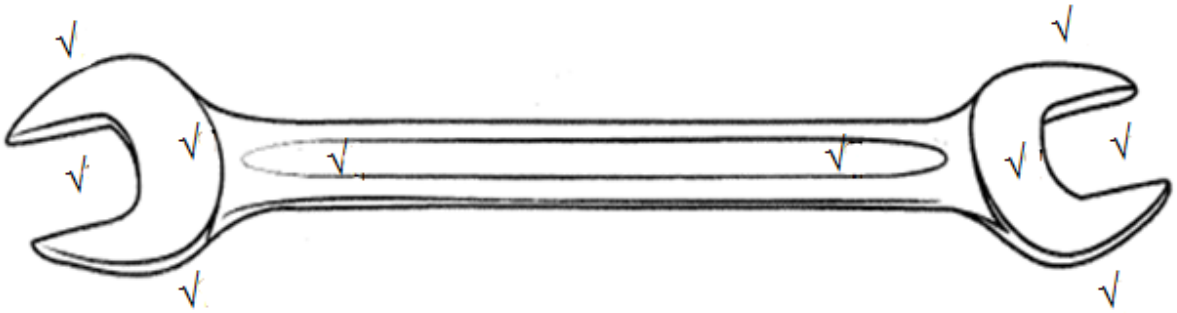

MARK ALLOCATION	
CORRECTNESS	5
LINEWORK	3
ACCURACY	2
TOTAL	**10**

MARK ALLOCATION FOR CORRECTNESS	
½ mark for each opening	1
1½ mark for the shape of each jaw	3
1 mark for the shaft of the spanner	1

[10]

QUESTION 3: GEOMETRICAL CONSTRUCTION/REPRODUCTION DRAWING

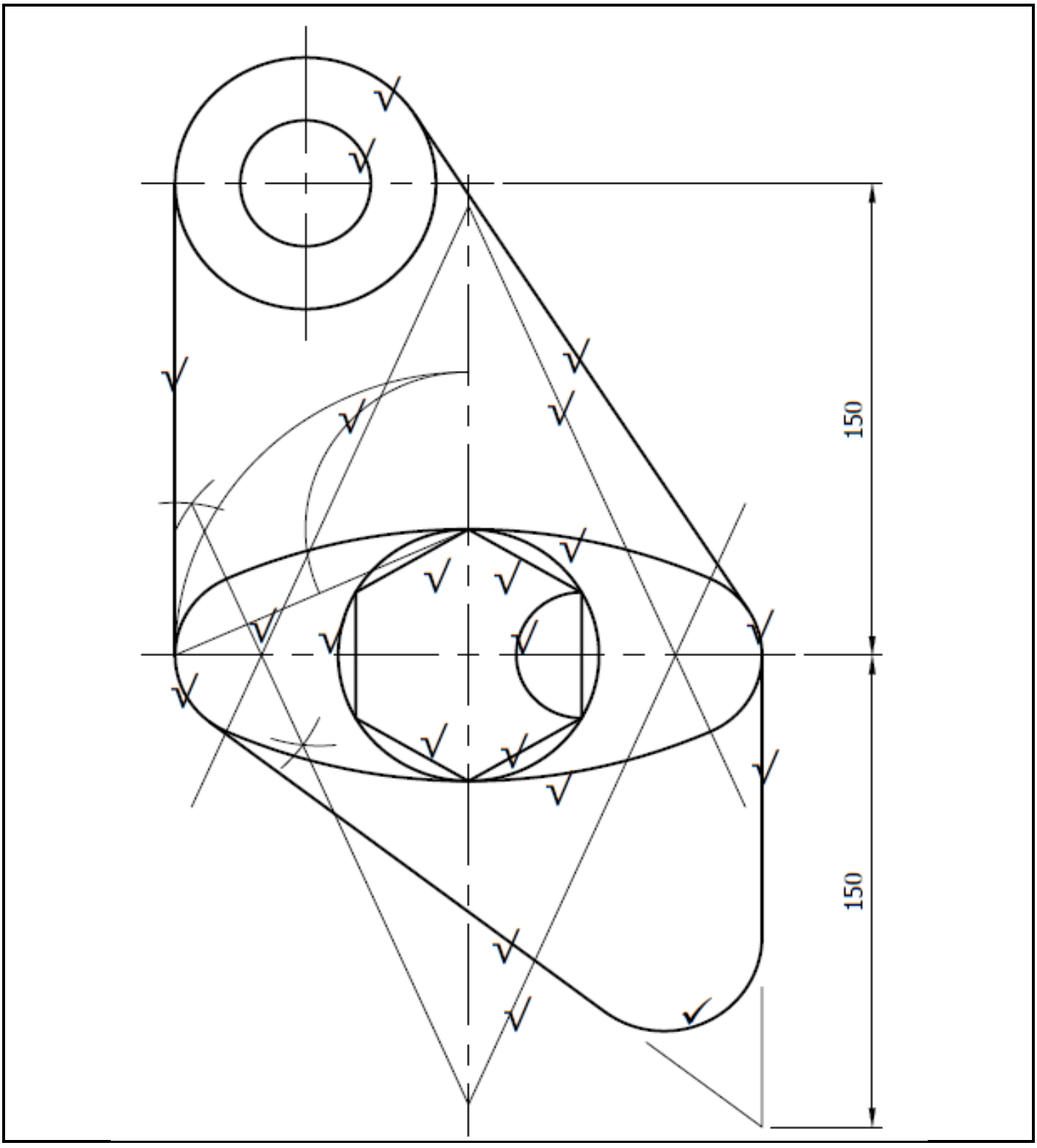

Copyright reserved

MARK ALLOCATION	
CORRECTNESS	11
LINEWORK	2
ACCURACY	2
DIMENSIONS	1
TOTAL	**16**

MARK ALLOCATION FOR CORRECTNESS		
Construction of the ellipse		**4**
Two construction arcs	½	
Bisecting the line	½	
Constructing the V	½	
Constructing the upside-down V	½	
½ mark for each of the four curves forming the ellipse	2	
Construction of the hexagon		**2**
½ mark for each of the concentric circles		**1**
Circle (circumscribed about the hexagon)		**½**
Semi-circle		**½**
Four straight lines (4 × ½)		**2**
Blended arc		**1**

[16]

QUESTION 4: FIRST-ANGLE ORTHOGRAPHIC PROJECTION

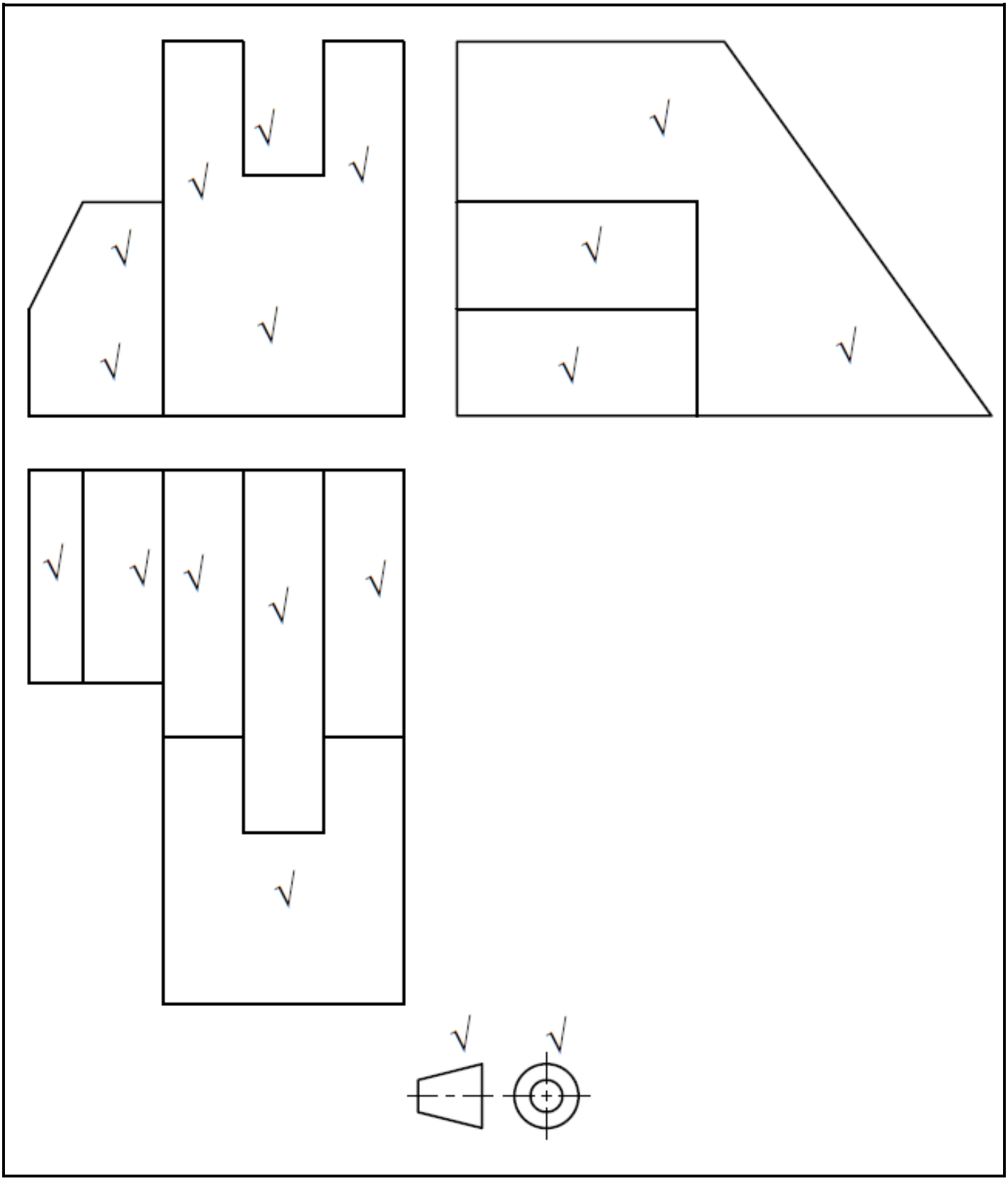

MARK ALLOCATION			
	FRONT	**LEFT**	**TOP**
CORRECTNESS	3	2	3
LINEWORK	1	1	1
ACCURACY	1	1	1
PROJECTION SYMBOL	1		
TOTAL	**15**		

MARK ALLOCATION FOR CORRECTNESS		
Front View		**3**
½ mark for each protruding part	1	
Gap	½	
Sloping face	½	
Truncated block on the left-hand side	1	
Left View		**2**
½ mark for each rectangle	1	
Area at the back	1	
Top View		**3**
½ mark for the sloping face	½	
½ mark for each rectangle	2½	

[15]

QUESTION 5: ISOMETRIC DRAWING

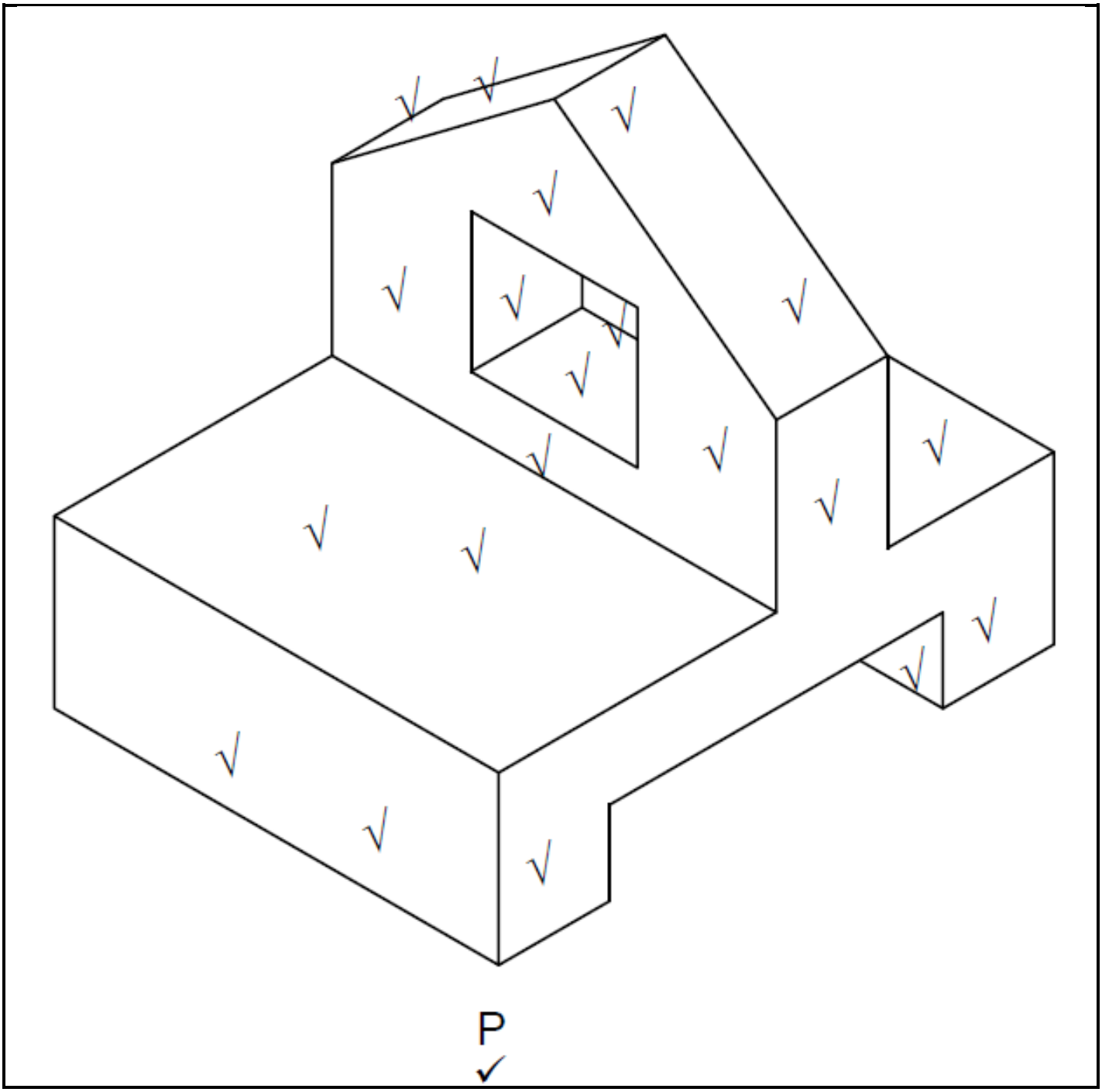

MARK ALLOCATION	
CORRECTNESS	10
LINEWORK	3
ACCURACY	3
LOWEST POINT P	1
TOTAL	**17**

Copyright reserved

MARK ALLOCATION FOR CORRECTNESS	
Front face	1½
1 mark for each sloping surface	2
Left view of the base	1
Top view of the base in front of the upright	1
Top view of the base behind the upright	½
Square hole	1½
Left view of the upright	2
Visible area of the recess at the bottom	½

[17]

QUESTION 6: SECTIONAL DRAWING

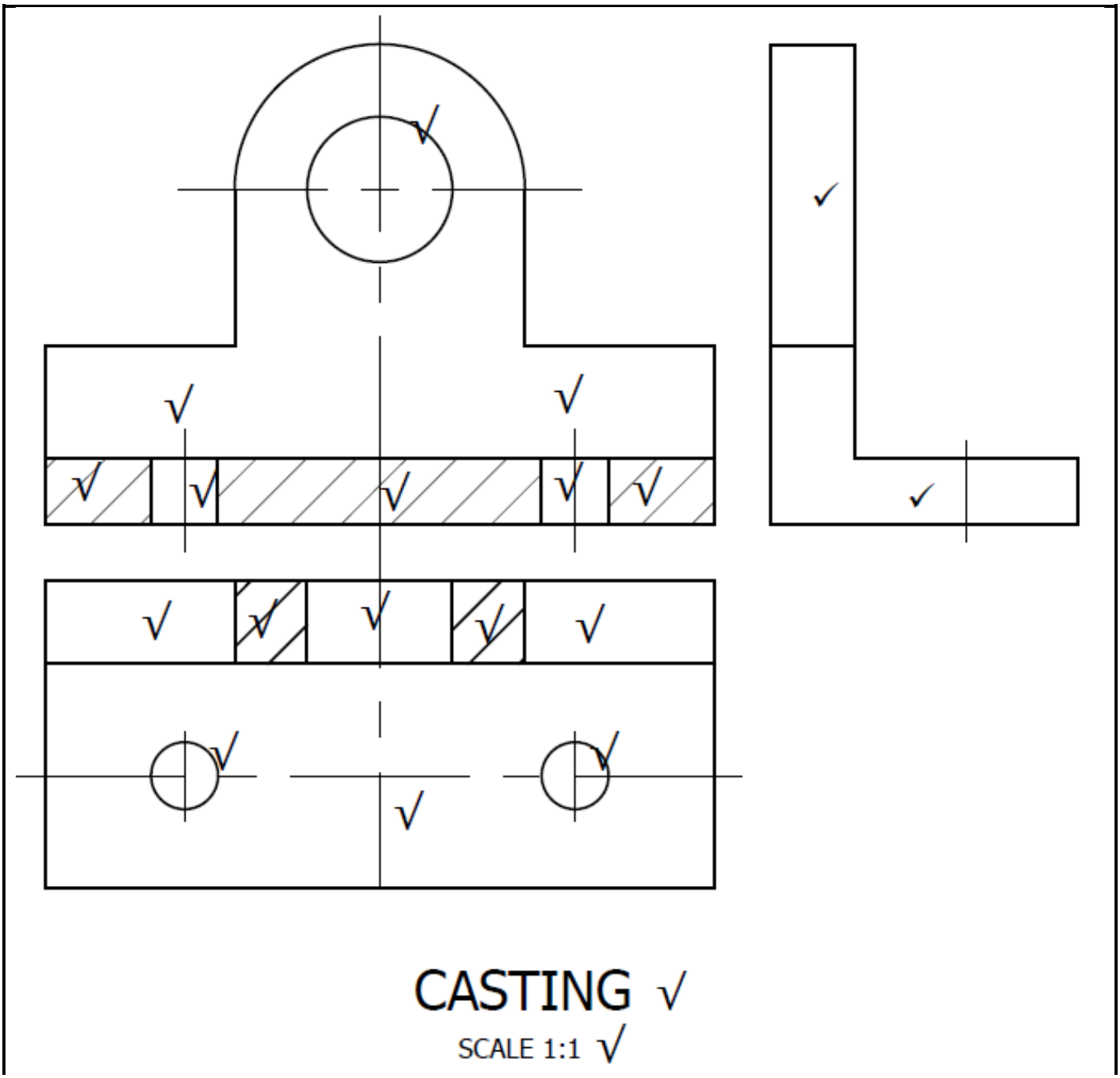

MARK ALLOCATION			
	FRONT	**LEFT**	**TOP**
CORRECTNESS	4	4	2
LINEWORK	1	1	1
ACCURACY	1	1	1
TITLE & SCALE	1		
TOTAL	**17**		

Copyright reserved

MARK ALLOCATION FOR CORRECTNESS		
Full-sectional Front View		**4**
Correct sectioning of the base	1½	
½ mark for each hole on the base not sectioned	1	
Upright not sectioned	1	
Hole in the upright	½	
Full-sectional Top View		**4**
Correct sectioning of the upright	1	
½ mark for each area of the upright not sectioned	1½	
Top view of the base	½	
½ mark for each hole on the base	1	
Left View		**2**
1 mark for the 'L' shape	1	
1 mark for the upright	1	

[17]

QUESTION 7: PRISMS AND PYRAMIDS

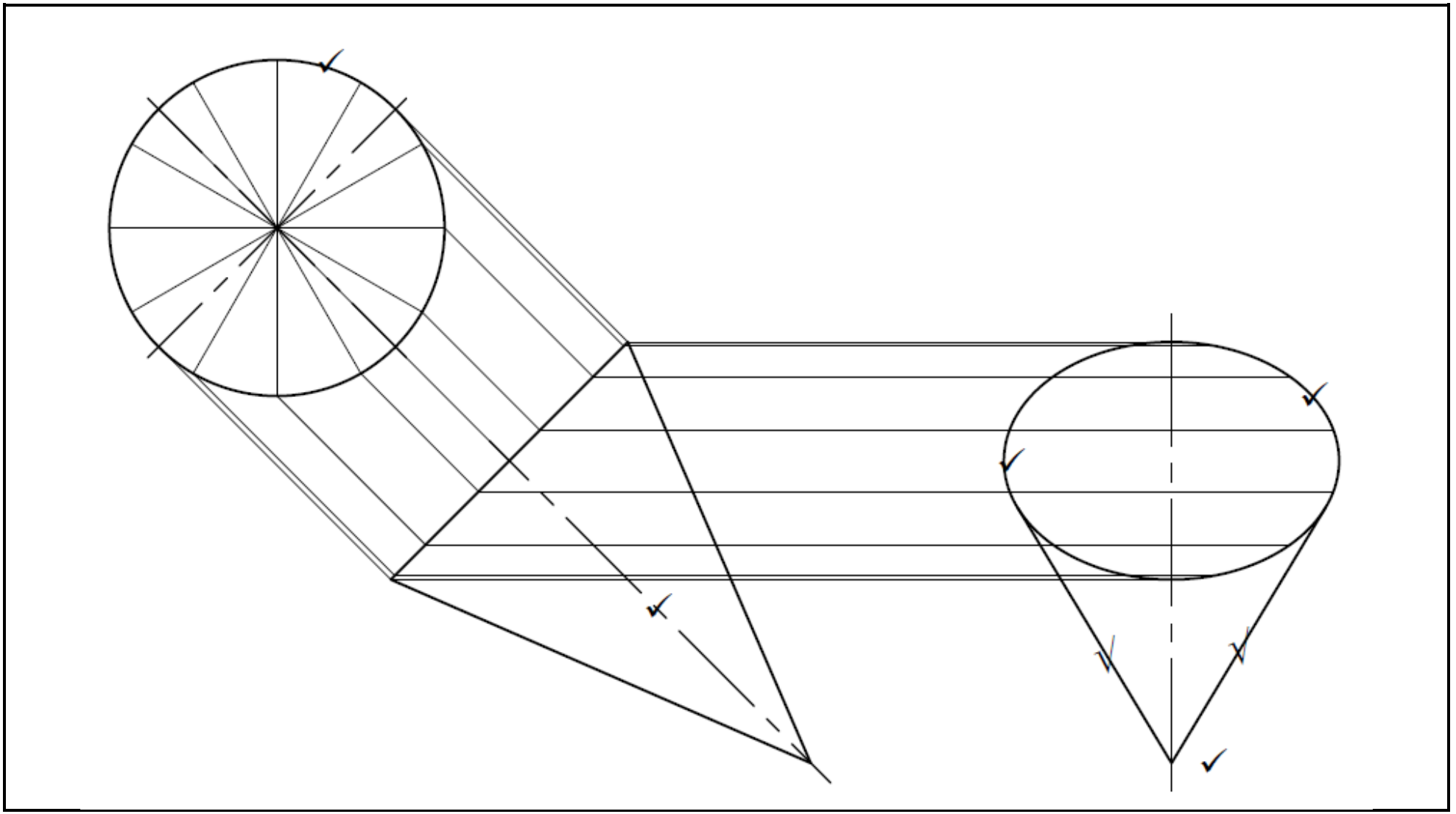

Copyright reserved

MARK ALLOCATION		
	FRONT	**TOP**
CORRECTNESS	2	4
LINEWORK	1	1
ACCURACY	1	1
TOTAL	**10**	

MARK ALLOCATION FOR CORRECTNESS		
Front/Auxiliary Views		**2**
1 mark for the circle on the auxiliary view	1	
1 mark for cone on the front view	1	
Top View		**4**
2 marks for the ellipse	2	
½ mark for each slanting side of the cone	1	
1 for the apex	1	

[10]

MARK ALLOCATION FOR BALANCED LAYOUT AND NEATNESS OF THE DRAWING SHEET	
All questions answered	1
Questions correctly numbered	1
All drawings done in pencil	1
Both sides of the drawing sheet used	1
15 mm border drawn on both sides of the drawing sheet	2
Good planning/well-spaced answers	2
General neatness of the drawing sheet	2
TOTAL	**10**

[10]

TOTAL: 100

Copyright reserved