higher education & training

Department:
Higher Education and Training
REPUBLIC OF SOUTH AFRICA

T570**(E)**(J25)T

NATIONAL CERTIFICATE

ENGINEERING DRAWING N1

(8090261)

25 July 2019 (X-Paper)
09:00–13:00

REQUIREMENTS: ONE A2 drawing sheet

This question paper consists of 8 pages.

Copyright reserved

DEPARTMENT OF HIGHER EDUCATION AND TRAINING
REPUBLIC OF SOUTH AFRICA

NATIONAL CERTIFICATE
ENGINEERING DRAWING N1
TIME: 4 HOURS
MARKS: 100

INSTRUCTIONS AND INFORMATION

1. Answer ALL the questions.
2. Read ALL the questions carefully.
3. Number the answers according to the numbering system used in this question paper.
4. Use both sides of the DRAWING SHEET.
5. Draw a 15 mm border on both sides of the DRAWING SHEET.
6. Only the candidate information on the DRAWING SHEET may be done in ink. ALL other drawing work must be done in pencil.
7. ALL drawing work must conform to the latest SANS 10111 Code of Practice for Engineering Drawing.
8. Work neatly.

Copyright reserved

QUESTION 1: GENERAL ENGINEERING-DRAWING TERMS

1.1

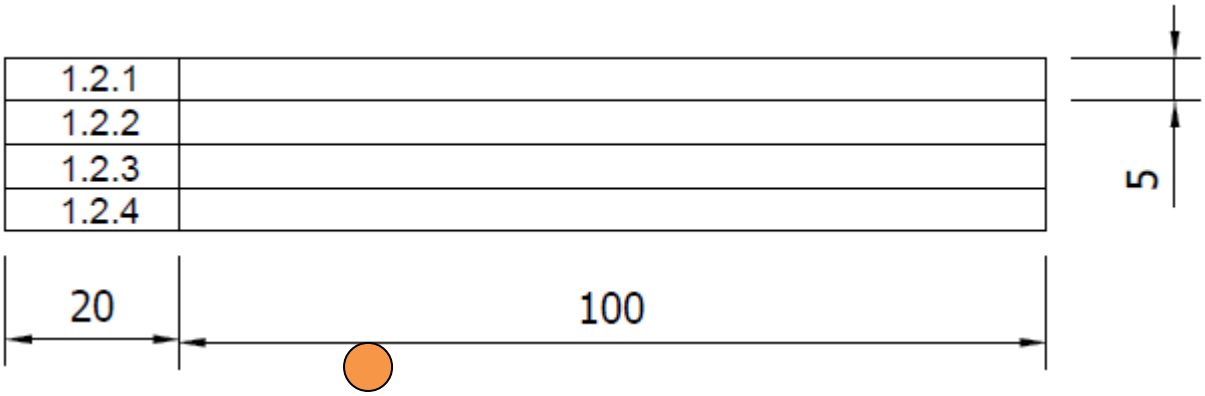

FIGURE 1

Draw, to full size, the answer block shown in FIGURE 1. (1)

1.2 Neatly print the meaning of each of the following abbreviations in the answer block drawn in QUESTION 1.1:

1.2.1 HEX

1.2.2 Ø

1.2.3 CSK

1.2.4 R

(4 × 1) (4)
[5]

QUESTION 2: FREEHAND DRAWING

FIGURE 2 shows a view of a hacksaw.

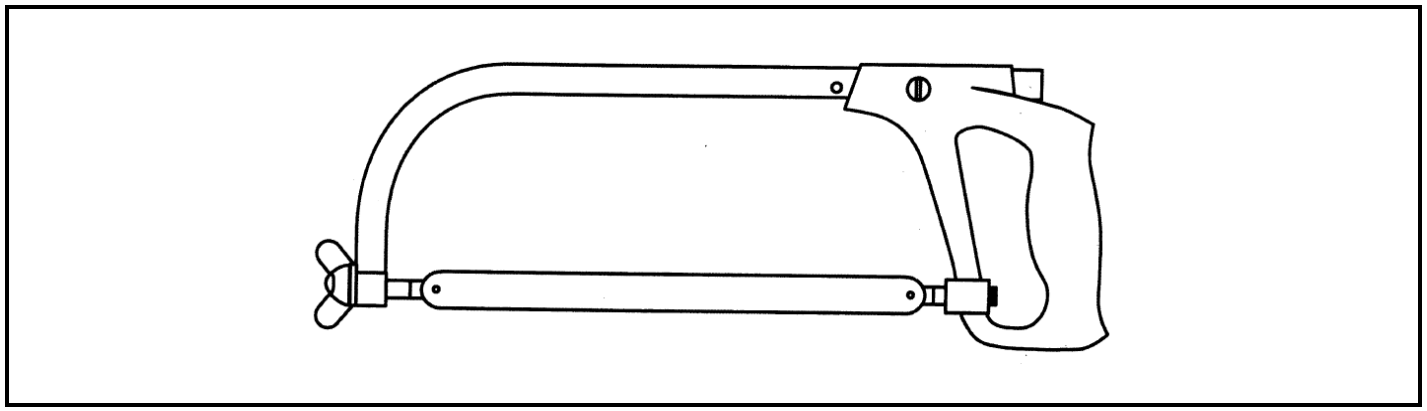

FIGURE 2

Use only a pencil and an eraser to draw the view of the hacksaw in good proportion twice the given size. **[10]**

Copyright reserved

QUESTION 3: REPRODUCTION DRAWING

FIGURE 3 shows a view of a cover plate

3.1 Draw, to scale 1:2, the view of the cover plate. Use the four-centre method to construct the ellipse. Show ALL construction lines. (13)

3.2 Insert any TWO dimensions on the drawing. (1)

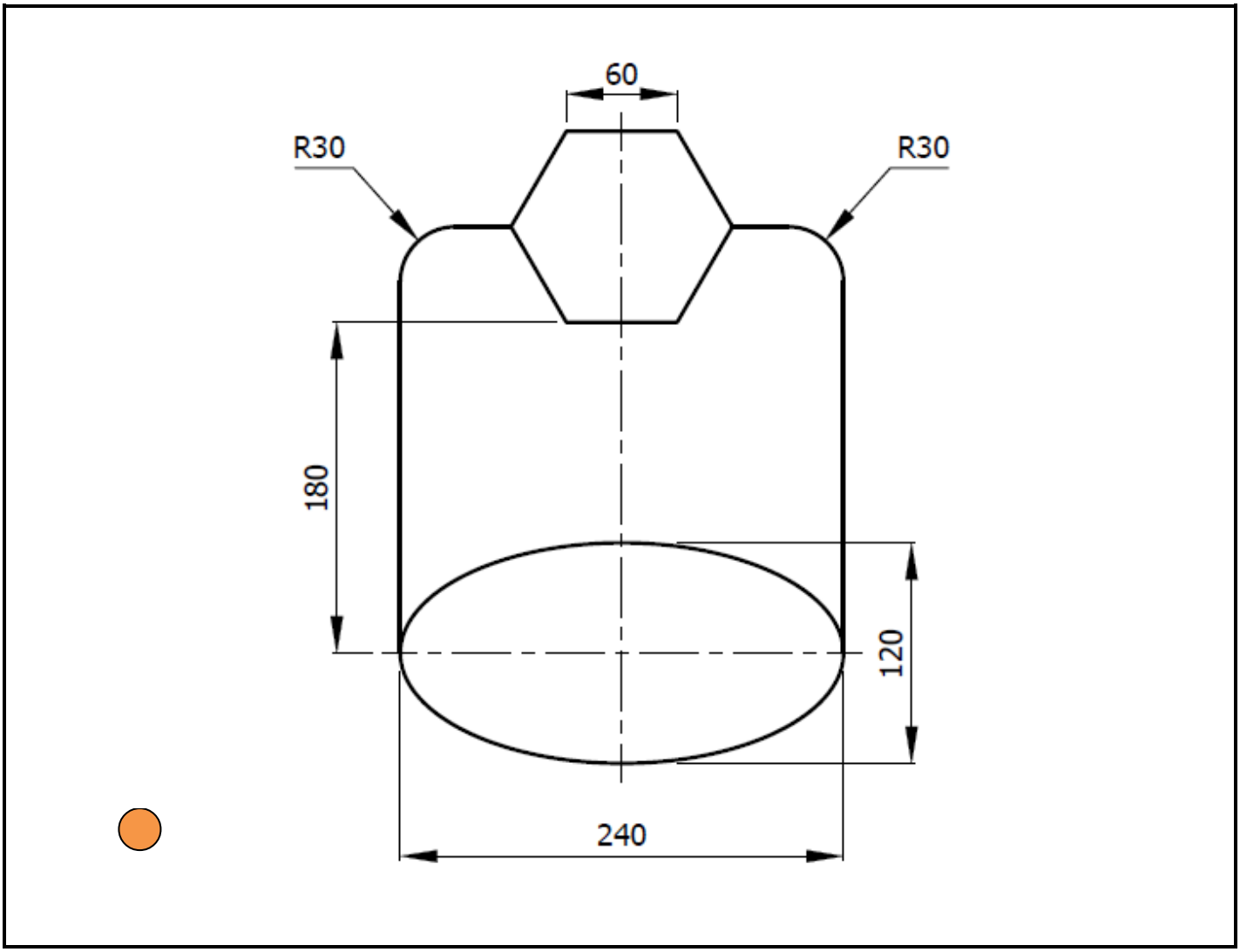

FIGURE 3 **[14]**

Copyright reserved

QUESTION 4: FIRST-ANGLE ORTHOGRAPHIC PROJECTION

FIGURE 4 shows an isometric view of a component.

Draw, to scale 1:1, the following views of the component in first-angle orthographic projection:

4.1 A front view as seen in the direction of arrow F (5)

4.2 A left view as seen in the direction of arrow L (4)

4.3 A top view as seen in the direction of arrow T (5)

4.4 The symbol for first-angle orthographic projection beneath the layout (2)

NO hidden detail is required.

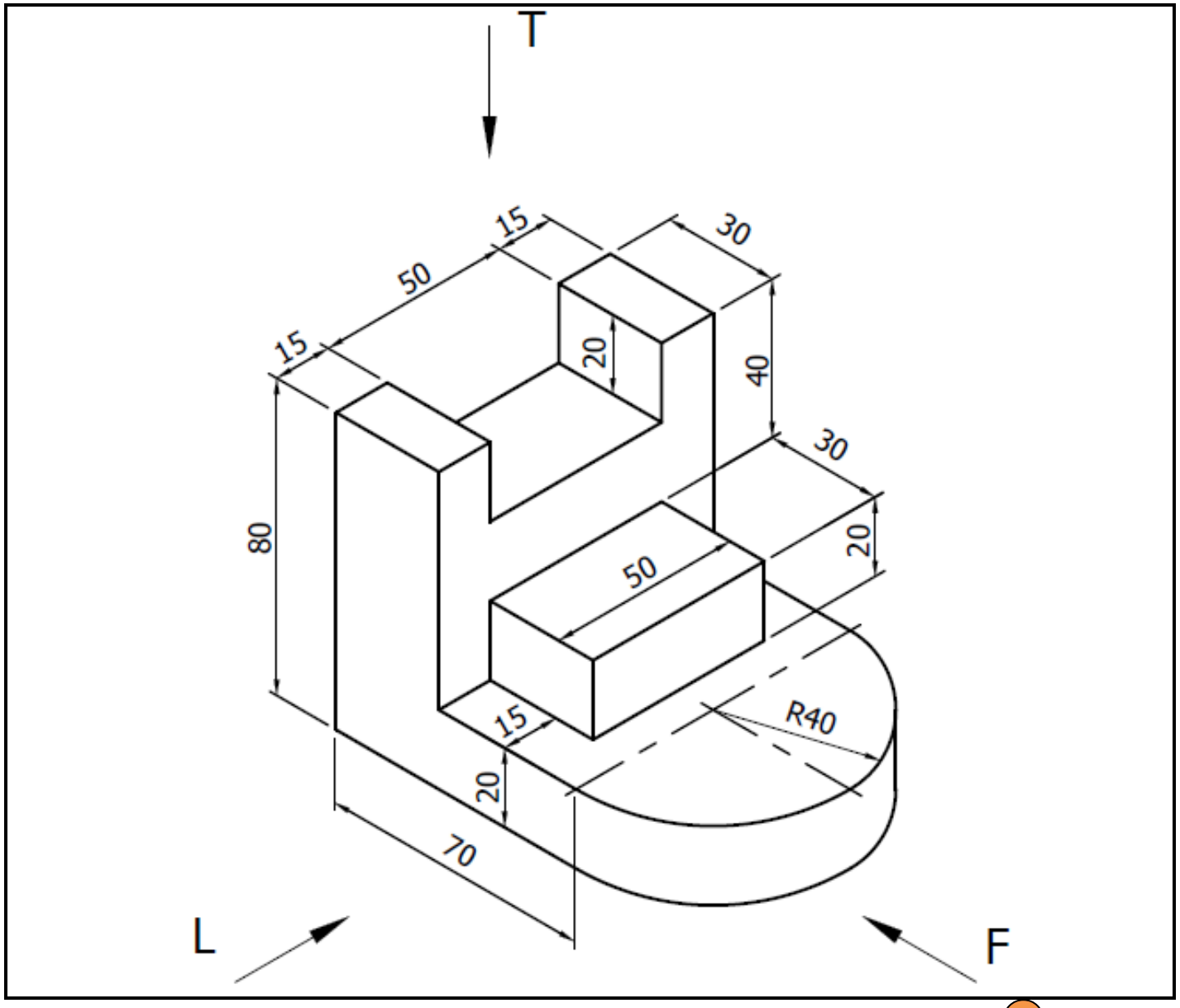

FIGURE 4 **[16]**

QUESTION 5: ISOMETRIC DRAWING

FIGURE 5 shows TWO primary views of a geometric model in first-angle orthographic projection.

Draw, to scale 1:1, an isometric view of the model. Point P must be the lowest point on the drawing. NO hidden detail is required.

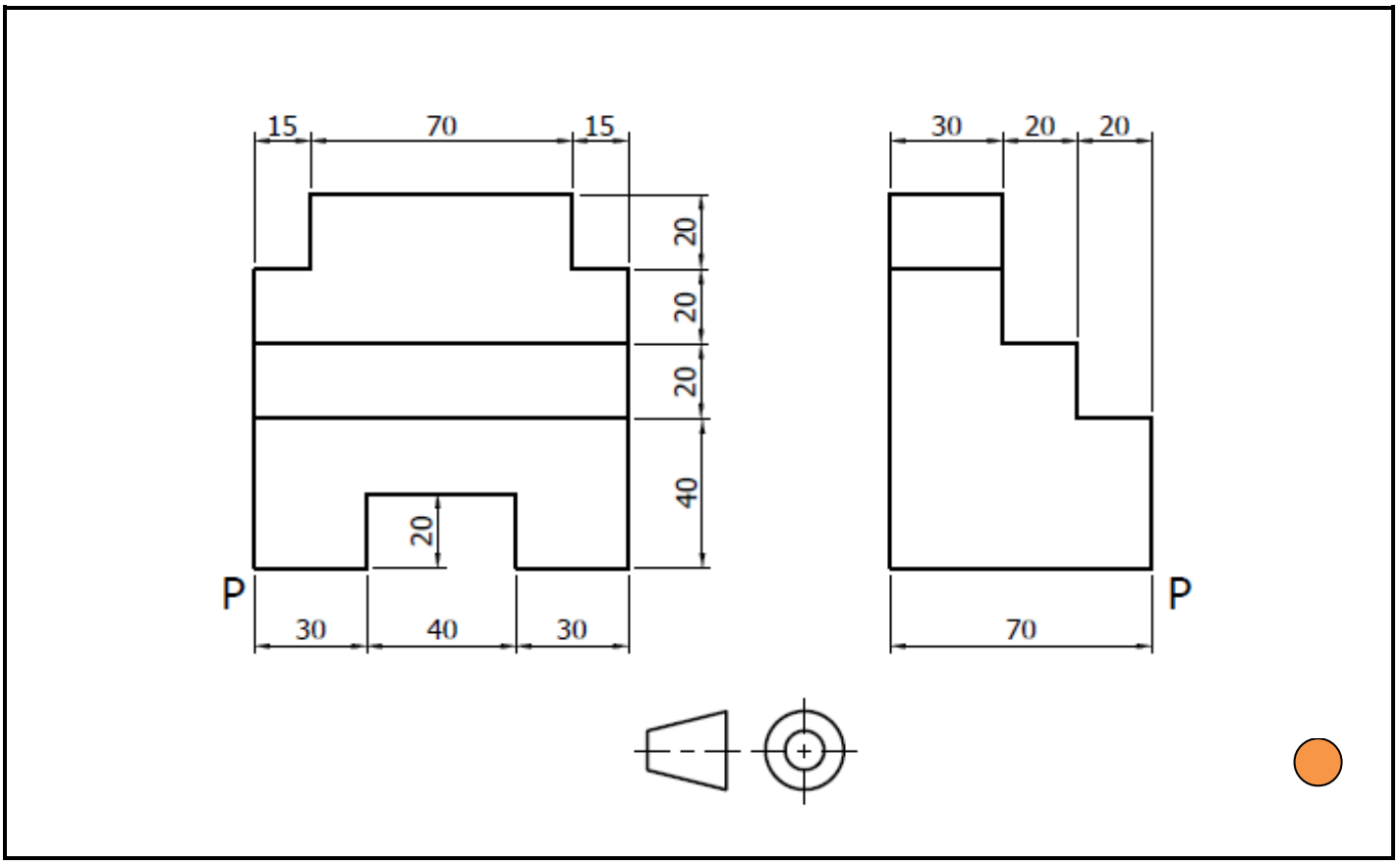

FIGURE 5 **[18]**

Copyright reserved

QUESTION 6: SECTIONAL DRAWING

FIGURE 6 shows TWO primary views of a casting in first-angle orthographic projection.

Draw, to scale 1:1, the following views of the casting in first-angle orthographic projection:

6.1 A full-sectional front view (6)

6.2 A full-sectional left view (5)

6.3 An outside top view (5)

6.4 Print the following title and scale centred beneath the layout:

CASTING
SCALE 1:1 (1)

NO hidden detail is required.

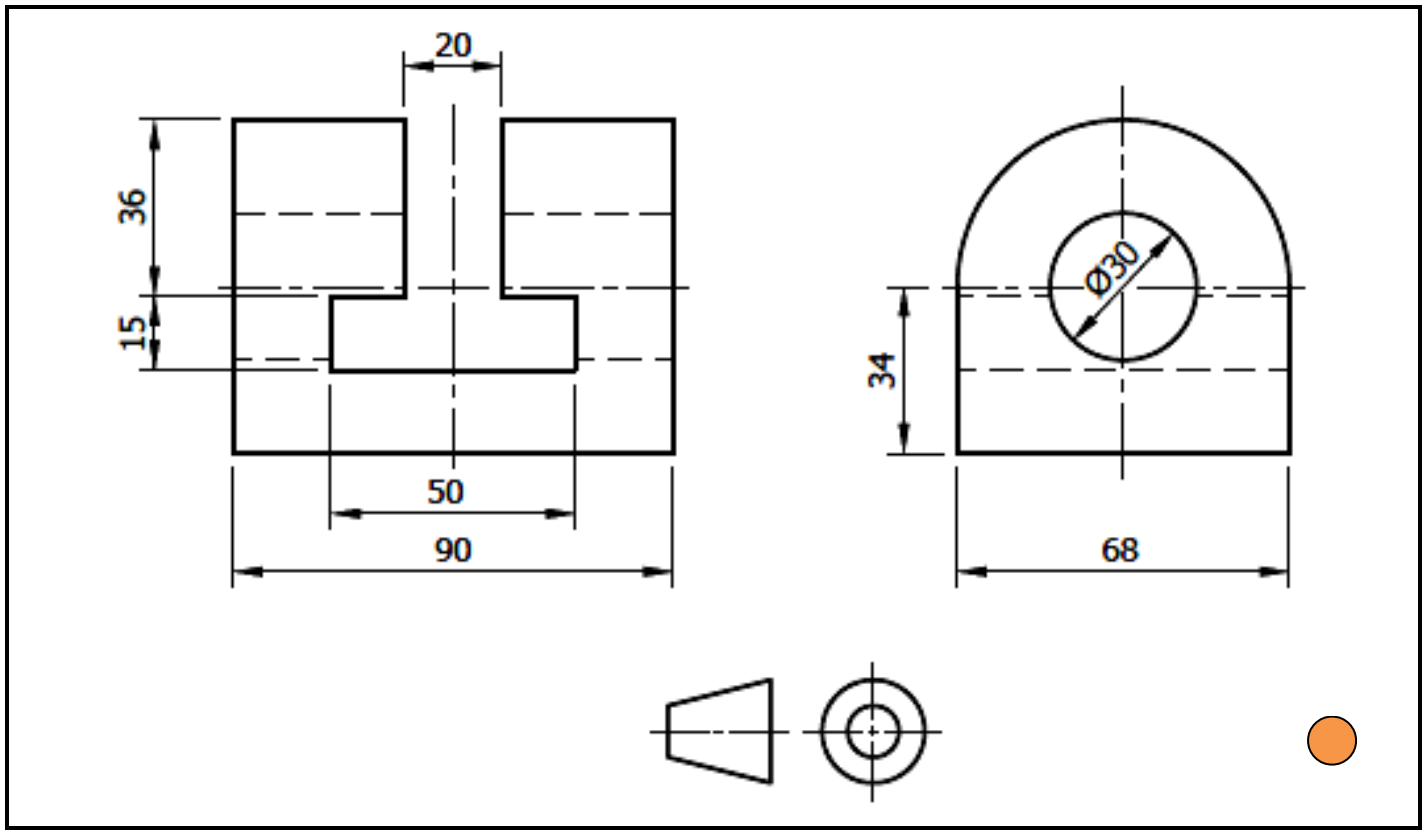

FIGURE 6 **[17]**

Copyright reserved

QUESTION 7: PRISMS AND PYRAMIDS

FIGURE 7 shows the front and auxiliary views of a triangular prism.

Draw, to scale 1:1, the following views of the triangular prism in first-angle orthographic projection:

7.1 The given front and auxiliary views (4)

7.2 A top view as seen in the direction of arrow T (6)

NO hidden detail is necessary.

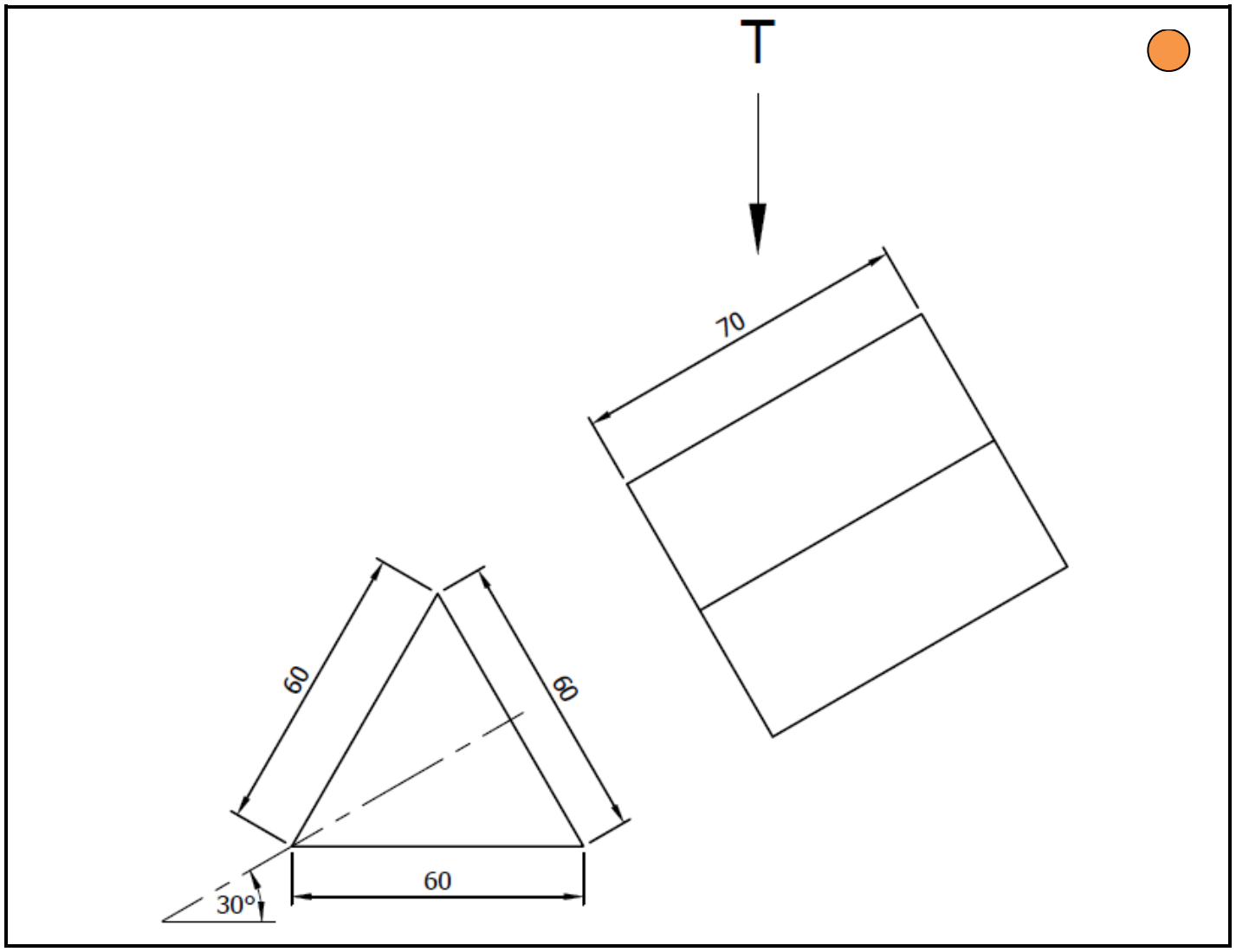

FIGURE 7 **[10]**

QUESTION 8: LAYOUT AND NEATNESS

Balanced layout and neatness of the completed DRAWING SHEET **[10]**

TOTAL: 100

Copyright reserved