higher education & training

Department:
Higher Education and Training
REPUBLIC OF SOUTH AFRICA

MARKING GUIDELINE

NATIONAL CERTIFICATE

ENGINEERING DRAWING N1

26 JULY 2019

This marking guideline consists of 13 pages.

Copyright reserved

INSTRUCTIONS TO MARKERS

1. Copying and scanning of drawings will affect the accuracy of the drawings on the marking guideline.

2. ALL markers are requested to prepare their own marking guideline to use during the marking of candidates' DRAWING SHEETS.

3. √ half mark
   ✓ full mark

QUESTION 1: GENERAL ENGINEERING-DRAWING TERMS

1.1 and 1.2

1.2.1	HEXAGON
1.2.2	DIAMETER
1.2.3	COUNTERSUNK
1.2.4	RADIUS

(4 × 1 + 1 for drawing the block) **[5]**

QUESTION 2: FREEHAND DRAWING

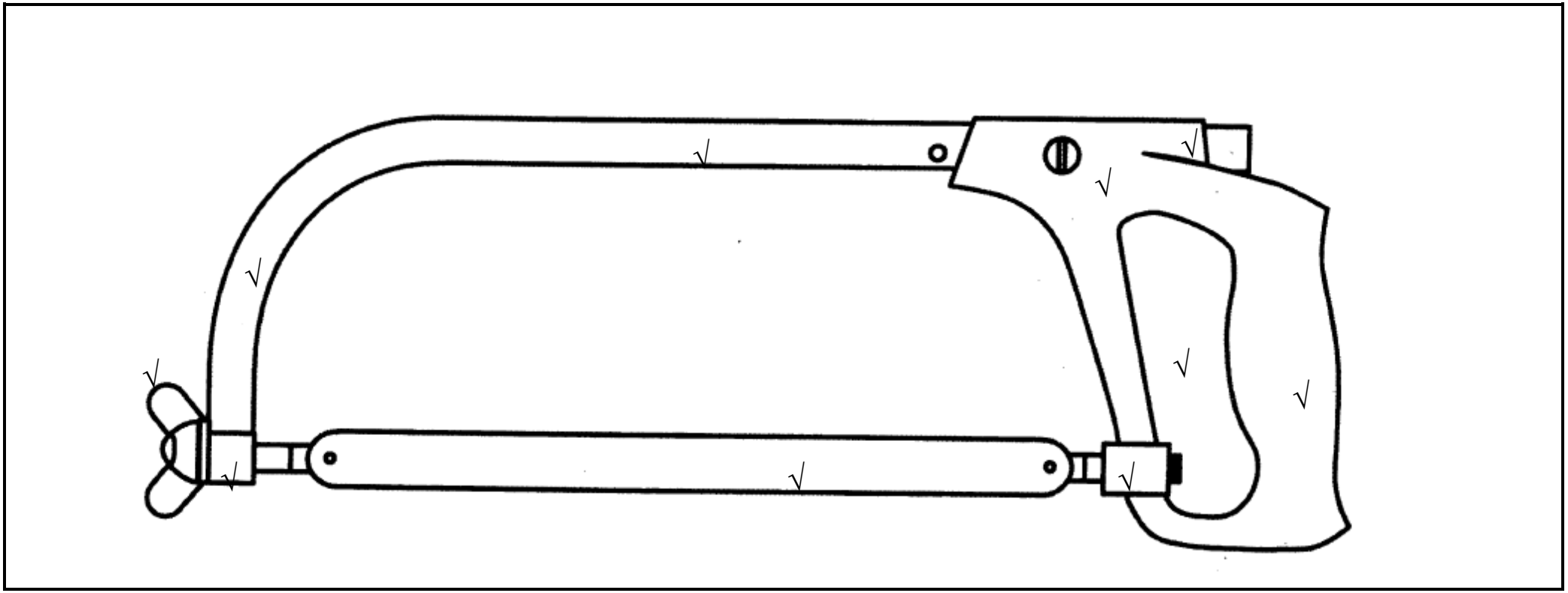

MARK ALLOCATION	
Correctness	5
Line work	3
Accuracy	2

[10]

Copyright reserved

QUESTION 3: REPRODUCTION DRAWING

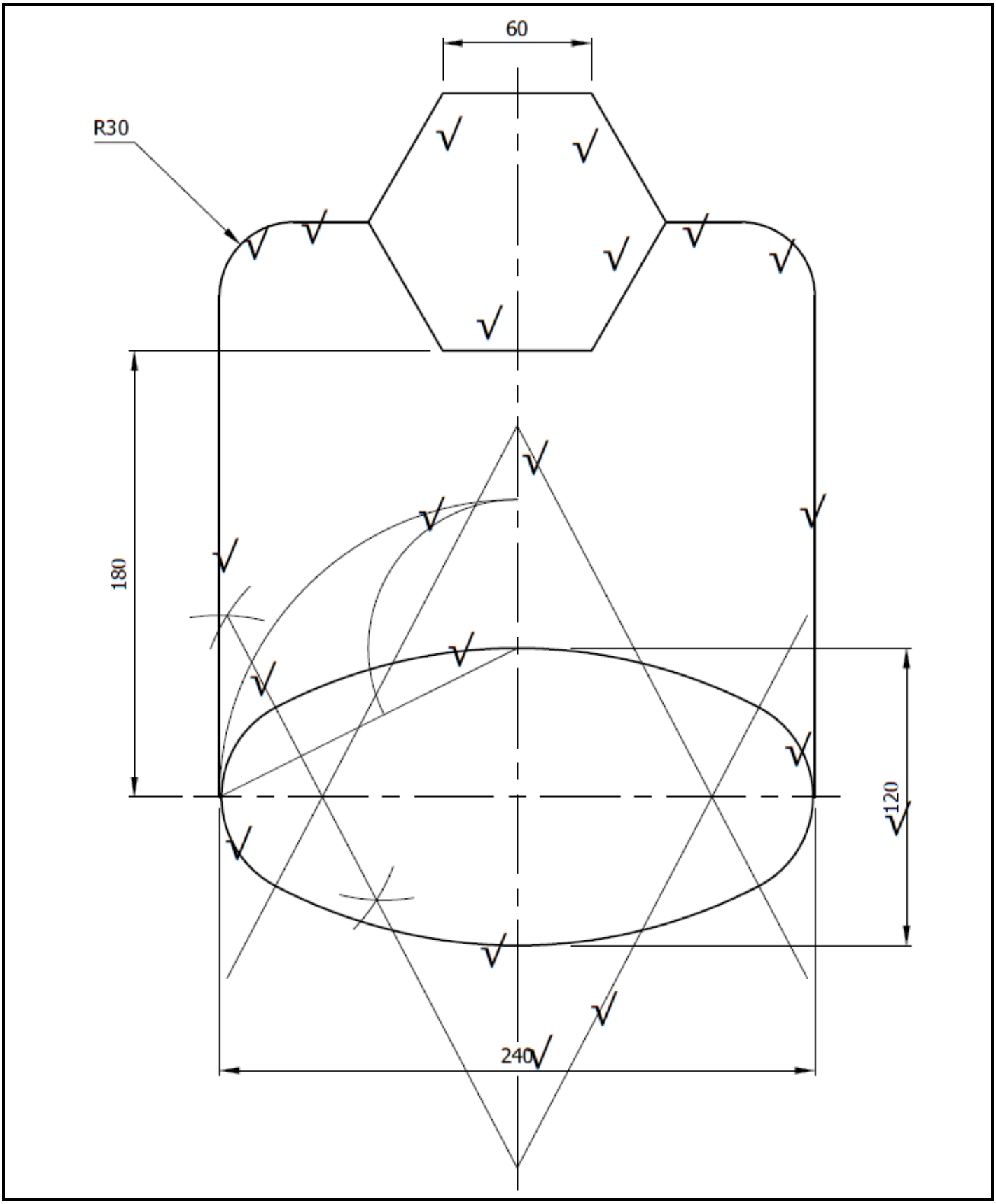

MARK ALLOCATION	
Correctness	9
Line work	2
Accuracy	2
Dimensions	1

MARK ALLOCATION FOR CORRECTNESS		
Construction of the ellipse		**4**
Two construction arcs	½	
Bisecting the line	½	
Constructing the V	½	
Constructing the upside down V	½	
½ mark for each of the four curves forming the ellipse	2	
Construction of the hexagon		**2**
Four straight lines ½ mark each		**2**
Blended arcs ½ mark each		**1**

[14]

QUESTION 4: FIRST-ANGLE ORTHOGRAPHIC PROJECTION

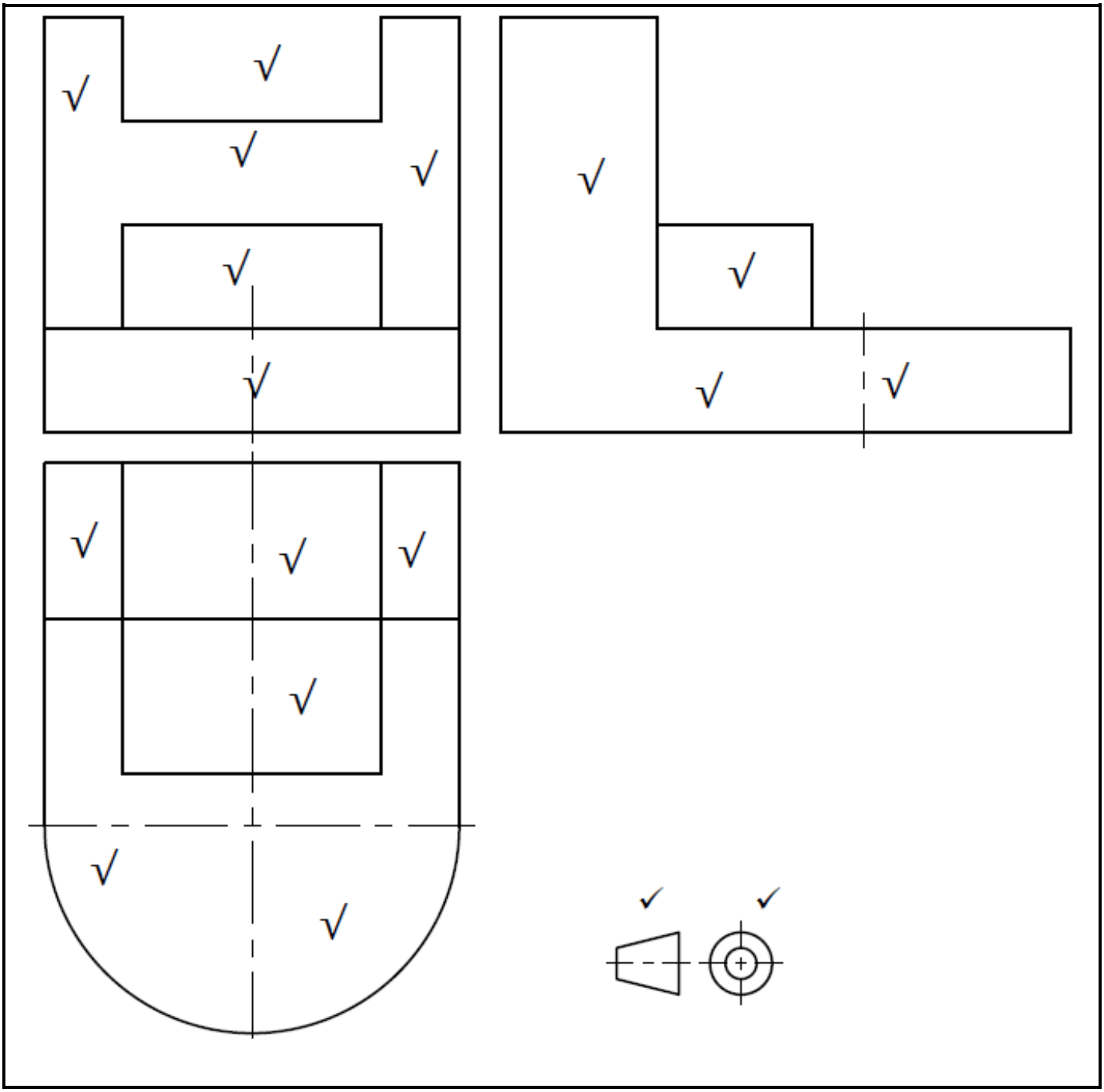

MARK ALLOCATION			
	Front	**Left**	**Top**
Correctness	3	2	3
Line work	1	1	1
Accuracy	1	1	1
Projection symbol	2		

MARK ALLOCATION FOR CORRECTNESS		
Front view		**3**
Front view of the curved portion (seen as a rectangle)	½	
Front view of the block placed on the base	½	
½ mark for each rectangular part of the H	1½	
50 mm slot at the top	½	
Left view		**2**
Left view of the base	1	
Vertical part of the L	½	
Left view of the block placed on the base	½	
Top view		**3**
½ mark for each of the 15 × 30 mm rectangles	1	
Top view of the slot	½	
Top view of the block placed on the base	½	
R40 semicircle	1	

[16]

QUESTION 5: ISOMETRIC DRAWING

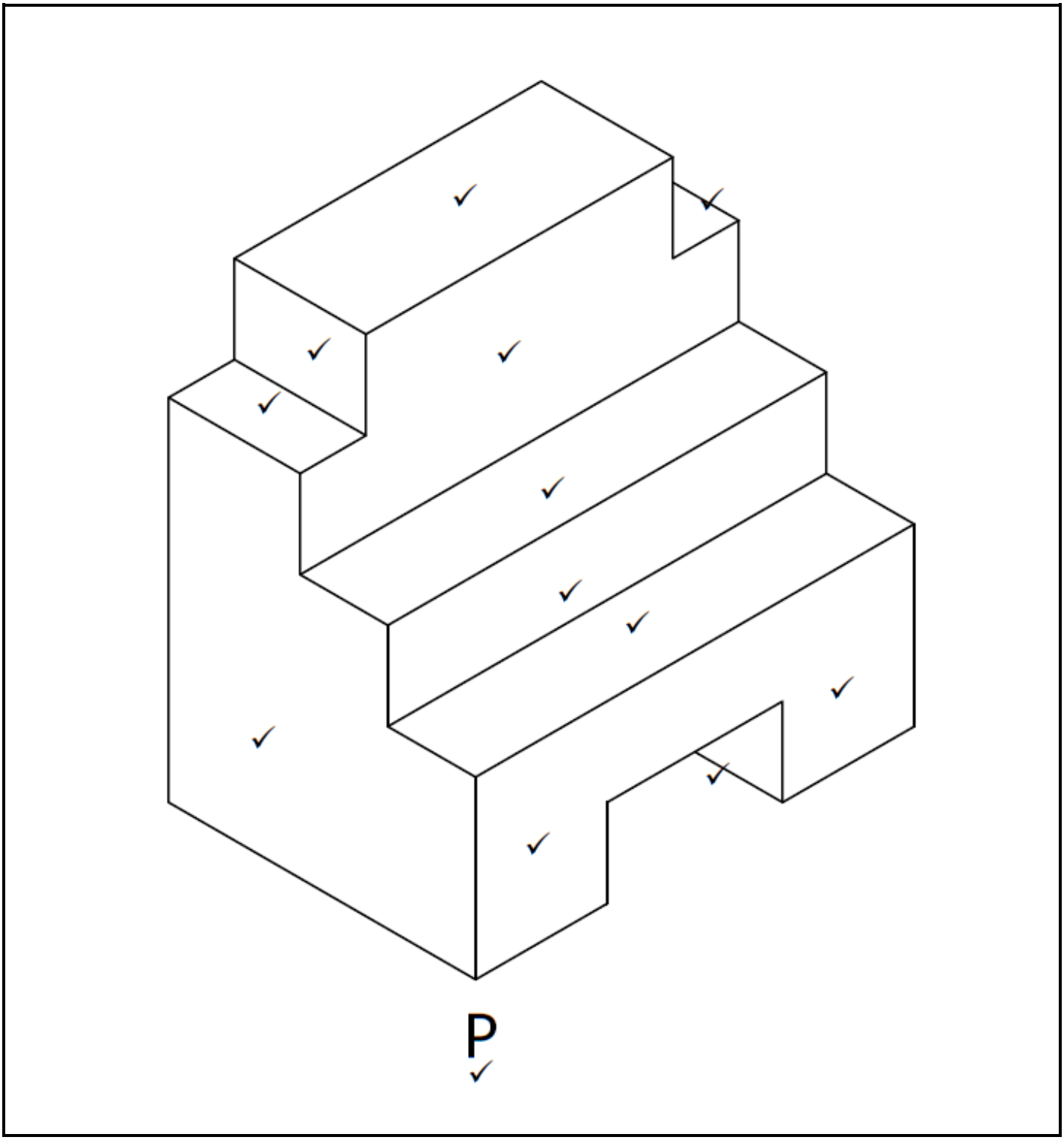

MARK ALLOCATION	
Correctness	12
Line work	3
Accuracy	2
Lowest point P	1

MARK ALLOCATION FOR CORRECTNESS	
Front face	2
Slot	1
Three horizontal faces of the steps	3
Two vertical faces of the steps	2
Two horizontal faces of the shoulder	2
Vertical face of the step	1
Left face	1

[18]

QUESTION 6: SECTIONAL DRAWING

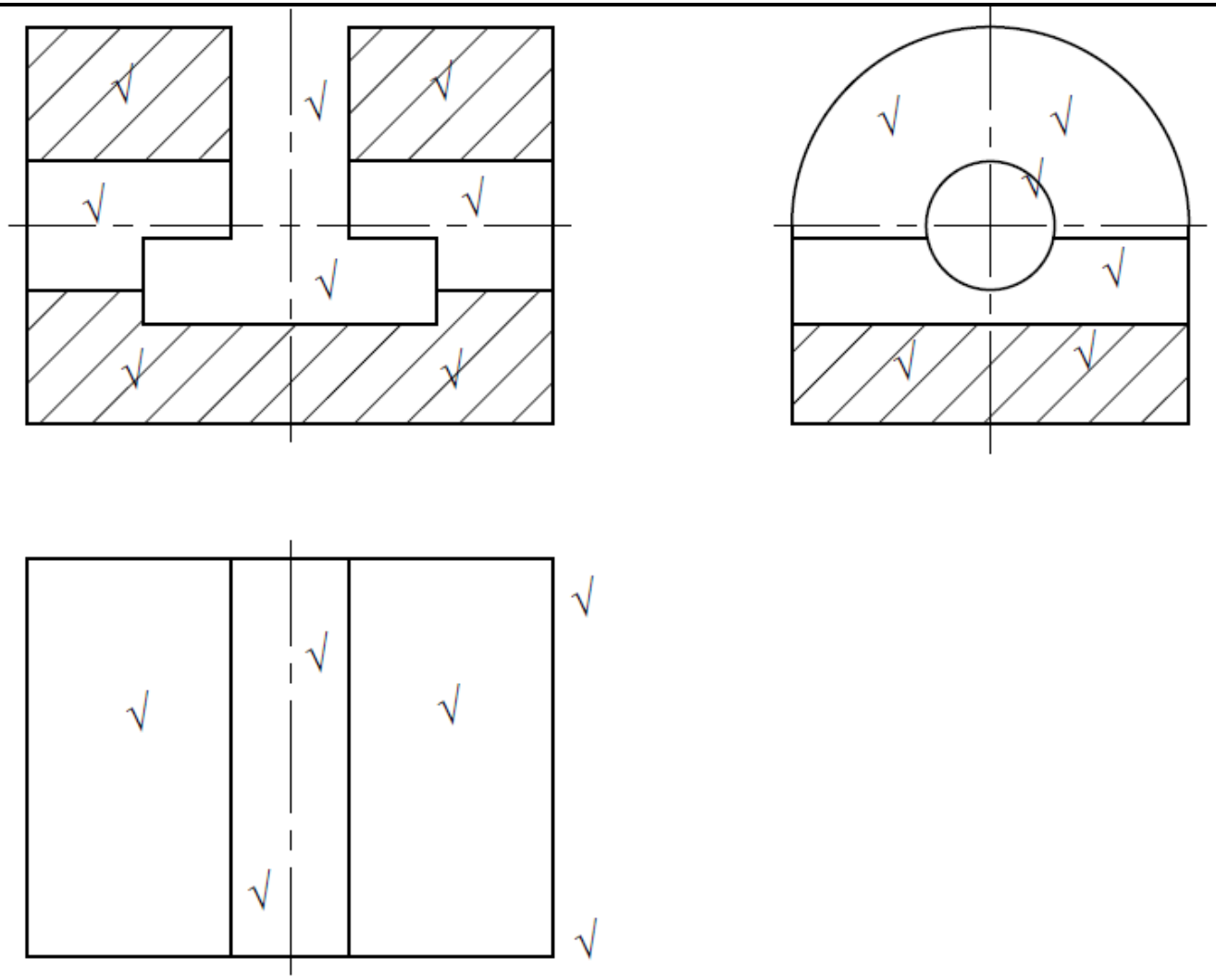

Copyright reserved

MARK ALLOCATION			
	Front	**Left**	**Top**
Correctness	4	3	3
Line work	1	1	1
Accuracy	1	1	1
Title and scale	1		

MARK ALLOCATION FOR CORRECTNESS		
Full-sectional front view		**4**
Correct sectioning of the base	1	
½ mark for each part of the hole not sectioned	1	
½ mark for sectioning each part of the area above the hole	1	
Upside down T-slot	1	
Full-sectional left view		**3**
Correct sectioning of the base	1	
Vertical part of the slot not sectioned	1	
Horizontal line separating the different areas of the T-slot	½	
Hole (circle) not sectioned	½	
Top view		**3**
½ mark for each curved portion (seen as rectangles)	1	
Slot (in the middle of the drawing)	1	
Overall outside shape	1	

[17]

QUESTION 7: PRISMS AND PYRAMIDS

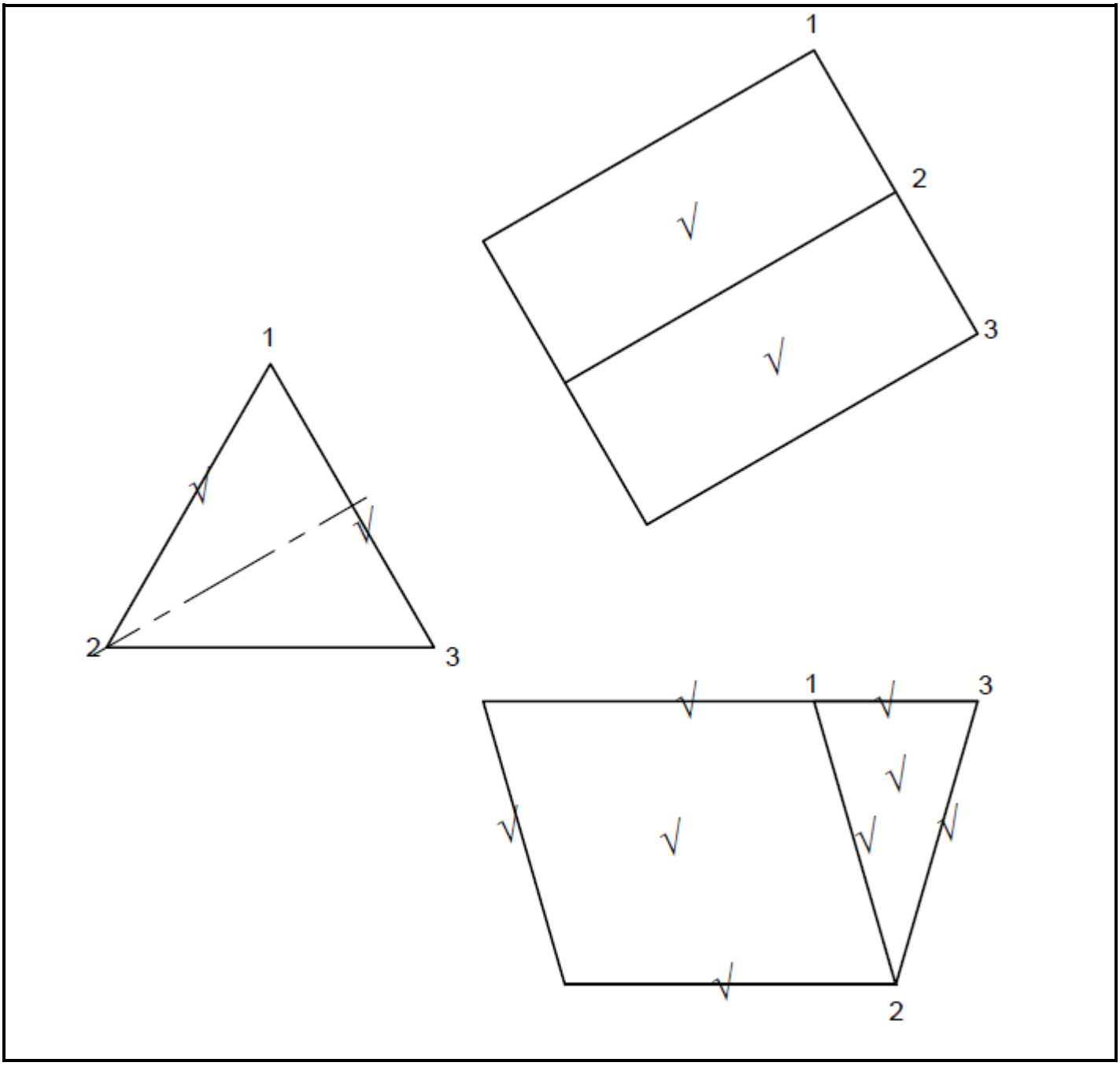

MARK ALLOCATION		
	Front	**Top**
Correctness	2	4
Line work	1	1
Accuracy	1	1

MARK ALLOCATION FOR CORRECTNESS		
Front/Auxiliary views		**2**
1 mark for the triangle on the auxiliary view	1	
1 mark for each side of the triangle on the front view	1	
Top view		**4**
½ mark for each line/part as shown	4	

[10]

QUESTION 8: LAYOUT AND NEATNESS

MARK ALLOCATION FOR BALANCED LAYOUT AND NEATNESS OF THE DRAWING SHEET	
ALL questions answered	1
Questions correctly numbered	1
ALL drawings done in pencil	1
Both sides of the DRAWING SHEET used	1
15 mm border drawn on both sides of the DRAWING SHEET	2
Good planning/Well-spaced out answers	2
General neatness of the DRAWING SHEET	2

[10]

TOTAL: 100

Copyright reserved